FLUME NOTES:

REINFORCING BAR CLEARANCES WILL BE AS FOLLOWS:

EDGE CLEARANCES:	2" EXCEPT
TOP OF FLOOR	$2\frac{1}{4}$" TO NEAR TRANSV. REINF. BAR
BOTTOM OF FLOOR	$3\frac{1}{2}$" TO NEAR TRANSV. REINF. BAR
END CLEARANCES:	
VERTICAL TOP	2"
VERTICAL BOTTOM	$3\frac{1}{2}$"
TRANSVERSE	2"

FLOOR OF FLUME IS TO BE FINISHED SMOOTH. SIDES OF FOOTING ARE TO BE FORMED TO INSURE CORRECT LINE AND GRADE.

ALL FLOOR REINFORCING STEEL IS TO BE SUPPORTED AT INTERVALS OF NOT MORE THAN 3'-0 IN EITHER DIRECTION AS OUTLINED IN THE STANDARD SPECIFICATIONS.

THE VERTICAL BARS IN THE WALLS MAY BE SPLICED ABOVE THE FOOTING AT THE CONTRACTOR'S OPTION AS FOLLOWS:

BAR SIZE NUMBER	4	5	6	7	8
MINIMUM SPLICE LENGTH	21"	26"	31"	41"	54"

THIS SPLICE, IF USED WILL BE AT THE CONTRACTOR'S EXPENSE.

BEVELED 2x4 KEYWAYS ARE TO BE USED FOR 9" AND 10" WALLS AND 2x6 KEYWAYS ARE USED FOR 11" AND GREATER WALL THICKNESS.

KEYWAY DIMENSIONS SHOWN ON THE PLANS ARE BASED ON NOMINAL DIMENSIONS UNLESS STATED OTHERWISE. IN ADDITION, THE BEVEL USED ON THE KEYWAY SHALL BE LIMITED TO A MAXIMUM OF 10 DEGREES FROM VERTICAL.

GENERAL CONSIDERATIONS:

THE FLUME STANDARDS, WHEN USED IN COMBINATION WITH A PROPERLY COMPLETED SITUATION PLAN AND THE APPROPRIATE STANDARD SHEET 1070 SERIES WILL PROVIDE STRUCTURAL PLANS AND THE FLUME "ESTIMATED PROJECT QUANTITIES".

SPECIFICATIONS:

DESIGN:

AASHTO LRFD BRIDGE DESIGN SPECIFICATIONS, 5TH ED., SERIES OF 2010.

CONSTRUCTION:

IOWA DEPARTMENT OF TRANSPORTATION STANDARD SPECIFICATIONS FOR HIGHWAY AND BRIDGE CONSTRUCTION, CURRENT SERIES, PLUS APPLICABLE GENERAL SUPPLEMENTAL SPECIFICATIONS, DEVELOPMENTAL SPECIFICATIONS, SUPPLEMENTAL SPECIFICATIONS AND SPECIAL PROVISIONS

DESIGN STRESSES:

DESIGN STRESSES FOR THE FOLLOWING MATERIALS ARE IN ACCORDANCE WITH THE AASHTO LRFD BRIDGE DESIGN SPECIFICATIONS, 5TH ED., SERIES OF 2010:

REINFORCING STEEL IN ACCORDANCE WITH AASHTO LRFD SECTION 5, GRADE 60.

CONCRETE IN ACCORDANCE WITH AASHTO LRFD SECTION 5, f'c = 4.0 KSI.

TABLE OF FLUME DIMENSIONS

S x H	K	M	V (3:1)	V (4:1)	L	N	O	P	R	T	U
3'x3'	9'-6	2'-3	2'-4½	2'-3⅞	13'-0	2'-0	1'-1	3'-6	0'-9	0'-11	0'-9
4'x4'	11'-0	3'-0	3'-2	3'-1⅛	14'-0	2'-3	1'-10	3'-6	1'-0	0'-11	0'-9
5'x3'	11'-6	2'-3	2'-4½	2'-3⅞	13'-0	2'-0	1'-1	3'-6	0'-9	0'-11	0'-9
5'x4'	12'-0	3'-0	3'-2	3'-1⅛	14'-0	2'-3	1'-10	3'-6	1'-0	0'-11	0'-9
5'x5'	12'-6	3'-9	3'-11⅜	3'-10⅜	15'-0	2'-6	2'-7	3'-6	1'-0	0'-11	0'-9
5'x6'	13'-0	4'-6	4'-8⅞	4'-7⅝	16'-0	2'-9	3'-5	3'-6	1'-3	0'-11	0'-9
6'x3'	12'-6	2'-3	2'-4½	2'-3⅞	13'-0	2'-0	1'-1	3'-6	0'-9	0'-11	0'-9
6'x4'	13'-0	3'-0	3'-2	3'-1⅛	14'-0	2'-3	1'-10	3'-6	1'-0	0'-11	0'-9
6'x5'	13'-6	3'-9	3'-11⅜	3'-10⅜	15'-0	2'-6	2'-7	3'-6	1'-0	0'-11	0'-9
6'x6'	14'-0	4'-6	4'-8⅞	4'-7⅝	16'-0	2'-9	3'-5	3'-6	1'-3	0'-11	0'-9
6'x7'	14'-6	5'-3	5'-6⅜	5'-5	17'-0	3'-0	4'-2	3'-9	1'-3	0'-11	0'-9
6'x8'	15'-0	6'-0	6'-3⅞	6'-2¼	18'-0	3'-3	4'-11	4'-0	1'-3	0'-11	0'-10
8'x4'	15'-0	3'-0	3'-2	3'-1⅛	14'-0	2'-3	1'-10	3'-6	1'-0	1'-0	0'-9
8'x5'	15'-6	3'-9	3'-11⅜	3'-10⅜	15'-0	2'-6	2'-7	3'-6	1'-0	1'-0	0'-9
8'x6'	16'-0	4'-6	4'-8⅞	4'-7⅝	16'-0	2'-9	3'-5	3'-6	1'-3	1'-0	0'-9
8'x7'	16'-6	5'-3	5'-6⅜	5'-5	17'-0	3'-0	4'-2	3'-9	1'-3	1'-0	0'-9
8'x8'	17'-0	6'-0	6'-3⅞	6'-2¼	18'-0	3'-3	4'-11	4'-0	1'-3	1'-0	0'-10
8'x9'	17'-6	6'-9	7'-1⅜	6'-11½	19'-0	3'-6	5'-8	4'-3	1'-3	1'-0	0'-10
8'x10'	18'-0	7'-6	7'-10⅞	7'-8¾	20'-0	3'-9	6'-6	4'-6	1'-3	1'-0	0'-10
10'x4'	17'-0	3'-0	3'-2	3'-1⅛	14'-0	2'-3	1'-10	3'-6	1'-0	1'-1	0'-9
10'x5'	17'-6	3'-9	3'-11⅜	3'-10⅜	15'-0	2'-6	2'-7	3'-6	1'-0	1'-1	0'-9
10'x6'	18'-0	4'-6	4'-8⅞	4'-7⅝	16'-0	2'-9	3'-5	3'-6	1'-3	1'-1	0'-9
10'x7'	18'-6	5'-3	5'-6⅜	5'-5	17'-0	3'-0	4'-2	3'-9	1'-3	1'-1	0'-9
10'x8'	19'-0	6'-0	6'-3⅞	6'-2¼	18'-0	3'-3	4'-11	4'-0	1'-3	1'-1	0'-10
10'x9'	19'-6	6'-9	7'-1⅜	6'-11½	19'-0	3'-6	5'-8	4'-3	1'-3	1'-1	0'-10
10'x10'	20'-0	7'-6	7'-10⅞	7'-8¾	20'-0	3'-9	6'-6	4'-6	1'-3	1'-1	0'-10
10'x11'	20'-6	8'-3	8'-8⅜	8'-6	21'-0	4'-0	7'-3	4'-9	1'-3	1'-1	0'-11
10'x12'	21'-0	9'-0	9'-5⅞	9'-3⅜	22'-0	4'-3	8'-0	5'-0	1'-3	1'-1	1'-0
12'x4'	19'-0	3'-0	3'-2	3'-1⅛	14'-0	2'-3	1'-10	3'-6	1'-0	1'-2	0'-9
12'x5'	19'-6	3'-9	3'-11⅜	3'-10⅜	15'-0	2'-6	2'-7	3'-6	1'-0	1'-2	0'-9
12'x6'	20'-0	4'-6	4'-8⅞	4'-7⅝	16'-0	2'-9	3'-5	3'-6	1'-3	1'-2	0'-9
12'x7'	20'-6	5'-3	5'-6⅜	5'-5	17'-0	3'-0	4'-2	3'-9	1'-3	1'-2	0'-9
12'x8'	21'-0	6'-0	6'-3⅞	6'-2¼	18'-0	3'-3	4'-11	4'-0	1'-3	1'-2	0'-10
12'x9'	21'-6	6'-9	7'-1⅜	6'-11½	19'-0	3'-6	5'-8	4'-3	1'-3	1'-2	0'-10
12'x10'	22'-0	7'-6	7'-10⅞	7'-8¾	20'-0	3'-9	6'-6	4'-6	1'-3	1'-2	0'-10
12'x11'	22'-6	8'-3	8'-8⅜	8'-6	21'-0	4'-0	7'-3	4'-9	1'-3	1'-2	0'-11
12'x12'	23'-0	9'-0	9'-5⅞	9'-3⅜	22'-0	4'-3	8'-0	5'-0	1'-3	1'-2	1'-0

TABLE OF FLUME CONCRETE (CY)

CULV. SIZE	3:1 SLOPE FLUME						4:1 SLOPE FLUME					
	L3 TOTAL		L2 PER FOOT		STUB	BASIN	L3 TOTAL		L2 PER FOOT		STUB	BASIN
S x H	WALLS	FOOTING	WALLS	FOOTING	CURTAIN	CURTAIN	WALLS	FOOTING	WALLS	FOOTING	CURTAIN	CURTAIN
3'x3'	3.1	4.0	0.112	0.220	0.4	0.1	4.3	5.5	0.110	0.215	0.4	0.1
4'x4'	4.3	5.0	0.156	0.256	0.6	0.2	5.9	6.8	0.153	0.250	0.6	0.2
5'x3'	3.1	5.3	0.112	0.292	0.5	0.2	4.3	7.2	0.110	0.285	0.5	0.2
5'x4'	4.3	5.6	0.156	0.292	0.7	0.3	5.9	7.8	0.153	0.285	0.7	0.3
5'x5'	5.6	6.0	0.200	0.292	0.7	0.4	7.8	8.3	0.196	0.285	0.7	0.3
5'x6'	7.1	6.4	0.244	0.292	0.9	0.5	9.8	8.9	0.239	0.285	0.9	0.5
6'x3'	3.1	5.9	0.112	0.328	0.6	0.2	4.3	8.1	0.110	0.320	0.6	0.2
6'x4'	4.3	6.3	0.156	0.328	0.8	0.3	5.9	8.7	0.153	0.320	0.8	0.3
6'x5'	5.6	6.8	0.200	0.328	0.8	0.4	7.8	9.3	0.196	0.320	0.8	0.4
6'x6'	7.1	7.2	0.244	0.328	1.0	0.6	9.8	10.0	0.239	0.320	1.0	0.6
6'x7'	8.6	7.6	0.288	0.328	1.1	0.7	11.9	10.6	0.282	0.320	1.1	0.7
6'x8'	11.4	8.9	0.369	0.362	1.2	0.8	15.9	12.4	0.360	0.354	1.2	0.8
8'x4'	4.3	8.4	0.156	0.432	1.0	0.4	5.9	11.5	0.153	0.422	1.0	0.4
8'x5'	5.6	8.9	0.200	0.432	1.0	0.5	7.8	12.3	0.196	0.422	1.0	0.5
8'x6'	7.1	9.5	0.244	0.432	1.2	0.7	9.8	13.1	0.239	0.422	1.2	0.7
8'x7'	8.6	10.0	0.288	0.432	1.3	0.8	11.9	13.9	0.282	0.422	1.3	0.8
8'x8'	11.4	10.8	0.369	0.440	1.5	1.0	15.9	15.0	0.360	0.431	1.5	1.0
8'x9'	13.5	11.3	0.417	0.440	1.6	1.1	18.7	15.9	0.408	0.431	1.6	1.1
8'x10'	15.6	11.9	0.466	0.440	1.7	1.2	21.8	16.7	0.456	0.431	1.7	1.2
10'x4'	4.3	10.6	0.156	0.549	1.1	0.4	5.9	14.6	0.153	0.537	1.1	0.4
10'x5'	5.6	11.3	0.200	0.549	1.1	0.5	7.8	15.7	0.196	0.537	1.1	0.5
10'x6'	7.1	12.0	0.244	0.549	1.4	0.8	9.8	16.7	0.239	0.537	1.4	0.8
10'x7'	8.6	12.7	0.288	0.549	1.6	1.0	11.9	17.7	0.282	0.537	1.6	0.9
10'x8'	11.4	13.7	0.369	0.558	1.7	1.1	15.9	19.1	0.360	0.546	1.7	1.1
10'x9'	13.5	14.4	0.417	0.558	1.9	1.3	18.7	20.1	0.408	0.546	1.9	1.2
10'x10'	15.6	15.1	0.466	0.558	2.0	1.4	21.8	21.1	0.456	0.546	2.0	1.4
10'x11'	19.7	16.1	0.567	0.567	2.2	1.6	27.5	22.5	0.554	0.555	2.2	1.5
10'x12'	24.4	17.1	0.677	0.576	2.4	1.7	34.2	24.0	0.662	0.564	2.3	1.7
12'x4'	4.3	13.1	0.156	0.679	1.3	0.4	5.9	18.1	0.153	0.664	1.3	0.4
12'x5'	5.6	14.0	0.200	0.679	1.3	0.6	7.8	19.4	0.196	0.664	1.3	0.6
12'x6'	7.1	14.9	0.244	0.679	1.6	0.9	9.8	20.7	0.239	0.664	1.6	0.9
12'x7'	8.6	15.8	0.288	0.679	1.8	1.1	11.9	21.9	0.282	0.664	1.8	1.1
12'x8'	11.4	16.9	0.369	0.689	2.0	1.2	15.9	23.5	0.360	0.674	1.9	1.2
12'x9'	13.5	17.7	0.417	0.689	2.1	1.4	18.7	24.8	0.408	0.674	2.1	1.4
12'x10'	15.6	18.6	0.466	0.689	2.3	1.6	21.8	26.1	0.456	0.674	2.3	1.6
12'x11'	19.7	19.8	0.567	0.699	2.5	1.8	27.5	27.8	0.554	0.683	2.5	1.7
12'x12'	24.4	21.0	0.677	0.708	2.7	1.9	34.2	29.5	0.662	0.693	2.7	1.9

NOTE: L3 CONCRETE QUANTITIES ASSUME A 1°00' ANGLE 'C'.

S = CULVERT SPAN
H = CULVERT HEIGHT

TABLE OF FLUME REINFORCING

FLUME SPAN					
S \ BAR	c1, c2	f1	f2	h1	m1
3'-0	5 @ 1'-0	6 @ 1'-0	5 @ 1'-0	5 @ 1'-0	6 @ 1'-0
4'-0	5 @ 1'-0	6 @ 1'-0	5 @ 1'-0	5 @ 1'-0	6 @ 1'-0
5'-0	5 @ 0'-6	6 @ 1'-0	5 @ 1'-0	5 @ 1'-0	6 @ 1'-0
6'-0	5 @ 0'-6	6 @ 1'-0	5 @ 1'-0	5 @ 1'-0	6 @ 1'-0
8'-0	6 @ 0'-6	6 @ 1'-0	5 @ 1'-0	5 @ 1'-0	6 @ 1'-0
10'-0	7 @ 0'-6	6 @ 1'-0	5 @ 1'-0	5 @ 1'-0	6 @ 1'-0
12'-0	7 @ 0'-6	6 @ 1'-0	5 @ 1'-0	5 @ 1'-0	6 @ 1'-0

FLUME HEIGHT					
H \ BAR	a1	b1	b2	c3	s1
3'-0	4 @ 1'-0	5 @ 1'-0	4 @ 1'-0	---	#5
4'-0	4 @ 1'-0	5 @ 1'-0	4 @ 1'-0	5 @ 1'-0	#5
5'-0	4 @ 1'-0	5 @ 1'-0	4 @ 1'-0	5 @ 0'-6	#5
6'-0	4 @ 1'-0	5 @ 1'-0	4 @ 1'-0	5 @ 0'-6	#6
7'-0	5 @ 1'-0	5 @ 1'-0	4 @ 1'-0	5 @ 0'-6	#6
8'-0	5 @ 1'-0	5 @ 1'-0	4 @ 1'-0	5 @ 0'-6	#6
9'-0	4 @ 0'-6	5 @ 1'-0	4 @ 1'-0	5 @ 0'-6	#6
10'-0	5 @ 0'-6	5 @ 1'-0	4 @ 1'-0	6 @ 0'-6	#6
11'-0	5 @ 0'-6	5 @ 1'-0	4 @ 1'-0	7 @ 0'-6	#6
12'-0	5 @ 0'-6	5 @ 1'-0	4 @ 1'-0	7 @ 0'-6	#6

NOTE:

THE RESPECTIVE BAR SIZE AND SPACING SHOULD BE USED FOR APPROPRIATE FLUME SIZE WHEN THE SPAN AND HEIGHT ARE DIFFERENT.

05-13
LATEST REVISION DATE

APPROVED BY BRIDGE ENGINEER

IOWADOT Highway Division

STANDARD DESIGN

REINFORCED CONCRETE BOX CULVERTS

APRIL, 2012

REINFORCED CONCRETE FLUME DETAILS

QUANTITIES AND NOTES

RCF-01-12

REVISED 05-13 - ADDED c3 BARS TO THE 4'-0 HEIGHT IN THE 'TABLE OF FLUME REINFORCING'.
ENGLISHSIGNEDFLUMES.DGN - RCF-01-12 - THIS SHEET ISSUED 04-12.

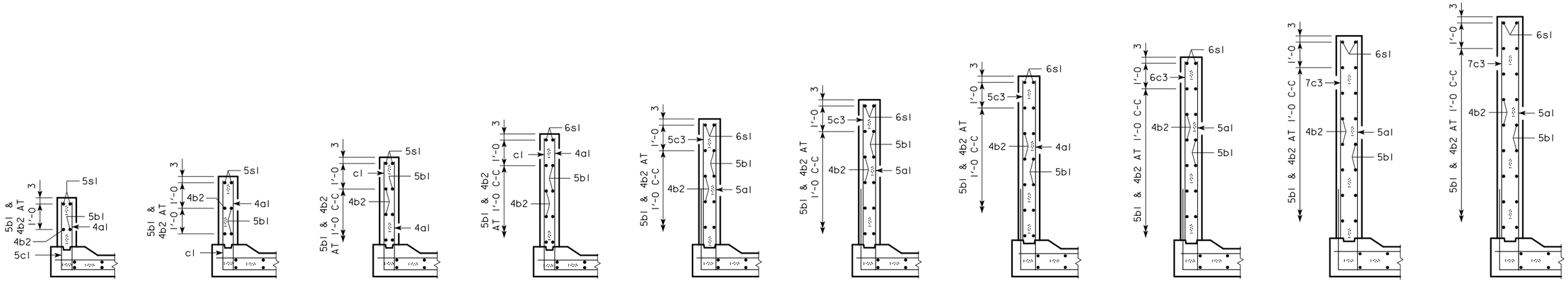

FLUME WALL SECTIONS
(NORMAL TO FLOWLINE)

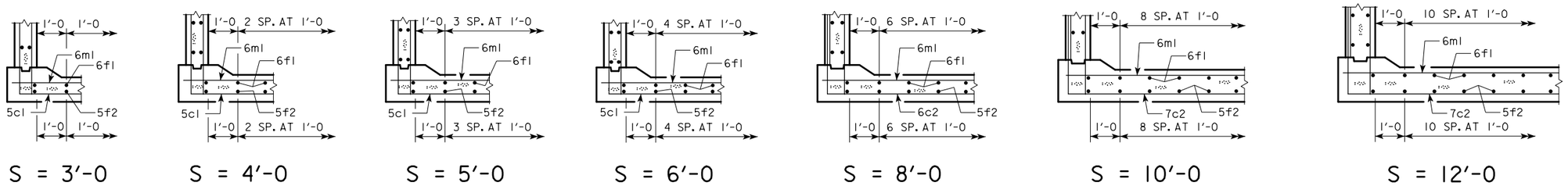

FLUME FLOOR HALF SECTIONS
(NORMAL TO FLOWLINE)

NOTE: MIX AND MATCH DETAILED FLOORS AND DETAILED WALLS FOR APPROPRIATE FLUME SIZE.

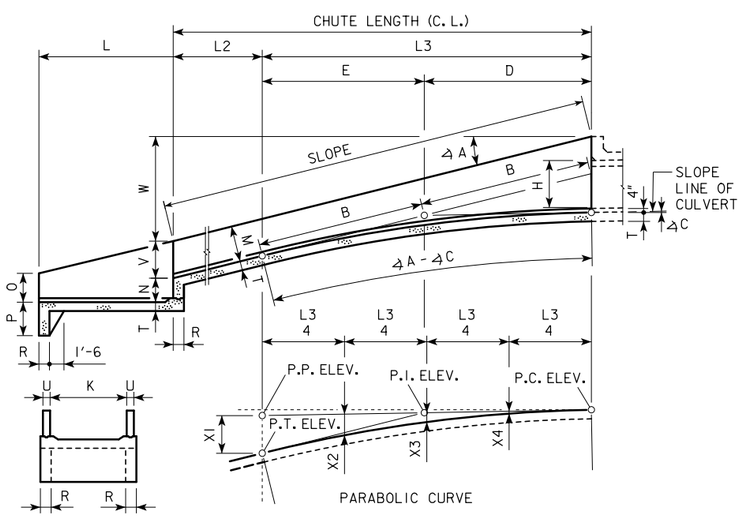

END VIEW
SEE BASIN STANDARDS FOR ADDITIONAL DETAILS NOT SHOWN.

LONGITUDINAL SECTION WITH BOX CULVERT

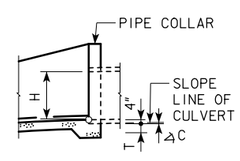

LONGITUDINAL SECTION WITH PIPE CULVERT

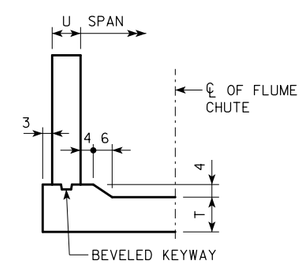

FLUME CHUTE DETAILS
(NORMAL TO FLOWLINE)

LATEST REVISION DATE

APPROVED BY BRIDGE ENGINEER

IOWA DOT Highway Division

STANDARD DESIGN

REINFORCED CONCRETE BOX CULVERTS

APRIL, 2012

REINFORCED CONCRETE FLUME DETAILS

DETAILS

RCF-02-12

ENGLISHSIGNEDFLUMES.DGN - RCF-02-12 - THIS SHEET ISSUED 04-12.

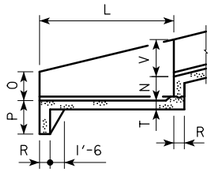

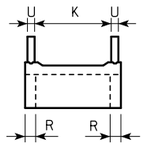

END DETAILS

ESTIMATE OF QUANTITIES - FLUME BASIN

BILL OF REINFORCING STEEL			3' x 3'				4' x 4'				5' x 3'				5' x 4'				5' x 5'				5' x 6'			
BAR	LOCATION	SHAPE	SIZE	NO.	LENGTH	WEIGHT	SIZE	NO.	LENGTH	WEIGHT	SIZE	NO.	LENGTH	WEIGHT	SIZE	NO.	LENGTH	WEIGHT	SIZE	NO.	LENGTH	WEIGHT	SIZE	NO.	LENGTH	WEIGHT
4a1	WALLS - VERT. - F.F.	—	4	28	1'-8:4'-10	61	4	30	2'-5:5'-11	84	4	28	1'-8:4'-10	61	4	30	2'-5:5'-11	84	4	32	3'-2:6'-11	108	4	34	4'-0:7'-11	135
5b1	WALLS - LONGIT.- F.F. & B.F.	—	5	8	15'-1	126	5	12	16'-2	202	5	8	15'-1	126	5	12	16'-2	202	5	16	17'-3	288	5	16	18'-4	306
5b2	WALLS - LONGIT.- F.F. & B.F.	—	5	4	13'-10	58	5	4	15'-1	63	5	4	13'-10	58	5	4	15'-1	63	5	4	16'-1	67	5	8	17'-5	145
c1	WALLS - VERT. - B.F.	—	5	14	13'-9:14'-0	203	5	15	16'-9:17'-0	264	5	14	15'-9:16'-0	232	5	15	17'-9:18'-0	280	5	12	19'-9:20'-1	249	6	9	21'-11:22'-2	298
c2	WALLS - VERT. - B.F.	—	--	--	--	--	--	--	--	--	--	--	--	--	--	--	--	--	5	4	12'-5:13'-11	55	6	8	13'-3:16'-9	180
c3	WALLS - VERT. - B.F.	—	--	--	--	--	--	--	--	--	--	--	--	--	--	--	--	--	5	8	5'-3:6'-0	47	6	16	5'-3:7'-0	147
6f1	FLOOR - LONGIT.- TOP	—	6	11	13'-5	222	6	12	14'-8	264	6	13	13'-5	262	6	13	14'-8	286	6	14	15'-8	329	6	14	16'-11	356
5f2	FLOOR - LONGIT.- BOTT.	—	5	11	13'-5	154	5	12	14'-8	184	5	13	13'-5	182	5	13	14'-8	199	5	14	15'-8	229	5	14	16'-11	247
4g1	CURTAIN BRACKET - VERT.		4	4	5'-3	14	4	4	5'-6	15	4	4	5'-3	14	4	4	5'-6	15	4	4	5'-6	15	4	4	5'-9	15
5h1	BASIN BACKWALL - VERT.		5	5	7'-4	38	5	6	8'-1	51	5	7	7'-4	54	5	7	8'-1	59	5	7	8'-7	63	5	7	9'-4	68
6m1	FLOOR TRANS. - TOP	—	6	14	4'-8:10'-11	164	6	15	5'-8:12'-5	204	6	14	6'-8:12'-11	206	6	15	6'-8:13'-5	226	6	16	6'-8:13'-11	247	6	17	6'-8:14'-5	269
5p1	CURTAIN - TRANS.	—	5	2	11'-0	23	5	2	12'-4,12'-6	26	5	2	13'-0	27	5	2	13'-4,13'-6	28	5	2	13'-10,14'-0	29	5	2	14'-3,14'-6	30
5s1	WALL - TOP SLOPE	—	5	4	15'-4	64	5	4	16'-5	68	5	4	15'-4	64	5	4	16'-5	68	5	4	17'-6	73	5	4	18'-7	78
5t1	CURTAIN - VERT.		5	9	6'-1	57	5	10	6'-4	66	5	10	6'-1	63	5	11	6'-4	73	5	11	6'-4	73	5	11	6'-7	76
TOTAL WEIGHT (LB)						1184				1491				1349				1583				1872				2350
CONCRETE (CY)	FOOTING		5.3				6.8				6.4				7.4				8.0				9.1			
	WALLS		1.8				2.6				1.9				2.6				3.6				4.7			
	TOTAL		7.1				9.4				8.3				10.0				11.6				13.8			

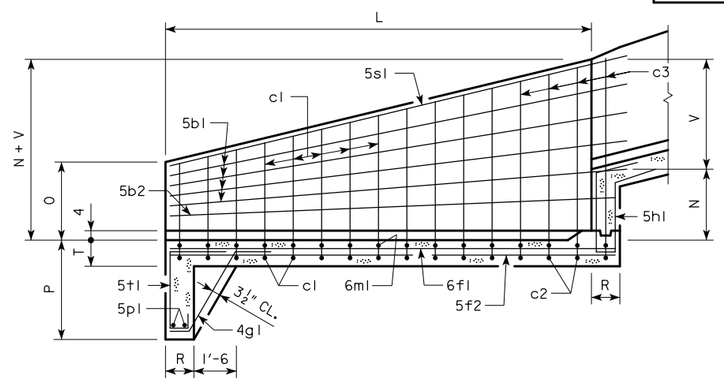

LONGITUDINAL SECTION

VARIABLE DIMENSIONS

VARIABLE (1)	$K+2U-4'' - \frac{(K-S)(\text{No. of c1} - 1)}{\text{No. of c1} + \text{c2} - 1}$
VARIABLE (2)	$S+2U-4'' + \frac{(K-S)(\text{No. of c2} - 1)}{\text{No. of c1} + \text{c2} - 1}$
VARIABLE (3)	$O+T-4'' + \frac{(N+V-O)(\text{No. of c1} - 1)}{\text{No. of c1} + \text{c2} - 1}$

TABLE OF FLUME BASIN DIMENSIONS

S x H	K	L	M	N	O	P	R	T	U	V
3' x 3'	9'-6	13'-0	2'-3	2'-0	1'-1	3'-6	0'-9	0'-11	0'-9	2'-3 7/8
4' x 4'	11'-0	14'-0	3'-0	2'-3	1'-10	3'-6	1'-0	0'-11	0'-9	3'-1 1/8
5' x 3'	11'-6	13'-0	2'-3	2'-0	1'-1	3'-6	0'-9	0'-11	0'-9	2'-3 7/8
5' x 4'	12'-0	14'-0	3'-0	2'-3	1'-10	3'-6	1'-0	0'-11	0'-9	3'-1 1/8
5' x 5'	12'-6	15'-0	3'-9	2'-6	2'-7	3'-6	1'-0	0'-11	0'-9	3'-10 3/8
5' x 6'	13'-0	16'-0	4'-6	2'-9	3'-5	3'-6	1'-3	0'-11	0'-9	4'-7 5/8

S = CULVERT SPAN
H = CULVERT HEIGHT

FLUME BASIN NOTES:

1. SEE STANDARD SHEET RCF-01-12 FOR GENERAL INFORMATION.
2. c2 & c3 BARS ARE LAPPED.

BENT BAR DETAILS

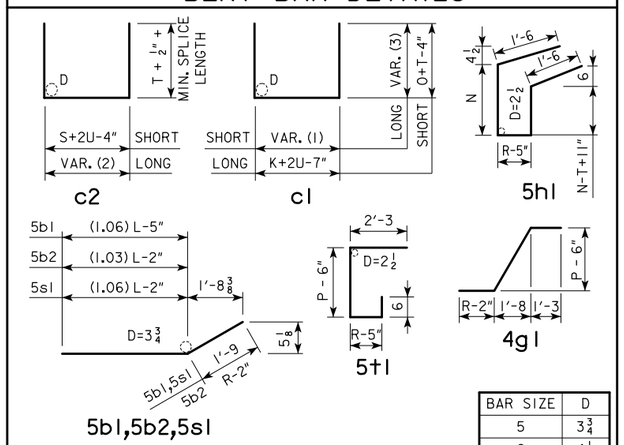

BAR SIZE	D
5	3¾
6	4½
7	5¼

NOTE: ALL DIMENSIONS ARE OUT TO OUT.
D = PIN DIAMETER

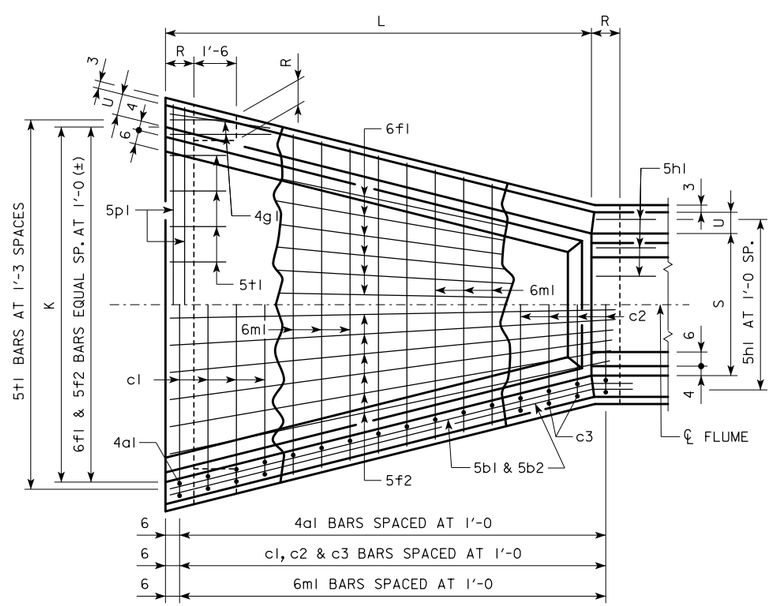

PLAN VIEW

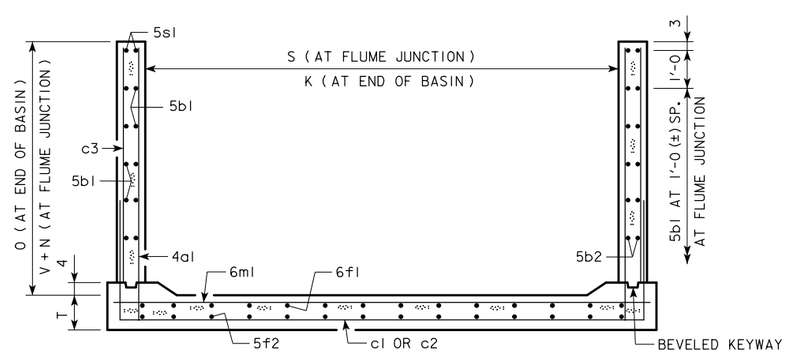

5'x5' FLUME BASIN EXAMPLE SHOWN

LATEST REVISION DATE

APPROVED BY BRIDGE ENGINEER

IOWA DOT Highway Division

STANDARD DESIGN

REINFORCED CONCRETE BOX CULVERTS

APRIL, 2012

FLUME BASIN DETAILS

3', 4' & 5' SPANS

RCFB-01-12

ENGLISHSIGNEDFLUMES.DGN - RCFB-01-12 - THIS SHEET ISSUED 04-12.

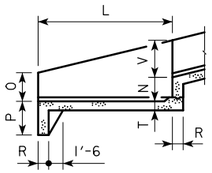

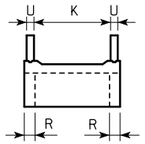

END DETAILS

ESTIMATE OF QUANTITIES - FLUME BASIN

BILL OF REINFORCING STEEL			6' x 3'				6' x 4'				6' x 5'				6' x 6'				6' x 7'				6' x 8'			
BAR	LOCATION	SHAPE	SIZE	NO.	LENGTH	WEIGHT	SIZE	NO.	LENGTH	WEIGHT	SIZE	NO.	LENGTH	WEIGHT	SIZE	NO.	LENGTH	WEIGHT	SIZE	NO.	LENGTH	WEIGHT	SIZE	NO.	LENGTH	WEIGHT
5a1	WALLS - VERT. - F.F.	—	5	28	1'-8:4'-10	95	5	30	2'-5:5'-11	130	5	32	3'-2:6'-11	168	5	34	4'-0:7'-11	211	5	36	4'-9:9'-0	258	5	38	5'-6:10'-0	307
5b1	WALLS - LONGIT.- F.F. & B.F.	—	5	8	15'-1	126	5	12	16'-2	202	5	16	17'-3	288	5	16	18'-4	306	5	20	19'-4	403	5	24	20'-5	511
5b2	WALLS - LONGIT.- F.F. & B.F.	—	5	4	13'-10	58	5	4	15'-1	63	5	4	16'-1	67	5	8	17'-5	145	5	8	18'-5	154	5	8	19'-5	162
c1	WALLS - VERT. - B.F.	⊔	5	27	16'-9:17'-0	475	5	29	18'-9:19'-0	571	5	23	20'-9:21'-1	502	5	17	22'-11:23'-2	409	5	11	24'-11:25'-2	287	5	5	27'-1:27'-4	142
c2	WALLS - VERT. - B.F.	⊔	--	--	--	--	--	--	--	--	5	8	13'-5:15'-2	119	5	16	13'-5:17'-2	255	5	24	13'-5:19'-2	408	5	32	13'-7:21'-4	583
c3	WALLS - VERT. - B.F.	—	--	--	--	--	--	--	--	--	5	16	5'-1:6'-0	92	5	32	5'-2:7'-0	203	5	48	5'-2:8'-1	332	5	64	5'-2:9'-1	476
6f1	FLOOR - LONGIT.- TOP	—	6	14	13'-5	282	6	14	14'-8	308	6	15	15'-8	353	6	15	16'-11	381	6	16	17'-11	431	6	16	18'-11	455
5f2	FLOOR - LONGIT.- BOTT.	—	5	14	13'-5	196	5	14	14'-8	214	5	15	15'-8	245	5	15	16'-11	265	5	16	17'-11	299	5	16	18'-11	316
5g1	CURTAIN BRACKET - VERT.	⌐	5	4	5'-3	22	5	4	5'-6	23	5	4	5'-6	23	5	4	5'-9	24	5	4	6'-0	25	5	4	6'-3	26
5h1	BASIN BACKWALL - VERT.	⌐	5	8	7'-4	61	5	8	8'-1	67	5	8	8'-7	72	5	8	9'-4	78	5	8	9'-10	82	5	8	10'-4	86
6m1	FLOOR TRANS. - TOP	—	6	14	7'-8:13'-11	227	6	15	7'-8:14'-5	249	6	16	7'-8:14'-11	271	6	17	7'-8:15'-5	295	6	18	7'-8:15'-11	319	6	19	7'-10:16'-7	348
6p1	CURTAIN - TRANS.	—	6	2	14'-0	42	6	2	14'-4,14'-6	43	6	2	14'-10,15'-0	45	6	2	15'-3,15'-6	46	6	2	15'-9,16'-0	48	6	2	16'-5,16'-8	50
6s1	WALL - TOP SLOPE	—	6	4	15'-4	92	6	4	16'-5	99	6	4	17'-6	105	6	4	18'-7	112	6	4	19'-7	118	6	4	20'-8	124
5t1	CURTAIN - VERT.	⌐	5	11	6'-1	70	5	11	6'-4	73	5	12	6'-4	79	5	12	6'-7	82	5	13	6'-10	93	5	13	7'-1	96
TOTAL WEIGHT (LB)						1746				2042				2429				2812				3257				3682
CONCRETE (CY)	FOOTING		7.0				8.1				8.7				9.8				10.7				12.4			
	WALLS		1.8				2.6				3.6				4.7				5.8				7.9			
	TOTAL		8.8				10.7				12.3				14.5				16.5				20.3			

VARIABLE DIMENSIONS

VARIABLE (1)	$K+2U-4'' - \frac{(K-S)\,(\text{No. of c1} - 1)}{\text{No. of c1} + \text{c2} - 1}$
VARIABLE (2)	$S+2U-4'' + \frac{(K-S)\,(\text{No. of c2} - 1)}{\text{No. of c1} + \text{c2} - 1}$
VARIABLE (3)	$O+T-4'' + \frac{(N+V-O)\,(\text{No. of c1} - 1)}{\text{No. of c1} + \text{c2} - 1}$

TABLE OF FLUME BASIN DIMENSIONS

S x H	K	L	M	N	O	P	R	T	U	V
6' x 3'	12'-6	13'-0	2'-3	2'-0	1'-1	3'-6	0'-9	0'-11	0'-9	2'-3 7/8
6' x 4'	13'-0	14'-0	3'-0	2'-3	1'-10	3'-6	1'-0	0'-11	0'-9	3'-1 1/8
6' x 5'	13'-6	15'-0	3'-9	2'-6	2'-7	3'-6	1'-0	0'-11	0'-9	3'-10 3/8
6' x 6'	14'-0	16'-0	4'-6	2'-9	3'-5	3'-6	1'-3	0'-11	0'-9	4'-7 5/8
6' x 7'	14'-6	17'-0	5'-3	3'-0	4'-2	3'-9	1'-3	0'-11	0'-9	5'-5
6' x 8'	15'-0	18'-0	6'-0	3'-3	4'-11	4'-0	1'-3	0'-11	0'-10	6'-2 1/4

S = CULVERT SPAN
H = CULVERT HEIGHT

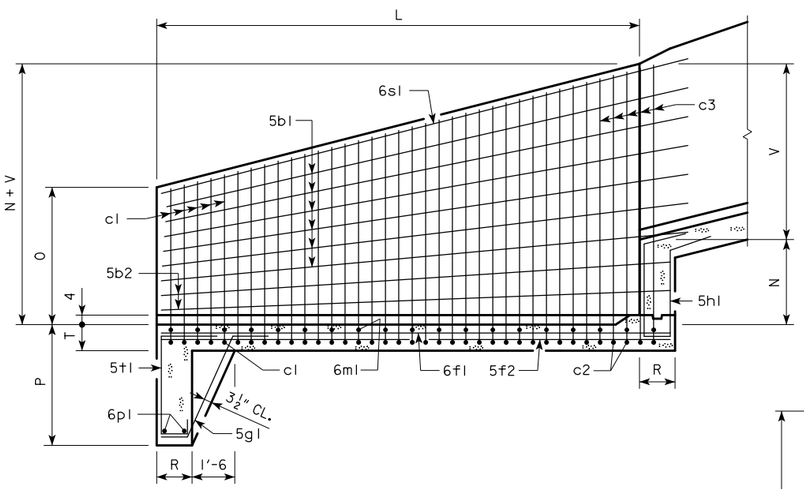

LONGITUDINAL SECTION

FLUME BASIN NOTES:

1. SEE STANDARD SHEET RCF-01-12 FOR GENERAL INFORMATION.
2. c2 & c3 BARS ARE LAPPED.
3. c1 BARS ARE OMITTED IF BOTH S AND H ARE EQUAL TO OR LARGER THAN 8' AND 9' RESPECTIVELY.

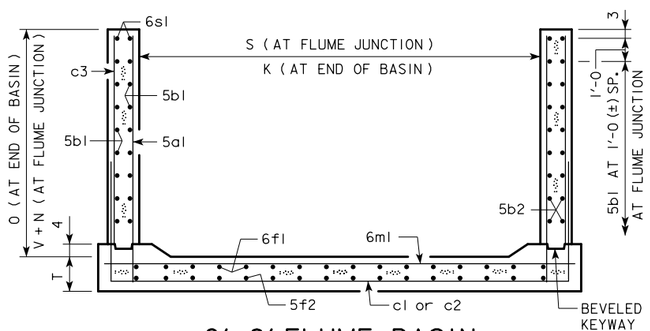

6'x8' FLUME BASIN
EXAMPLE SHOWN

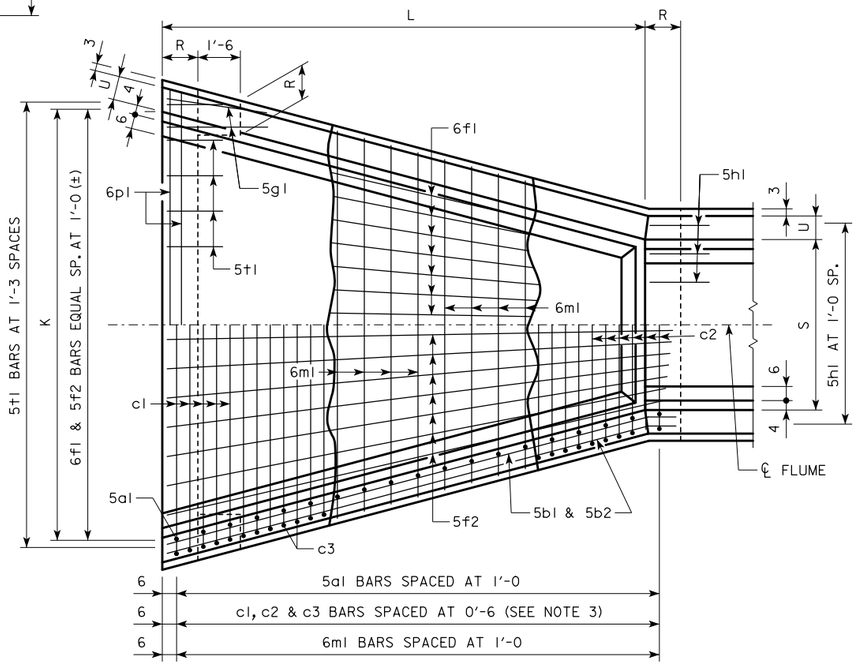

PLAN VIEW

BENT BAR DETAILS

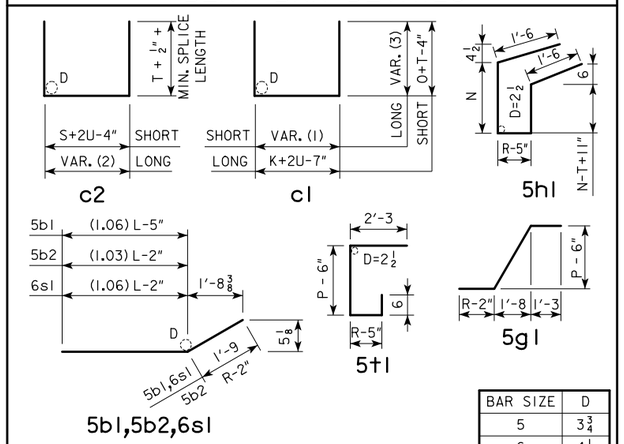

BAR SIZE	D
5	3 3/4
6	4 1/2
7	5 1/4

NOTE: ALL DIMENSIONS ARE OUT TO OUT.
D = PIN DIAMETER

LATEST REVISION DATE

APPROVED BY BRIDGE ENGINEER

IOWA DOT Highway Division

STANDARD DESIGN

REINFORCED CONCRETE BOX CULVERTS

APRIL, 2012

FLUME BASIN DETAILS

6' SPAN

RCFB-02-12

ENGLISHSIGNEDFLUMES.DGN - RCFB-02-12 - THIS SHEET ISSUED 04-12.

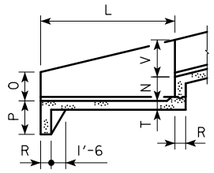

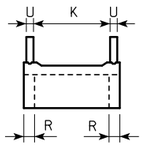

END DETAILS

ESTIMATE OF QUANTITIES - FLUME BASIN

BILL OF REINFORCING STEEL			8' x 4'				8' x 5'				8' x 6'				8' x 7'				8' x 8'				8' x 9'				8' x 10'			
BAR	LOCATION	SHAPE	SIZE	NO.	LENGTH	WEIGHT	SIZE	NO.	LENGTH	WEIGHT	SIZE	NO.	LENGTH	WEIGHT	SIZE	NO.	LENGTH	WEIGHT	SIZE	NO.	LENGTH	WEIGHT	SIZE	NO.	LENGTH	WEIGHT	SIZE	NO.	LENGTH	WEIGHT
5a1	WALLS - VERT. - F.F.	—	5	30	2'-6:6'-0	133	5	32	3'-3:7'-0	171	5	34	4'-1:8'-0	214	5	36	4'-10:9'-1	261	5	38	5'-7:10'-1	310	5	40	6'-4:11'-1	363	5	42	7'-2:12'-1	422
5b1	WALLS - LONGIT.- F.F. & B.F.	—	5	12	16'-2	202	5	16	17'-3	288	5	16	18'-4	306	5	20	19'-4	403	5	24	20'-5	511	5	28	21'-6	628	5	28	22'-6	657
5b2	WALLS - LONGIT.- F.F. & B.F.	—	5	4	15'-1	63	5	4	16'-1	67	5	8	17'-5	145	5	8	18'-5	154	5	8	19'-5	162	5	8	20'-6	171	5	12	21'-6	269
c1	WALLS - VERT. - B.F.	—	5	29	20'-11:21'-2	636	5	22	22'-11:23'-3	530	5	16	25'-1:25'-4	421	5	10	27'-1:27'-4	284	5	4	29'-3:29'-6	123	--	--	--	--	--	--	--	--
c2	WALLS - VERT. - B.F.	—	--	--	--	--	5	9	15'-7:17'-7	156	5	17	15'-7:19'-7	312	5	25	15'-7:21'-7	485	5	33	15'-9:23'-9	680	5	39	15'-9:25'-3	834	6	41	16'-7:26'-7	1329
c3	WALLS - VERT. - B.F.	—	--	--	--	--	5	18	5'-0:6'-0	103	5	34	5'-0:7'-0	213	5	50	5'-1:8'-1	343	5	66	5'-1:9'-1	488	5	78	5'-4:10'-1	627	6	82	6'-2:11'-1	1062
6f1	FLOOR - LONGIT.- TOP	—	6	16	14'-8	352	6	17	15'-8	400	6	17	16'-11	432	6	18	17'-11	484	6	18	18'-11	511	6	19	19'-11	568	6	19	20'-11	597
5f2	FLOOR - LONGIT.- BOTT.	—	5	16	14'-8	245	5	17	15'-8	278	5	17	16'-11	300	5	18	17'-11	336	5	18	18'-11	355	5	19	19'-11	395	5	19	20'-11	415
5g1	CURTAIN BRACKET - VERT.	—	5	4	5'-6	23	5	4	5'-6	23	5	4	5'-9	24	5	4	6'-0	25	5	4	6'-3	26	5	4	6'-5	27	5	4	6'-8	28
5h1	BASIN BACKWALL - VERT.	—	5	10	8'-0	83	5	10	8'-6	89	5	10	9'-3	96	5	10	9'-9	102	5	10	10'-3	107	5	10	10'-9	112	5	10	11'-3	117
6m1	FLOOR TRANS. - TOP	—	6	15	9'-8:16'-5	294	6	16	9'-8:16'-11	319	6	17	9'-8:17'-5	346	6	18	9'-8:17'-11	373	6	19	9'-10:18'-7	405	6	20	9'-10:19'-1	434	6	21	9'-10:19'-7	464
6p1	CURTAIN - TRANS.	—	6	2	16'-4,16'-6	49	6	2	16'-10,17'-0	51	6	2	17'-3,17'-6	52	6	2	17'-9,18'-0	54	6	2	18'-5,18'-8	56	6	2	18'-11,19'-2	57	6	2	19'-5,19'-8	59
6s1	WALL - TOP SLOPE	—	6	4	16'-5	99	6	4	17'-6	105	6	4	18'-7	112	6	4	19'-7	118	6	4	20'-8	124	6	4	21'-9	131	6	4	22'-9	137
5t1	CURTAIN - VERT.	—	5	13	6'-4	86	5	13	6'-4	86	5	14	6'-7	96	5	14	6'-10	100	5	15	7'-1	111	5	15	7'-4	115	5	15	7'-7	119
TOTAL WEIGHT (LB)						2265				2666				3069				3522				3969				4462				5675
CONCRETE (CY)	FOOTING		9.9				10.6				11.9				12.9				14.1				15.2				16.3			
	WALLS		2.6				3.6				4.7				5.8				7.9				9.4				11.1			
	TOTAL		12.5				14.2				16.6				18.7				22.0				24.6				27.4			

VARIABLE DIMENSIONS

VARIABLE (1)	$K+2U-4'' - \frac{(K-S)(\text{No. of c1} - 1)}{\text{No. of c1} + \text{c2} - 1}$
VARIABLE (2)	$S+2U-4'' + \frac{(K-S)(\text{No. of c2} - 1)}{\text{No. of c1} + \text{c2} - 1}$
VARIABLE (3)	$O+T-4'' + \frac{(N+V-O)(\text{No. of c1} - 1)}{\text{No. of c1} + \text{c2} - 1}$

TABLE OF FLUME BASIN DIMENSIONS

S x H	K	L	M	N	O	P	R	T	U	V
8' x 4'	15'-0	14'-0	3'-0	2'-3	1'-10	3'-6	1'-0	1'-0	0'-9	3'-1 1/8
8' x 5'	15'-6	15'-0	3'-9	2'-6	2'-7	3'-6	1'-0	1'-0	0'-9	3'-10 3/8
8' x 6'	16'-0	16'-0	4'-6	2'-9	3'-5	3'-6	1'-3	1'-0	0'-9	4'-7 5/8
8' x 7'	16'-6	17'-0	5'-3	3'-0	4'-2	3'-9	1'-3	1'-0	0'-9	5'-5
8' x 8'	17'-0	18'-0	6'-0	3'-3	4'-11	4'-0	1'-3	1'-0	0'-10	6'-2 1/4
8' x 9'	17'-6	19'-0	6'-9	3'-6	5'-8	4'-3	1'-3	1'-0	0'-10	6'-11 1/2
8' x 10'	18'-0	20'-0	7'-6	3'-9	6'-6	4'-6	1'-3	1'-0	0'-10	7'-8 3/4

S = CULVERT SPAN
H = CULVERT HEIGHT

FLUME BASIN NOTES:

1. SEE STANDARD SHEET RCF-01-12 FOR GENERAL INFORMATION.
2. c2 & c3 BARS ARE LAPPED.
3. c1 BARS ARE OMITTED IF BOTH S AND H ARE EQUAL TO OR LARGER THAN 8' AND 9' RESPECTIVELY.

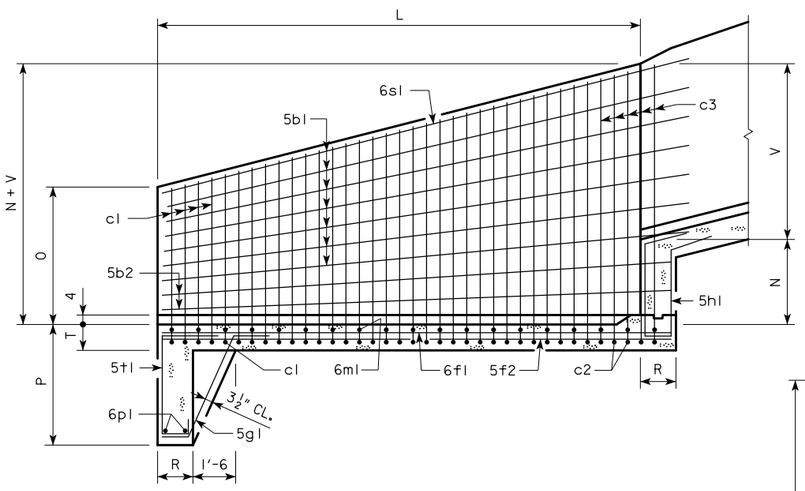

LONGITUDINAL SECTION

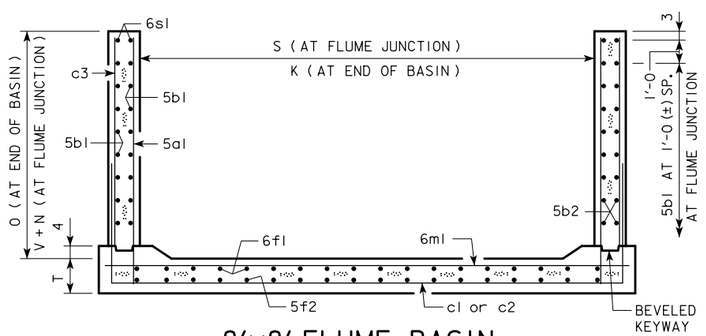

8'x8' FLUME BASIN
EXAMPLE SHOWN

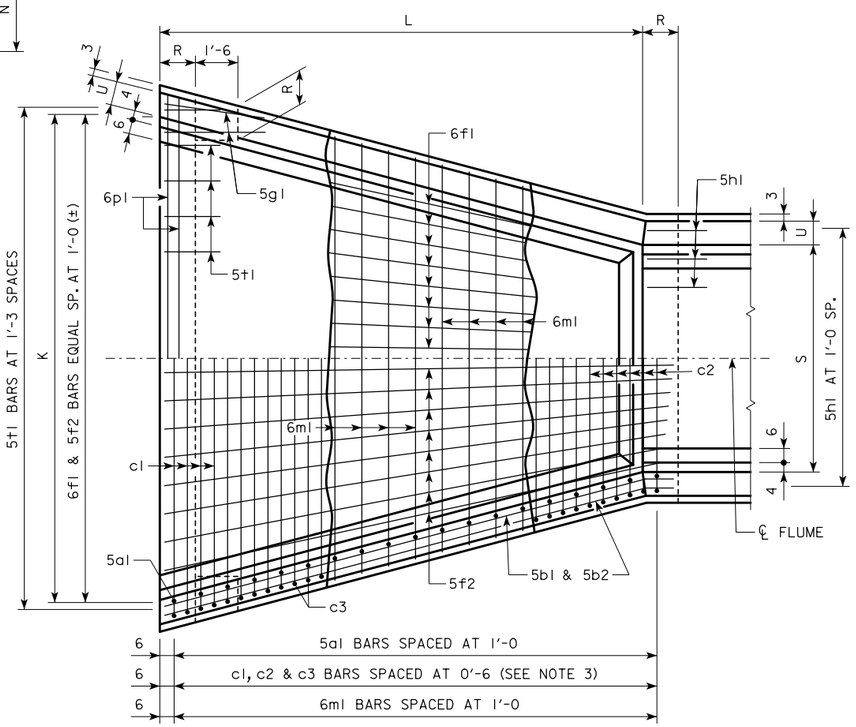

PLAN VIEW

BENT BAR DETAILS

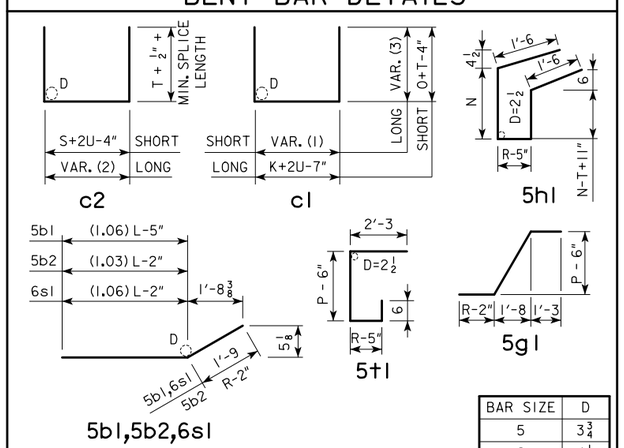

NOTE: ALL DIMENSIONS ARE OUT TO OUT.
D = PIN DIAMETER

BAR SIZE	D
5	3 3/4
6	4 1/2
7	5 1/4

LATEST REVISION DATE

APPROVED BY BRIDGE ENGINEER

IOWA DOT Highway Division

STANDARD DESIGN

REINFORCED CONCRETE BOX CULVERTS

APRIL, 2012

FLUME BASIN DETAILS

8' SPAN

RCFB-03-12

ENGLISHSIGNEDFLUMES.DGN - RCFB-03-12 - THIS SHEET ISSUED 04-12.

ESTIMATE OF QUANTITIES - FLUME BASIN

BILL OF REINFORCING STEEL			10' x 4'				10' x 5'				10' x 6'				10' x 7'			
BAR	LOCATION	SHAPE	SIZE	NO.	LENGTH	WEIGHT	SIZE	NO.	LENGTH	WEIGHT	SIZE	NO.	LENGTH	WEIGHT	SIZE	NO.	LENGTH	WEIGHT
5a1	WALLS - VERT. - F.F.	—	5	30	2'-7:6'-1	136	5	32	3'-4:7'-1	174	5	34	4'-2:8'-1	217	5	36	4'-11:9'-2	264
5b1	WALLS - LONGIT.- F.F. & B.F.	—	5	12	16'-2	202	5	16	17'-3	288	5	16	18'-4	306	5	20	19'-4	403
5b2	WALLS - LONGIT.- F.F. & B.F.	—	5	4	15'-1	63	5	4	16'-1	67	5	8	17'-5	145	5	8	18'-5	154
c1	WALLS - VERT. - B.F.	—	5	28	23'-1:23'-4	678	5	22	25'-1:25'-5	579	5	15	27'-3:27'-6	428	5	9	29'-3:29'-6	276
c2	WALLS - VERT. - B.F.	—	5	1	17'-9	19	5	9	17'-9:19'-9	176	5	18	17'-9:22'-0	373	5	26	17'-9:24'-0	566
c3	WALLS - VERT. - B.F.	—	5	2	5'-0	10	5	18	5'-0:6'-0	103	5	36	4'-11:7'-0	224	5	52	4'-11:8'-1	353
6f1	FLOOR - LONGIT.- TOP	—	6	18	14'-8	397	6	19	15'-8	447	6	19	16'-11	483	6	20	17'-11	538
5f2	FLOOR - LONGIT.- BOTT.	—	5	18	14'-8	275	5	19	15'-8	310	5	19	16'-11	335	5	20	17'-11	374
5g1	CURTAIN BRACKET - VERT.		5	4	5'-6	23	5	4	5'-6	23	5	4	5'-9	24	5	4	6'-0	25
5h1	BASIN BACKWALL - VERT.		5	12	7'-11	99	5	12	8'-5	105	5	12	9'-2	115	5	12	9'-8	121
6m1	FLOOR TRANS. - TOP	—	6	15	11'-8:18'-5	339	6	16	11'-8:18'-11	367	6	17	11'-8:19'-5	397	6	18	11'-8:19'-11	427
6p1	CURTAIN - TRANS.	—	6	2	18'-4,18'-6	55	6	2	18'-10,19'-0	57	6	2	19'-3,19'-6	58	6	2	19'-9,20'-0	60
6s1	WALL - TOP SLOPE	—	6	4	16'-5	99	6	4	17'-6	105	6	4	18'-7	112	6	4	19'-7	118
5t1	CURTAIN - VERT.		5	15	6'-4	99	5	15	6'-4	99	5	15	6'-7	103	5	16	6'-10	114
TOTAL WEIGHT (LB)						2494				2900				3320				3793
CONCRETE (CY)	FOOTING		11.9				12.7				14.2				15.4			
	WALLS		2.6				3.6				4.7				5.7			
	TOTAL		14.5				16.3				18.9				21.1			

BILL OF REINFORCING STEEL			10' x 8'				10' x 9'				10' x 10'				10' x 11'				10' x 12'			
BAR	LOCATION	SHAPE	SIZE	NO.	LENGTH	WEIGHT	SIZE	NO.	LENGTH	WEIGHT	SIZE	NO.	LENGTH	WEIGHT	SIZE	NO.	LENGTH	WEIGHT	SIZE	NO.	LENGTH	WEIGHT
5a1	WALLS - VERT. - F.F.	—	5	38	5'-8:10'-2	314	5	40	6'-5:11'-2	367	5	42	7'-3:12'-2	425	5	44	8'-0:13'-3	488	5	46	8'-9:14'-3	552
5b1	WALLS - LONGIT.- F.F. & B.F.	—	5	24	20'-5	511	5	28	21'-6	628	5	32	22'-6	751	5	32	23'-7	787	5	36	24'-8	926
5b2	WALLS - LONGIT.- F.F. & B.F.	—	5	8	19'-5	162	5	8	20'-6	171	5	8	21'-6	179	5	12	22'-7	283	5	12	23'-7	295
c1	WALLS - VERT. - B.F.		5	3	31'-5:31'-8	99	--	--	--	--	--	--	--	--	--	--	--	--	--	--	--	--
c2	WALLS - VERT. - B.F.		5	34	17'-11:26'-2	782	5	39	17'-11:27'-5	922	6	41	18'-9:28'-9	1463	7	43	20'-7:31'-1	2271	7	45	20'-9:31'-9	2414
c3	WALLS - VERT. - B.F.	—	5	68	4'-11:9'-1	496	5	78	5'-4:10'-1	627	6	82	6'-2:11'-1	1062	7	86	6'-11:12'-2	1677	7	90	7'-8:13'-2	1916
6f1	FLOOR - LONGIT.- TOP	—	6	20	18'-11	568	6	21	19'-11	628	6	21	20'-11	660	6	22	21'-11	724	6	22	22'-11	757
5f2	FLOOR - LONGIT.- BOTT.	—	5	20	18'-11	395	5	21	19'-11	436	5	21	20'-11	458	5	22	21'-11	503	5	22	22'-11	526
5g1	CURTAIN BRACKET - VERT.		5	4	6'-3	26	5	4	6'-5	27	5	4	6'-8	28	5	4	6'-11	29	5	4	7'-2	30
5h1	BASIN BACKWALL - VERT.		5	12	10'-2	127	5	12	10'-8	134	5	12	11'-2	140	5	12	11'-8	146	5	13	12'-2	165
6m1	FLOOR TRANS. - TOP	—	6	19	11'-10:20'-7	463	6	20	11'-10:21'-1	494	6	21	11'-10:21'-7	527	6	22	12'-0:22'-3	566	6	23	12'-2:22'-11	606
6p1	CURTAIN - TRANS.	—	6	2	20'-5,20'-8	62	6	2	20'-11,21'-2	63	6	2	21'-5,21'-8	65	6	2	22'-1,22'-4	67	6	2	22'-9,23'-0	69
6s1	WALL - TOP SLOPE	—	6	4	20'-8	124	6	4	21'-9	131	6	4	22'-9	137	6	4	23'-10	143	6	4	24'-11	150
5t1	CURTAIN - VERT.		5	16	7'-1	118	5	17	7'-4	130	5	17	7'-7	134	5	18	7'-10	147	5	18	8'-1	152
TOTAL WEIGHT (LB)						4247				4758				6029				7831				8558
CONCRETE (CY)	FOOTING		16.8				18.0				19.3				20.8				22.4			
	WALLS		7.9				9.4				11.0				14.1				17.6			
	TOTAL		24.7				27.4				30.3				34.9				40.0			

VARIABLE DIMENSIONS

VARIABLE (1)	$K+2U-4'' - \frac{(K-S)\,(\text{No. of c1} - 1)}{\text{No. of c1} + \text{c2} - 1}$
VARIABLE (2)	$S+2U-4'' + \frac{(K-S)\,(\text{No. of c2} - 1)}{\text{No. of c1} + \text{c2} - 1}$
VARIABLE (3)	$O+T-4'' + \frac{(N+V-O)\,(\text{No. of c1} - 1)}{\text{No. of c1} + \text{c2} - 1}$

TABLE OF FLUME BASIN DIMENSIONS

S x H	K	L	M	N	O	P	R	T	U	V
10' x 4'	17'-0	14'-0	3'-0	2'-3	1'-10	3'-6	1'-0	1'-1	0'-9	3'-1 1/8
10' x 5'	17'-6	15'-0	3'-9	2'-6	2'-7	3'-6	1'-0	1'-1	0'-9	3'-10 3/8
10' x 6'	18'-0	16'-0	4'-6	2'-9	3'-5	3'-6	1'-3	1'-1	0'-9	4'-7 5/8
10' x 7'	18'-6	17'-0	5'-3	3'-0	4'-2	3'-9	1'-3	1'-1	0'-9	5'-5
10' x 8'	19'-0	18'-0	6'-0	3'-3	4'-11	4'-0	1'-3	1'-1	0'-10	6'-2 1/4
10' x 9'	19'-6	19'-0	6'-9	3'-6	5'-8	4'-3	1'-3	1'-1	0'-10	6'-11 1/2
10' x 10'	20'-0	20'-0	7'-6	3'-9	6'-6	4'-6	1'-3	1'-1	0'-10	7'-8 3/4
10' x 11'	20'-6	21'-0	8'-3	4'-0	7'-3	4'-9	1'-3	1'-1	0'-11	8'-6
10' x 12'	21'-0	22'-0	9'-0	4'-3	8'-0	5'-0	1'-3	1'-1	1'-0	9'-3 3/8

S = CULVERT SPAN
H = CULVERT HEIGHT

BENT BAR DETAILS

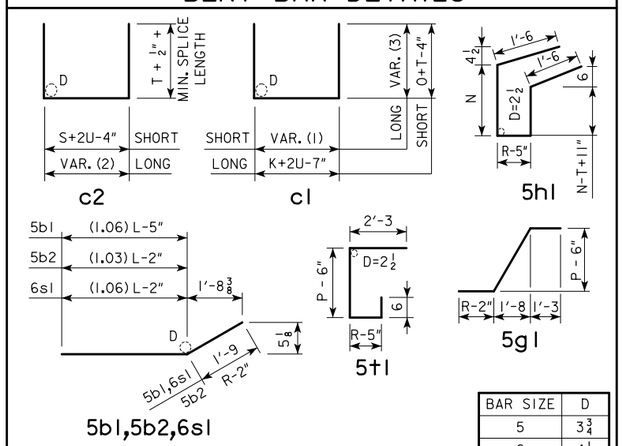

BAR SIZE	D
5	3 3/4
6	4 1/2
7	5 1/4

NOTE: ALL DIMENSIONS ARE OUT TO OUT.
D = PIN DIAMETER

NOTE:
SEE STANDARD SHEET RCF-05-12 FOR FLUME BASIN DETAILS AND NOTES.

LATEST REVISION DATE

APPROVED BY BRIDGE ENGINEER

IOWA DOT Highway Division

STANDARD DESIGN

REINFORCED CONCRETE BOX CULVERTS

APRIL, 2012

FLUME BASIN DETAILS

10' SPAN

RCFB-04-12

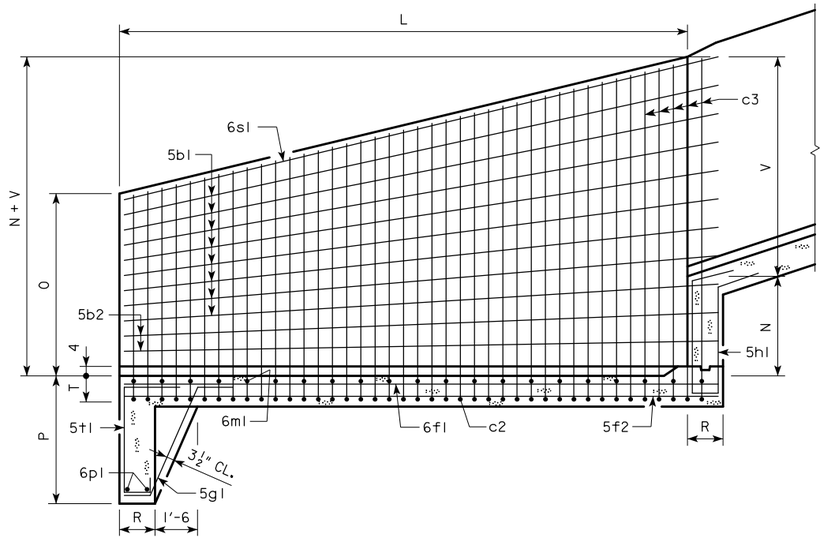

LONGITUDINAL SECTION

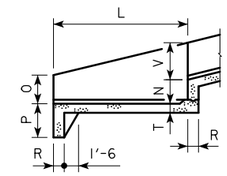

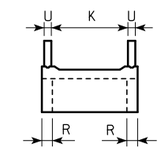

END DETAILS

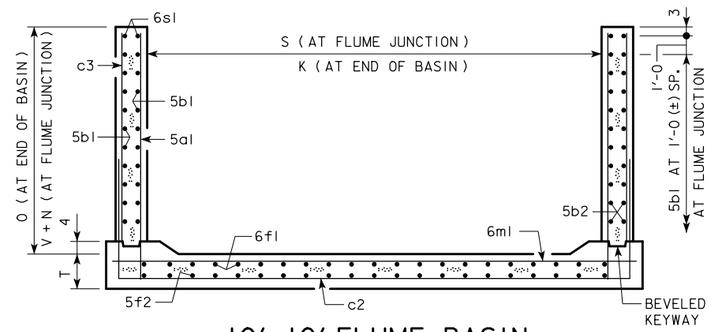

10'x10' FLUME BASIN
EXAMPLE SHOWN

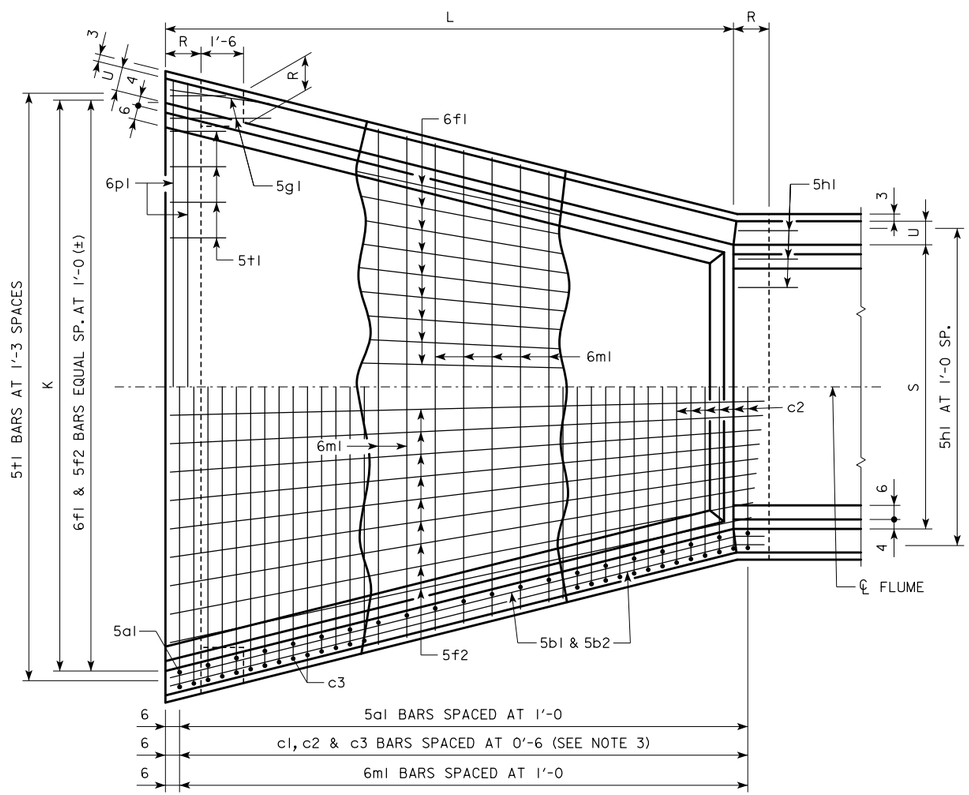

PLAN VIEW

FLUME BASIN NOTES:

1. SEE STANDARD SHEET RCF-01-12 FOR GENERAL INFORMATION.
2. c2 & c3 BARS ARE LAPPED.
3. c1 BARS ARE OMITTED IF BOTH S AND H ARE EQUAL TO OR LARGER THAN 8' AND 9' RESPECTIVELY.
4. SEE STANDARD SHEET RCF-04-12 FOR FLUME BASIN QUANTITIES.

LATEST REVISION DATE

APPROVED BY BRIDGE ENGINEER

IOWA DOT Highway Division

STANDARD DESIGN

REINFORCED CONCRETE BOX CULVERTS

APRIL, 2012

FLUME BASIN DETAILS

10' SPAN

RCFB-05-12

ENGLISHSIGNEDFLUMES.DGN - RCFB-05-12 - THIS SHEET ISSUED 04-12.

ESTIMATE OF QUANTITIES - FLUME BASIN

BILL OF REINFORCING STEEL			12′ x 4′				12′ x 5′				12′ x 6′				12′ x 7′			
BAR	LOCATION	SHAPE	SIZE	NO.	LENGTH	WEIGHT	SIZE	NO.	LENGTH	WEIGHT	SIZE	NO.	LENGTH	WEIGHT	SIZE	NO.	LENGTH	WEIGHT
5a1	WALLS - VERT. - F.F.	—	5	30	2′-8:6′-2	138	5	32	3′-5:7′-2	177	5	34	4′-3:8′-2	220	5	36	5′-0:9′-3	268
5b1	WALLS - LONGIT.- F.F. & B.F.	—	5	12	16′-2	202	5	16	17′-3	288	5	20	18′-4	382	5	20	19′-4	403
5b2	WALLS - LONGIT.- F.F. & B.F.	—	5	4	15′-1	63	5	4	16′-1	67	5	4	17′-5	73	5	8	18′-5	154
c1	WALLS - VERT. - B.F.		5	27	25′-3:25′-6	715	5	21	27′-3:27′-7	601	5	15	29′-5:29′-8	462	5	9	31′-5:31′-8	296
c2	WALLS - VERT. - B.F.		5	2	19′-11:20′-2	42	5	10	19′-11:22′-2	219	5	18	19′-11:24′-2	414	5	26	19′-11:26′-2	625
c3	WALLS - VERT. - B.F.	—	5	4	4′-10:5′-0	21	5	20	4′-10:6′-0	113	5	36	4′-11:7′-0	224	5	52	4′-11:8′-1	353
6f1	FLOOR - LONGIT.- TOP	—	6	20	14′-8	441	6	21	15′-8	494	6	21	16′-11	534	6	22	17′-11	592
5f2	FLOOR - LONGIT.- BOTT.	—	5	20	14′-8	306	5	21	15′-8	343	5	21	16′-11	371	5	22	17′-11	411
5g1	CURTAIN BRACKET - VERT.		5	4	5′-6	23	5	4	5′-6	23	5	4	5′-9	24	5	4	6′-0	25
5h1	BASIN BACKWALL - VERT.		5	14	7′-10	114	5	14	8′-4	122	5	14	9′-1	133	5	14	9′-7	140
6m1	FLOOR TRANS. - TOP	—	6	15	13′-8:20′-5	384	6	16	13′-8:20′-11	416	6	17	13′-8:21′-5	448	6	18	13′-8:21′-11	481
6p1	CURTAIN - TRANS.	—	6	2	20′-4,20′-6	61	6	2	20′-10,21′-0	63	6	2	21′-3,21′-6	64	6	2	21′-9,22′-0	66
6s1	WALL - TOP SLOPE	—	6	4	16′-5	99	6	4	17′-6	105	6	4	18′-7	112	6	4	19′-7	118
5t1	CURTAIN - VERT.		5	16	6′-4	106	5	17	6′-4	112	5	17	6′-7	117	5	17	6′-10	121
TOTAL WEIGHT (LB)						2715				3143				3578				4053
CONCRETE (CY)	FOOTING		14.7				15.7				16.7				18.1			
	WALLS		2.6				3.6				4.7				5.7			
	TOTAL		17.3				19.3				21.4				23.8			

BILL OF REINFORCING STEEL			12′ x 8′				12′ x 9′				12′ x 10′				12′ x 11′				12′ x 12′			
BAR	LOCATION	SHAPE	SIZE	NO.	LENGTH	WEIGHT	SIZE	NO.	LENGTH	WEIGHT	SIZE	NO.	LENGTH	WEIGHT	SIZE	NO.	LENGTH	WEIGHT	SIZE	NO.	LENGTH	WEIGHT
5a1	WALLS - VERT. - F.F.	—	5	38	5′-9:10′-3	317	5	40	6′-6:11′-3	370	5	42	7′-4:12′-3	429	5	44	8′-1:13′-4	491	5	46	8′-10:14′-4	556
5b1	WALLS - LONGIT.- F.F. & B.F.	—	5	28	21′-6	628	5	32	22′-6	751	5	32	23′-7	787	5	36	24′-8	926
5b2	WALLS - LONGIT.- F.F. & B.F.	—	5	8	19′-5	162	5	8	20′-6	171	5	8	21′-6	179	5	12	22′-7	283	5	12	23′-7	295
c1	WALLS - VERT. - B.F.		5	3	33′-7:33′-10	105	--	--	--	--	--	--	--	--	--	--	--	--	--	--	--	--
c2	WALLS - VERT. - B.F.		5	34	20′-1:28′-4	858	5	39	20′-1:29′-7	1010	6	41	20′-11:30′-11	1596	7	43	22′-9:33′-3	2461	7	45	22′-11:33′-11	2614
c3	WALLS - VERT. - B.F.	—	5	68	4′-11:9′-1	496	5	78	5′-4:10′-1	627	6	82	6′-2:11′-1	1062	7	86	6′-11:12′-2	1677	7	90	7′-8:13′-2	1916
6f1	FLOOR - LONGIT.- TOP	—	6	22	18′-11	625	6	23	19′-11	688	6	23	20′-11	723	6	24	21′-11	790	6	24	22′-11	826
5f2	FLOOR - LONGIT.- BOTT.	—	5	22	18′-11	434	5	23	19′-11	478	5	23	20′-11	502	5	24	21′-11	549	5	24	22′-11	574
5g1	CURTAIN BRACKET - VERT.		5	4	6′-3	26	5	4	6′-5	27	5	4	6′-8	28	5	4	6′-11	29	5	4	7′-2	30
5h1	BASIN BACKWALL - VERT.		5	14	10′-1	147	5	14	10′-7	155	5	14	11′-1	162	5	14	11′-7	169	5	15	12′-1	189
6m1	FLOOR TRANS. - TOP	—	6	19	13′-10:22′-7	520	6	20	13′-10:23′-1	554	6	21	13′-10:23′-7	590	6	22	14′-0:24′-3	632	6	23	14′-2:24′-11	675
6p1	CURTAIN - TRANS.	—	6	2	22′-5,22′-8	68	6	2	22′-11,23′-2	69	6	2	23′-5,23′-8	71	6	2	24′-1,24′-4	73	6	2	24′-9,25′-0	75
6s1	WALL - TOP SLOPE	—	6	4	20′-8	124	6	4	21′-9	131	6	4	22′-9	137	6	4	23′-10	143	6	4	24′-11	150
5t1	CURTAIN - VERT.		5	18	7′-1	133	5	18	7′-4	138	5	19	7′-7	150	5	19	7′-10	155	5	20	8′-1	169
TOTAL WEIGHT (LB)						4526				5046				6380				8239				8995
CONCRETE (CY)	FOOTING		19.6				21.1				22.3				24.2				26.0			
	WALLS		7.9				9.4				11.0				14.1				17.6			
	TOTAL		27.5				30.5				33.3				38.3				43.6			

VARIABLE DIMENSIONS

VARIABLE (1)	$K+2U-4'' - \frac{(K-S)\,(\text{No. of c1} - 1)}{\text{No. of c1} + \text{c2} - 1}$
VARIABLE (2)	$S+2U-4'' + \frac{(K-S)\,(\text{No. of c2} - 1)}{\text{No. of c1} + \text{c2} - 1}$
VARIABLE (3)	$O+T-4'' + \frac{(N+V-O)\,(\text{No. of c1} - 1)}{\text{No. of c1} + \text{c2} - 1}$

TABLE OF FLUME BASIN DIMENSIONS

S x H	K	L	M	N	O	P	R	T	U	V
12′ x 4′	19′-0	14′-0	3′-0	2′-3	1′-10	3′-6	1′-0	1′-2	0′-9	3′-1 1/8
12′ x 5′	19′-6	15′-0	3′-9	2′-6	2′-7	3′-6	1′-0	1′-2	0′-9	3′-10 3/8
12′ x 6′	20′-0	16′-0	4′-6	2′-9	3′-5	3′-6	1′-3	1′-2	0′-9	4′-7 5/8
12′ x 7′	20′-6	17′-0	5′-3	3′-0	4′-2	3′-9	1′-3	1′-2	0′-9	5′-5
12′ x 8′	21′-0	18′-0	6′-0	3′-3	4′-11	4′-0	1′-3	1′-2	0′-10	6′-2 1/4
12′ x 9′	21′-6	19′-0	6′-9	3′-6	5′-8	4′-3	1′-3	1′-2	0′-10	6′-11 1/2
12′ x 10′	22′-0	20′-0	7′-6	3′-9	6′-6	4′-6	1′-3	1′-2	0′-10	7′-8 3/4
12′ x 11′	22′-6	21′-0	8′-3	4′-0	7′-3	4′-9	1′-3	1′-2	0′-11	8′-6
12′ x 12′	23′-0	22′-0	9′-0	4′-3	8′-0	5′-0	1′-3	1′-2	1′-0	9′-3 3/8

S = CULVERT SPAN
H = CULVERT HEIGHT

BENT BAR DETAILS

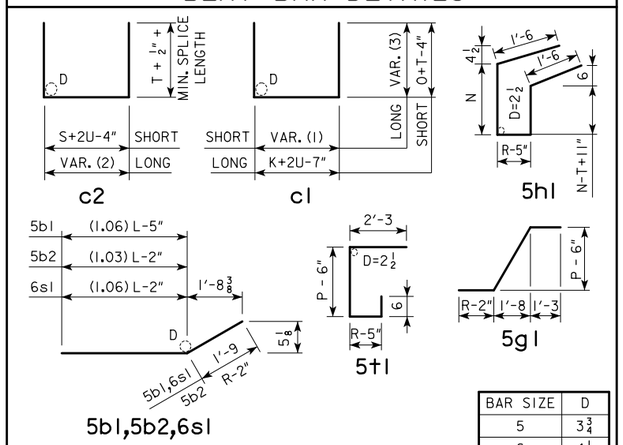

BAR SIZE	D
5	3 3/4
6	4 1/2
7	5 1/4

NOTE: ALL DIMENSIONS ARE OUT TO OUT.
D = PIN DIAMETER

NOTE:
SEE STANDARD SHEET RCF-07-12 FOR FLUME BASIN DETAILS AND NOTES.

LATEST REVISION DATE

APPROVED BY BRIDGE ENGINEER

IOWA DOT Highway Division

STANDARD DESIGN

REINFORCED CONCRETE BOX CULVERTS

APRIL, 2012

FLUME BASIN DETAILS

12′ SPAN

RCFB-06-12

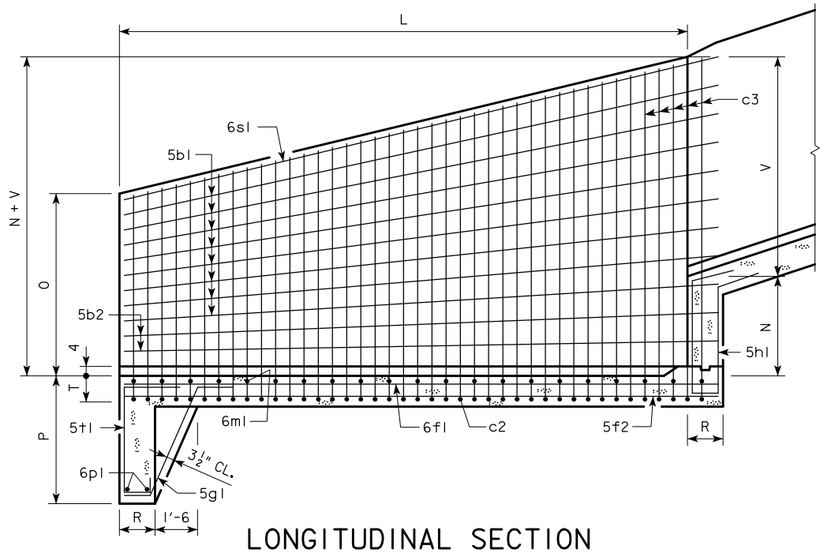

LONGITUDINAL SECTION

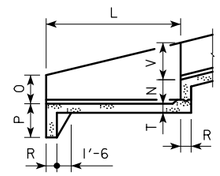

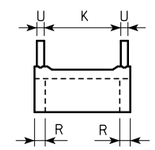

END DETAILS

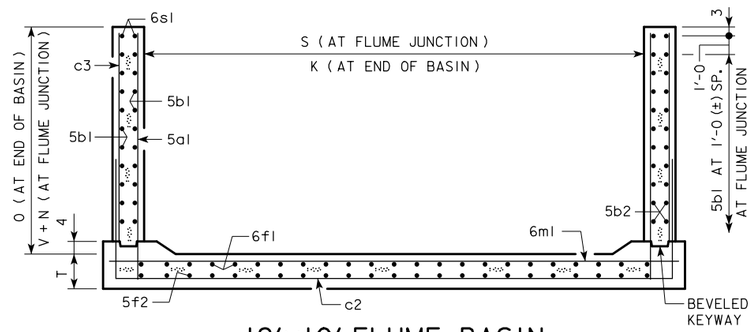

12'x10' FLUME BASIN
EXAMPLE SHOWN

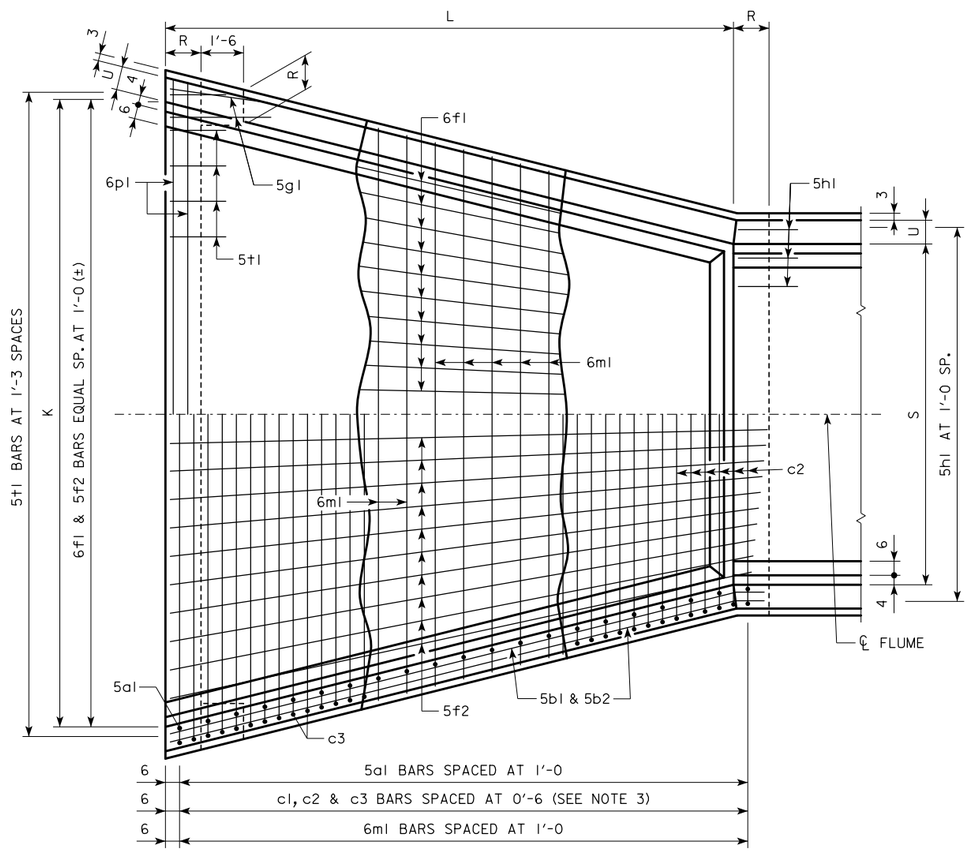

PLAN VIEW

FLUME BASIN NOTES:

1. SEE STANDARD SHEET RCF-01-12 FOR GENERAL INFORMATION.
2. c2 & c3 BARS ARE LAPPED.
3. c1 BARS ARE OMITTED IF BOTH S AND H ARE EQUAL TO OR LARGER THAN 8' AND 9' RESPECTIVELY.
4. SEE STANDARD SHEET RCF-06-12 FOR FLUME BASIN QUANTITES.

LATEST REVISION DATE

APPROVED BY BRIDGE ENGINEER

IOWA DOT Highway Division

STANDARD DESIGN

REINFORCED CONCRETE BOX CULVERTS

APRIL, 2012

FLUME BASIN DETAILS

12' SPAN

RCFB-07-12

ENGLISHSIGNEDFLUMES.DGN - RCFB-07-12 - THIS SHEET ISSUED 04-12.

ESTIMATE OF QUANTITIES - FLUME BELL JOINTS

JUNCTION BELL JOINT			3′ x 3′			4′ x 4′			5′ x 3′			5′ x 4′			5′ x 5′			5′ x 6′		
BAR	LOCATION	SHAPE	NO.	LENGTH	WEIGHT	NO.	LENGTH	WEIGHT	NO.	LENGTH	WEIGHT	NO.	LENGTH	WEIGHT	NO.	LENGTH	WEIGHT	NO.	LENGTH	WEIGHT
5x1	WALLS & FLOOR		3	16′-4	51	3	14′-3	45	3	18′-4	57	3	15′-3	48	3	15′-3	48	3	15′-3	48
5x3	WALLS VERT.		--	---	--	6	4′-4	27	--	---	--	6	4′-4	27	6	5′-4	33	6	6′-4	40
5y1	WALLS HORIZ.		10	4′-10	50	12	4′-10	60	10	4′-10	50	12	4′-10	60	14	4′-10	71	16	4′-10	81
5y2	FLOOR VERT.		5	6′-2	32	6	6′-2	39	7	6′-2	45	7	6′-2	45	7	6′-2	45	7	6′-2	45
5z1	FLOOR VERT.		5	2′-11	15	6	2′-11	18	7	2′-11	21	7	2′-11	21	7	2′-11	21	7	2′-11	21
TOTAL WEIGHT (LBS.)					148			189			173			201			218			235
CONCRETE (CY)	FOOTING		0.7			0.8			0.8			0.8			0.8			0.8		
	WALLS		0.4			0.6			0.4			0.6			0.7			0.8		
	TOTAL		1.1			1.4			1.2			1.4			1.5			1.6		
CHUTE BELL JOINT			3′ x 3′			4′ x 4′			5′ x 3′			5′ x 4′			5′ x 5′			5′ x 6′		
BAR	LOCATION	SHAPE	NO.	LENGTH	WEIGHT	NO.	LENGTH	WEIGHT	NO.	LENGTH	WEIGHT	NO.	LENGTH	WEIGHT	NO.	LENGTH	WEIGHT	NO.	LENGTH	WEIGHT
5x2	WALLS & FLOOR		3	13′-2	41	3	15′-8	49	3	15′-2	47	3	16′-8	52	3	18′-2	57	3	19′-8	62
5y3	WALLS HORIZ.		8	4′-10	40	8	4′-10	40	8	4′-10	40	8	4′-10	40	10	4′-10	50	12	4′-10	60
5y4	FLOOR VERT.		5	6′-1	32	6	6′-1	38	7	6′-1	44	7	6′-1	44	7	6′-1	44	7	6′-1	44
5z1	FLOOR VERT.		5	2′-11	15	6	2′-11	18	7	2′-11	21	7	2′-11	21	7	2′-11	21	7	2′-11	21
TOTAL WEIGHT (LBS.)					128			145			152			157			172			187
CONCRETE (CY)	FOOTING		0.7			0.7			0.8			0.8			0.8			0.8		
	WALLS		0.2			0.3			0.2			0.3			0.4			0.5		
	TOTAL		0.9			1.0			1.0			1.1			1.2			1.3		

BARREL & CHUTE DIMENSIONS

S = CULVERT SPAN
H = CULVERT HEIGHT

S x H	M	T	U	BT	BU
3′ x 3′	2′-3	11	9	10	9
4′ x 4′	3′-0	11	9	10	9
5′ x 3′	2′-3	11	9	10	9
5′ x 4′	3′-0	11	9	10	9
5′ x 5′	3′-9	11	9	10	9
5′ x 6′	4′-6	11	9	10	9

BENT BAR DETAILS

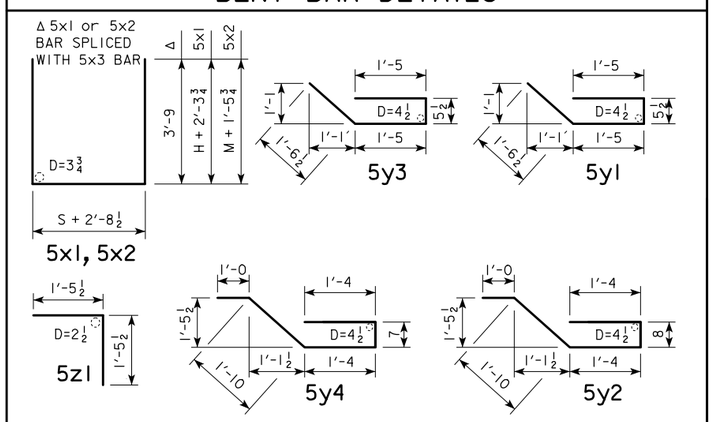

NOTE: ALL DIMENSIONS ARE OUT TO OUT.
D = PIN DIAMETER

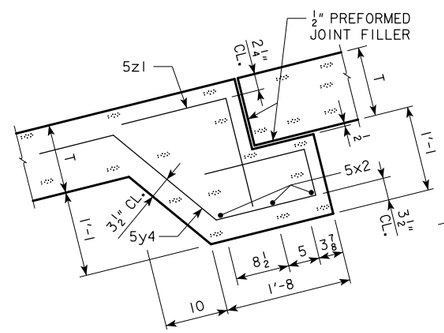

CHUTE FOOTING

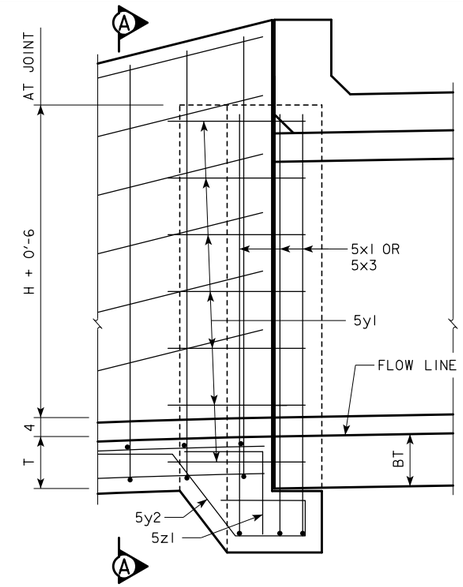

PART ELEV. - JUNCTION BELL JT.

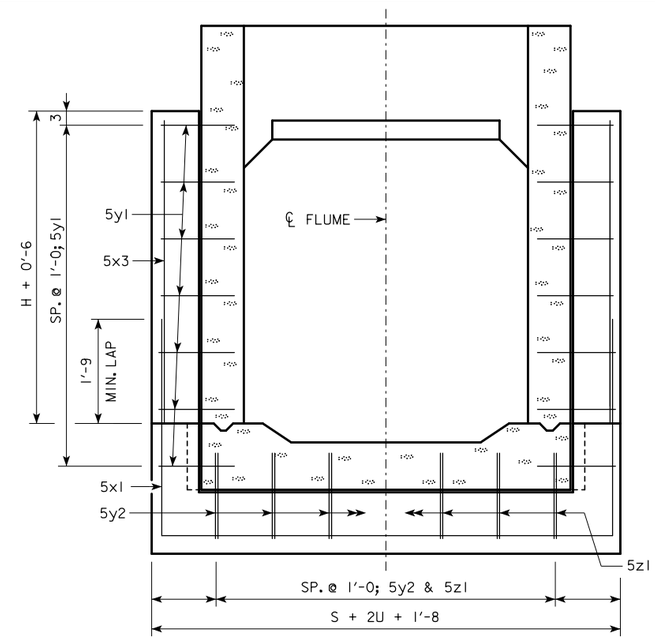

SECTION A-A

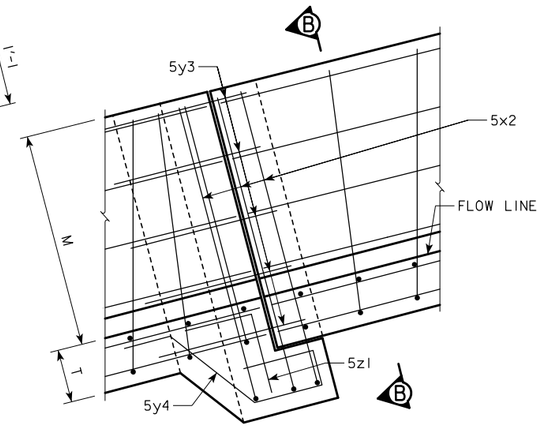

PART ELEVATION - CHUTE BELL JT.

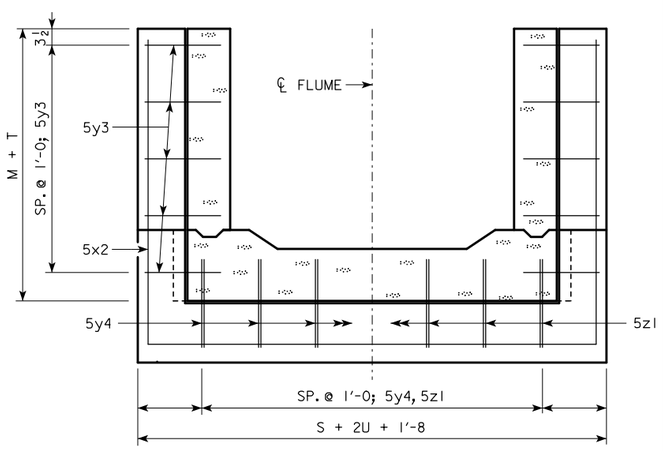

SECTION B-B

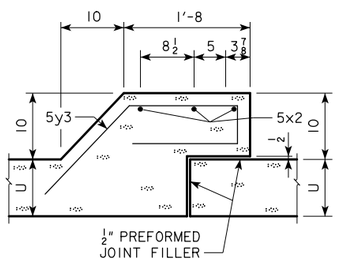

CHUTE WALLS

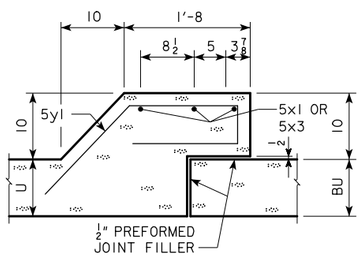

JUNCTION WALLS

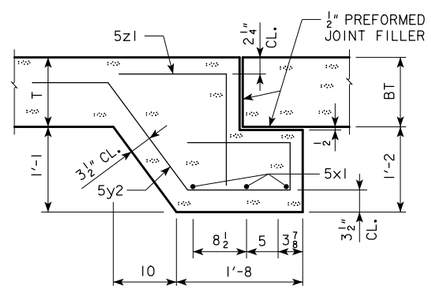

JUNCTION FOOTING

NOTES:

1. DIMENSIONS AND QUANTITIES SHOWN BASED ON 'U' FLUME WALLS, 'BU' BARREL WALLS, 'T' FLUME FLOOR AND 'BT' BARREL FLOOR THICKNESSES.
2. CHANGE LENGTHS OF BARS 5x1 AND ADJUST REINFORCING STEEL AND CONCRETE QUANTITIES ACCORDINGLY FOR WALL AND FLOOR THICKNESSES OTHER THAN SHOWN.
3. FLOOR BARS m1 ARE TO BE SHORTENED 6" AT BELL JOINTS.
4. SEE STANDARD SHEET RCF-01-12 FOR GENERAL INFORMATION.

LATEST REVISION DATE

APPROVED BY BRIDGE ENGINEER

IOWA DOT Highway Division

STANDARD DESIGN

REINFORCED CONCRETE BOX CULVERTS

APRIL, 2012

FLUME BELL JOINT DETAILS

3′, 4′ & 5′ SPANS

FBJ-01-12

ENGLISHSIGNEDFLUMES.DGN - FBJ-01-12 - THIS SHEET ISSUED 04-12.

ESTIMATE OF QUANTITIES - FLUME BELL JOINTS

JUNCTION BELL JOINT			6′ x 3′			6′ x 4′			6′ x 5′			6′ x 6′			6′ x 7′			6′ x 8′		
BAR	LOCATION	SHAPE	NO.	LENGTH	WEIGHT	NO.	LENGTH	WEIGHT	NO.	LENGTH	WEIGHT	NO.	LENGTH	WEIGHT	NO.	LENGTH	WEIGHT	NO.	LENGTH	WEIGHT
6x1	WALLS & FLOOR		4	20′-0	120	4	17′-7	106	4	17′-7	106	4	17′-7	106	4	17′-7	106	4	17′-9	107
6x3	WALLS VERT.		--	---	--	8	4′-4	52	8	5′-4	64	8	6′-4	76	8	7′-4	88	8	8′-4	100
6y1	WALLS HORIZ.		10	6′-2	93	12	6′-2	111	14	6′-2	130	16	6′-2	148	18	6′-2	167	20	6′-3	188
6y2	FLOOR VERT.		8	7′-3	87	8	7′-3	87	8	7′-3	87	8	7′-3	87	8	7′-3	87	8	7′-3	87
6z1	FLOOR VERT.		8	3′-3	39	8	3′-3	39	8	3′-3	39	8	3′-3	39	8	3′-3	39	8	3′-3	39
TOTAL WEIGHT (LBS.)					339			395			426			456			487			521
CONCRETE (CY)	FOOTING		1.3			1.3			1.3			1.3			1.3			1.3		
	WALLS		0.6			0.8			1.0			1.2			1.4			1.6		
	TOTAL		1.9			2.1			2.3			2.5			2.7			2.9		
CHUTE BELL JOINT			6′ x 3′			6′ x 4′			6′ x 5′			6′ x 6′			6′ x 7′			6′ x 8′		
BAR	LOCATION	SHAPE	NO.	LENGTH	WEIGHT	NO.	LENGTH	WEIGHT	NO.	LENGTH	WEIGHT	NO.	LENGTH	WEIGHT	NO.	LENGTH	WEIGHT	NO.	LENGTH	WEIGHT
6x2	WALLS & FLOOR		4	16′-10	101	4	18′-4	110	4	19′-10	119	4	17′-7	106	4	17′-7	106	4	17′-9	107
6x4	WALLS VERT.		--	---	--	--	---	--	--	---	--	8	4′-0	48	8	4′-9	57	8	5′-6	66
6y3	WALLS HORIZ.		6	6′-2	56	8	6′-2	74	10	6′-2	93	12	6′-2	111	12	6′-2	111	14	6′-3	131
6y4	FLOOR VERT.		8	7′-2	86	8	7′-2	86	8	7′-2	86	8	7′-2	86	8	7′-2	86	8	7′-2	86
6z1	FLOOR VERT.		8	3′-3	39	8	3′-3	39	8	3′-3	39	8	3′-3	39	8	3′-3	39	8	3′-3	39
TOTAL WEIGHT (LBS.)					282			309			337			390			399			429
CONCRETE (CY)	FOOTING		1.3			1.3			1.3			1.3			1.3			1.3		
	WALLS		0.3			0.5			0.6			0.8			0.9			1.0		
	TOTAL		1.6			1.8			1.9			2.1			2.2			2.3		

BARREL & CHUTE DIMENSIONS

S = CULVERT SPAN
H = CULVERT HEIGHT

S x H	M	T	U	BT	BU
6′ x 3′	2′-3	0′-11	0′-9	0′-10	0′-9
6′ x 4′	3′-0	0′-11	0′-9	0′-10	0′-9
6′ x 5′	3′-9	0′-11	0′-9	0′-10	0′-9
6′ x 6′	4′-6	0′-11	0′-9	0′-10	0′-9
6′ x 7′	5′-3	0′-11	0′-9	0′-10	0′-9
6′ x 8′	6′-0	0′-11	0′-10	0′-10	0′-9

BENT BAR DETAILS

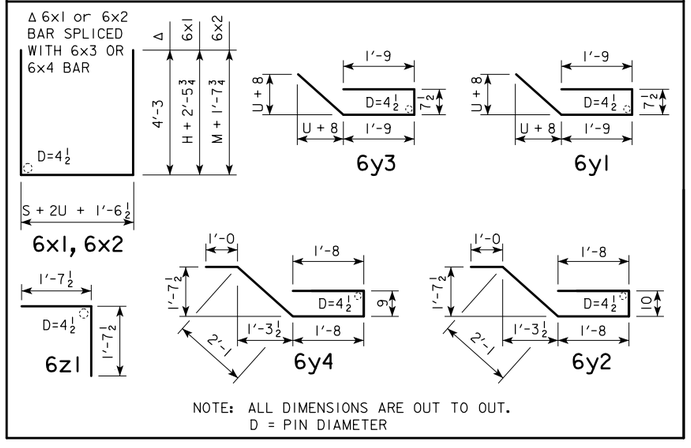

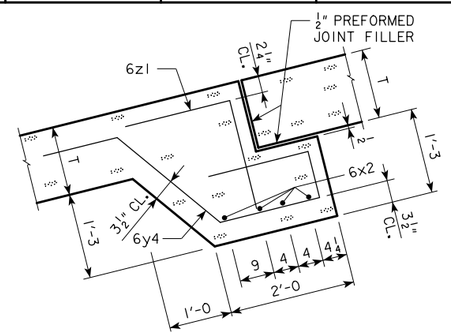

CHUTE FOOTING

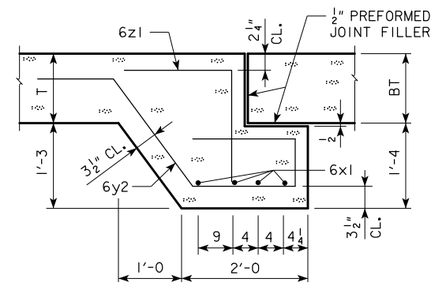

JUNCTION FOOTING

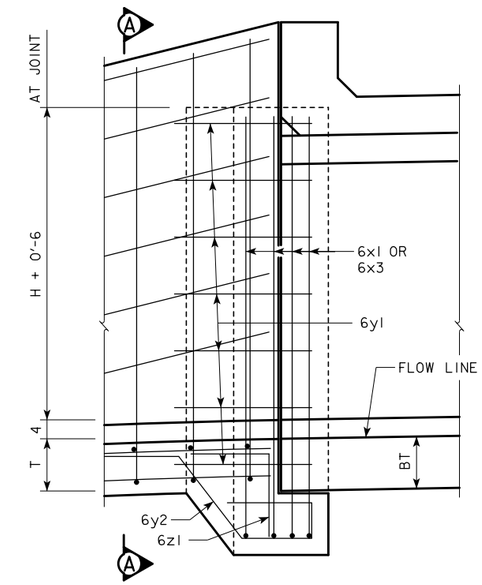

PART ELEV. - JUNCTION BELL JT.

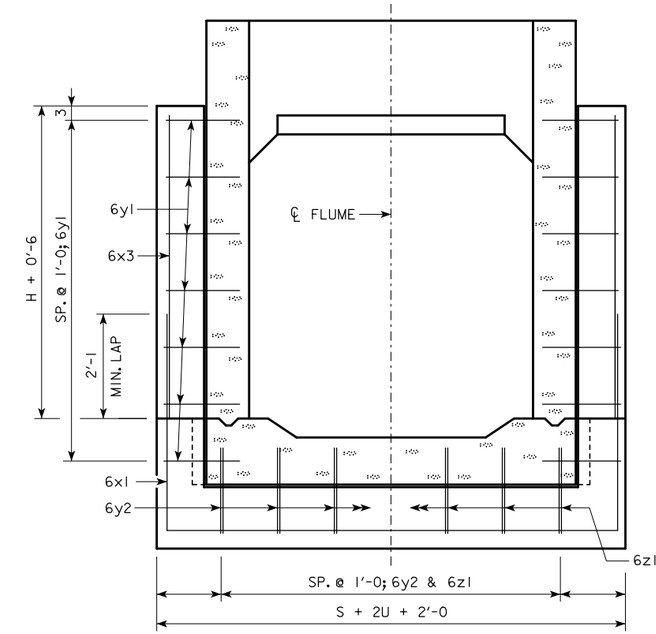

SECTION A-A

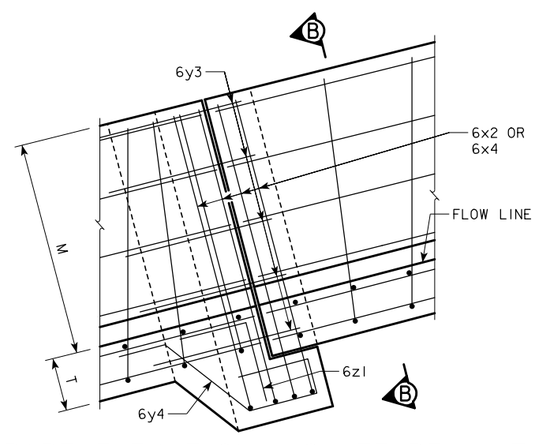

PART ELEVATION - CHUTE BELL JT.

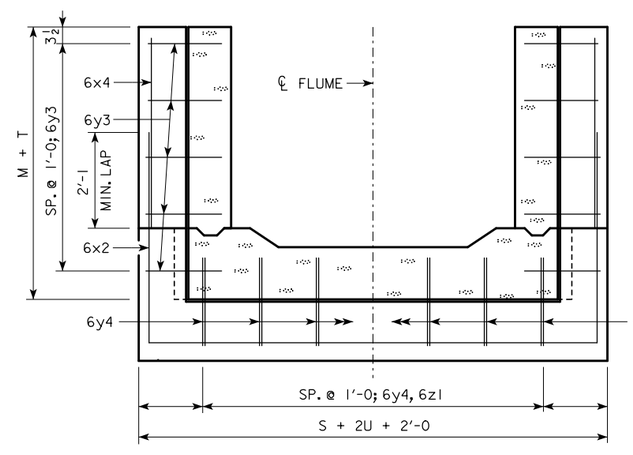

SECTION B-B

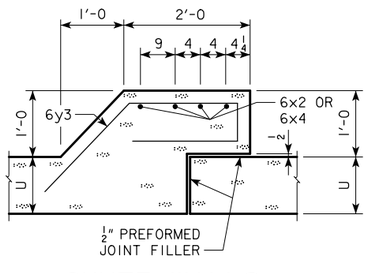

CHUTE WALLS

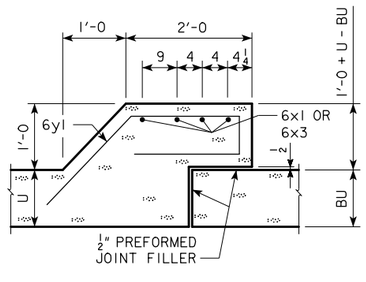

JUNCTION WALLS

NOTES:

1. DIMENSIONS AND QUANTITIES SHOWN BASED ON 'U' FLUME WALLS, 'BU' BARREL WALLS, 'T' FLUME FLOOR AND 'BT' BARREL FLOOR THICKNESSES.
2. CHANGE LENGTHS OF BARS 6x1 AND ADJUST REINFORCING STEEL AND CONCRETE QUANTITIES ACCORDINGLY FOR WALL AND FLOOR THICKNESSES OTHER THAN SHOWN.
3. FLOOR BARS m1 ARE TO BE SHORTENED 6" AT BELL JOINTS.
4. SEE STANDARD SHEET RCF-01-12 FOR GENERAL INFORMATION.

LATEST REVISION DATE

APPROVED BY BRIDGE ENGINEER

IOWA DOT Highway Division

STANDARD DESIGN

REINFORCED CONCRETE BOX CULVERTS

APRIL, 2012

FLUME BELL JOINT DETAILS

6′ SPAN

FBJ-02-12

ESTIMATE OF QUANTITIES - FLUME BELL JOINTS

JUNCTION BELL JOINT			8′ x 4′			8′ x 5′			8′ x 6′			8′ x 7′			8′ x 8′			8′ x 9′			8′ x 10′		
BAR	LOCATION	SHAPE	NO.	LENGTH	WEIGHT	NO.	LENGTH	WEIGHT	NO.	LENGTH	WEIGHT	NO.	LENGTH	WEIGHT	NO.	LENGTH	WEIGHT	NO.	LENGTH	WEIGHT	NO.	LENGTH	WEIGHT
6x1	WALLS & FLOOR		4	19′-7	118	4	19′-7	118	4	19′-7	118	4	19′-7	118	4	19′-9	119	4	19′-9	119	4	19′-9	119
6x3	WALLS VERT.		8	4′-4	52	8	5′-4	64	8	6′-4	76	8	7′-4	88	8	8′-4	100	8	9′-4	112	8	10′-4	124
6y1	WALLS HORIZ.		12	6′-2	111	14	6′-2	130	16	6′-2	148	18	6′-2	167	20	6′-3	188	22	6′-3	207	24	6′-3	225
6y2	FLOOR VERT.		10	7′-5	111	10	7′-5	111	10	7′-5	111	10	7′-5	111	10	7′-5	111	10	7′-5	111	10	7′-5	111
6z1	FLOOR VERT.		10	3′-5	51	10	3′-5	51	10	3′-5	51	10	3′-5	51	10	3′-5	51	10	3′-5	51	10	3′-5	51
TOTAL WEIGHT (LBS.)					443			474			504			535			569			600			630
CONCRETE (CY)	FOOTING		1.6			1.6			1.6			1.6			1.6			1.6			1.6		
	WALLS		0.8			1.0			1.2			1.4			1.6			1.8			1.9		
	TOTAL		2.4			2.6			2.8			3.0			3.2			3.4			3.5		
CHUTE BELL JOINT			8′ x 4′			8′ x 5′			8′ x 6′			8′ x 7′			8′ x 8′			8′ x 9′			8′ x 10′		
BAR	LOCATION	SHAPE	NO.	LENGTH	WEIGHT	NO.	LENGTH	WEIGHT	NO.	LENGTH	WEIGHT	NO.	LENGTH	WEIGHT	NO.	LENGTH	WEIGHT	NO.	LENGTH	WEIGHT	NO.	LENGTH	WEIGHT
6x2	WALLS & FLOOR		4	20′-6	123	4	22′-0	132	4	19′-9	119	4	19′-9	119	4	19′-11	120	4	19′-11	120	4	19′-11	120
6x4	WALLS VERT.		--	---	--	--	---	--	8	4′-0	48	8	4′-9	57	8	5′-6	66	8	6′-3	75	8	7′-0	84
6y3	WALLS HORIZ.		8	6′-2	74	10	6′-2	93	12	6′-2	111	12	6′-2	111	14	6′-3	131	16	6′-3	150	18	6′-3	169
6y4	FLOOR VERT.		10	7′-4	110	10	7′-4	110	10	7′-4	110	10	7′-4	110	10	7′-4	110	10	7′-4	110	10	7′-4	110
6z1	FLOOR VERT.		10	3′-5	51	10	3′-5	51	10	3′-5	51	10	3′-5	51	10	3′-5	51	10	3′-5	51	10	3′-5	51
TOTAL WEIGHT (LBS.)					358			386			439			448			478			506			534
CONCRETE (CY)	FOOTING		1.5			1.5			1.5			1.5			1.6			1.6			1.6		
	WALLS		0.5			0.6			0.8			0.9			1.0			1.2			1.3		
	TOTAL		2.0			2.1			2.3			2.4			2.6			2.8			2.9		

BARREL & CHUTE DIMENSIONS

S = CULVERT SPAN
H = CULVERT HEIGHT

S x H	M	T	U	BT	BU
8′ x 4′	3′-0	1′-0	0′-9	0′-11	0′-9
8′ x 5′	3′-9	1′-0	0′-9	0′-11	0′-9
8′ x 6′	4′-6	1′-0	0′-9	0′-11	0′-9
8′ x 7′	5′-3	1′-0	0′-9	0′-11	0′-9
8′ x 8′	6′-0	1′-0	0′-10	0′-11	0′-9
8′ x 9′	6′-9	1′-0	0′-10	0′-11	0′-9
8′ x 10′	7′-6	1′-0	0′-10	0′-11	0′-10

BENT BAR DETAILS

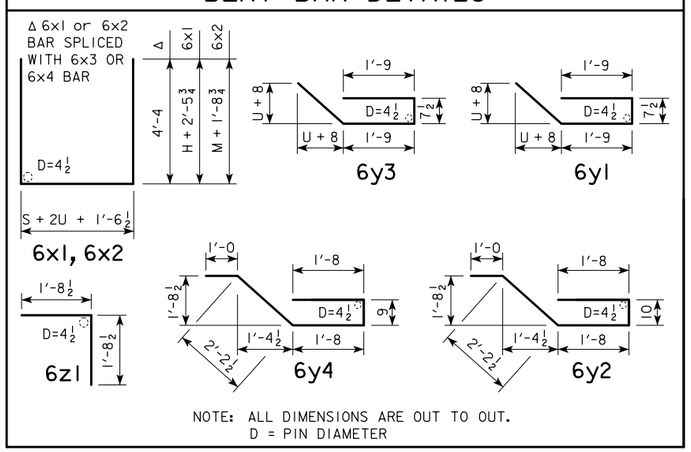

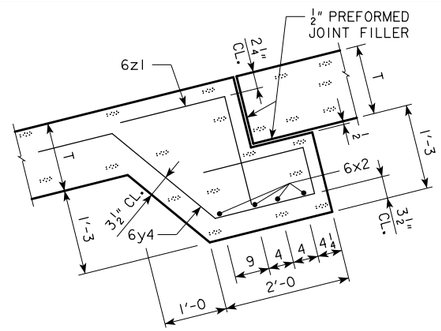

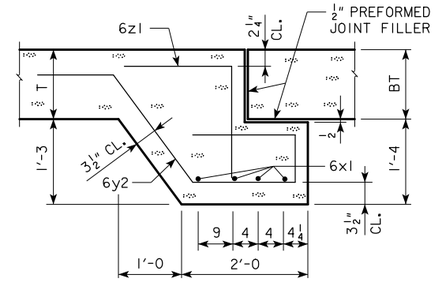

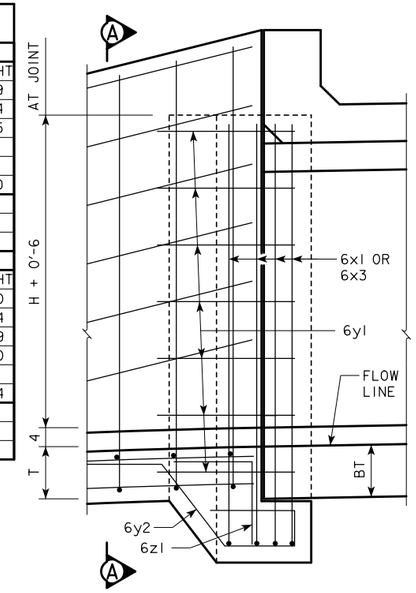

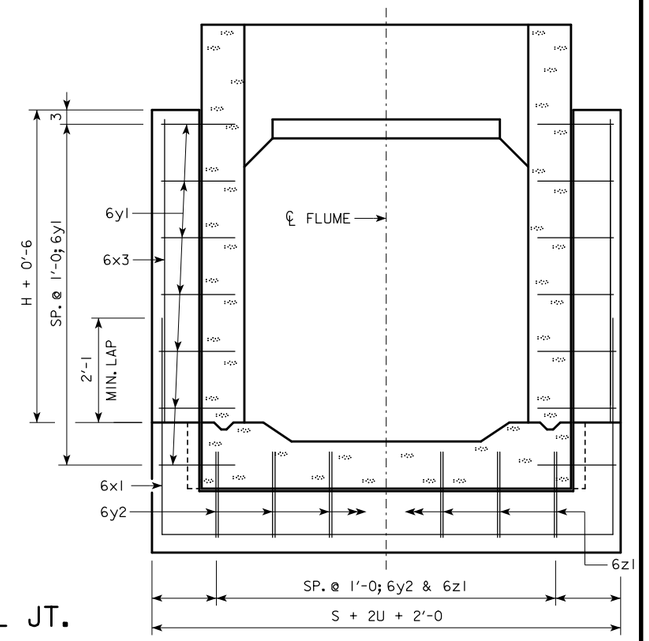

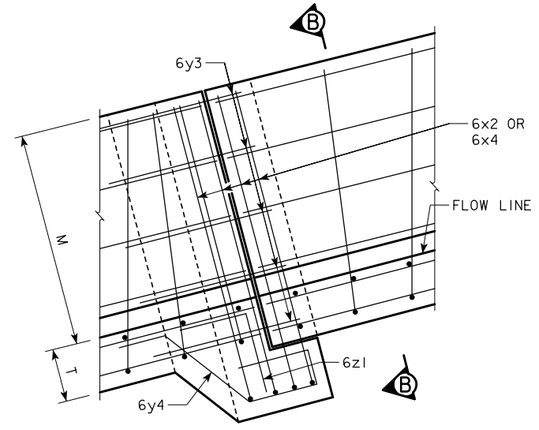

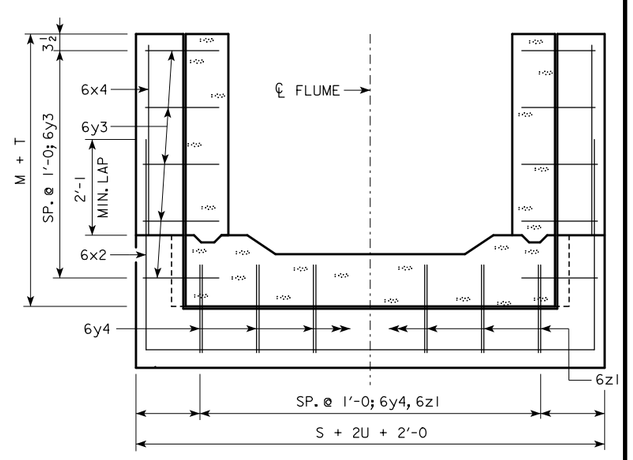

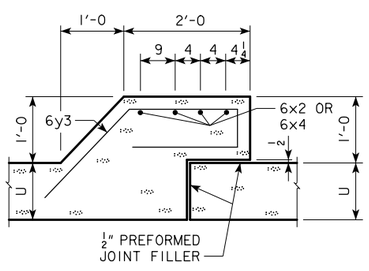

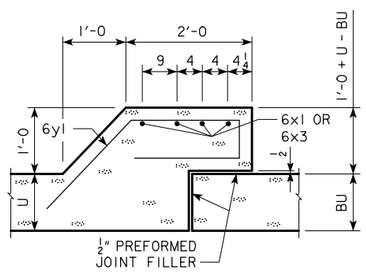

NOTES:

1. DIMENSIONS AND QUANTITIES SHOWN BASED ON 'U' FLUME WALLS, 'BU' BARREL WALLS, 'T' FLUME FLOOR AND 'BT' BARREL FLOOR THICKNESSES.
2. CHANGE LENGTHS OF BARS 6x1 AND ADJUST REINFORCING STEEL AND CONCRETE QUANTITIES ACCORDINGLY FOR WALL AND FLOOR THICKNESSES OTHER THAN SHOWN.
3. FLOOR BARS m1 ARE TO BE SHORTENED 6" AT BELL JOINTS.
4. SEE STANDARD SHEET RCF-01-12 FOR GENERAL INFORMATION.

LATEST REVISION DATE

APPROVED BY BRIDGE ENGINEER

IOWA DOT Highway Division

STANDARD DESIGN

REINFORCED CONCRETE BOX CULVERTS

APRIL, 2012

FLUME BELL JOINT DETAILS

8′ SPAN

FBJ-03-12

ESTIMATE OF QUANTITIES - FLUME BELL JOINTS

JUNCTION BELL JOINT			10' x 4'			10' x 5'			10' x 6'			10' x 7'			10' x 8'			10' x 9'			10' x 10'			10' x 11'			10' x 12'		
BAR	LOCATION	SHAPE	NO.	LENGTH	WEIGHT	NO.	LENGTH	WEIGHT	NO.	LENGTH	WEIGHT	NO.	LENGTH	WEIGHT	NO.	LENGTH	WEIGHT	NO.	LENGTH	WEIGHT	NO.	LENGTH	WEIGHT	NO.	LENGTH	WEIGHT	NO.	LENGTH	WEIGHT
6x1	WALLS & FLOOR	⊔	4	22'-11	138	4	22'-11	138	4	22'-11	138	4	22'-11	138	4	23'-1	139	4	23'-1	139	4	23'-1	139	4	23'-3	140	4	23'-5	141
6x3	WALLS VERT.	—	8	4'-4	52	8	5'-4	64	8	6'-4	76	8	7'-4	88	8	8'-4	100	8	9'-4	112	8	10'-4	124	8	11'-4	136	8	12'-4	148
6y1	WALLS HORIZ.	⊐	12	7'-8	138	14	7'-8	161	16	7'-8	184	18	7'-8	207	20	7'-10	235	22	7'-10	259	24	7'-10	282	26	7'-11	309	28	8'-1	340
6y2	FLOOR VERT.	⊐	12	9'-1	164	12	9'-1	164	12	9'-1	164	12	9'-1	164	12	9'-1	164	12	9'-1	164	12	9'-1	164	12	9'-1	164	13	9'-1	177
6z1	FLOOR VERT.	⊓	12	4'-1	74	12	4'-1	74	12	4'-1	74	12	4'-1	74	12	4'-1	74	12	4'-1	74	12	4'-1	74	12	4'-1	74	13	4'-1	80
TOTAL WEIGHT (LBS.)					566			601			636			671			712			748			783			823			886
CONCRETE (CY)	FOOTING		2.8			2.8			2.8			2.8			2.9			2.9			2.9			2.9			2.9		
	WALLS		1.3			1.6			1.9			2.1			2.4			2.7			3.0			3.3			3.6		
	TOTAL		4.1			4.4			4.7			4.9			5.3			5.6			5.9			6.2			6.5		

CHUTE BELL JOINT			10' x 4'			10' x 5'			10' x 6'			10' x 7'			10' x 8'			10' x 9'			10' x 10'			10' x 11'			10' x 12'		
BAR	LOCATION	SHAPE	NO.	LENGTH	WEIGHT	NO.	LENGTH	WEIGHT	NO.	LENGTH	WEIGHT	NO.	LENGTH	WEIGHT	NO.	LENGTH	WEIGHT	NO.	LENGTH	WEIGHT	NO.	LENGTH	WEIGHT	NO.	LENGTH	WEIGHT	NO.	LENGTH	WEIGHT
6x2	WALLS & FLOOR	⊔	4	23'-8	142	4	25'-2	151	4	22'-11	138	4	22'-11	138	4	23'-1	139	4	23'-1	139	4	23'-1	139	4	23'-3	140	4	23'-5	141
6x4	WALLS VERT.	—	--	---	--	--	---	--	8	4'-0	48	8	4'-9	57	8	5'-6	66	8	6'-3	75	8	7'-0	84	8	7'-9	93	8	8'-6	102
6y3	WALLS HORIZ.	⊐	8	7'-8	92	10	7'-8	115	12	7'-8	138	12	7'-8	138	14	7'-10	165	16	7'-10	188	18	7'-10	212	18	7'-11	214	20	8'-1	243
6y4	FLOOR VERT.	⊐	12	9'-0	162	12	9'-0	162	12	9'-0	162	12	9'-0	162	12	9'-0	162	12	9'-0	162	12	9'-0	162	12	9'-0	162	13	9'-0	176
6z1	FLOOR VERT.	⊓	12	4'-1	74	12	4'-1	74	12	4'-1	74	12	4'-1	74	12	4'-1	74	12	4'-1	74	12	4'-1	74	12	4'-1	74	13	4'-1	80
TOTAL WEIGHT (LBS.)					470			502			560			569			606			638			671			683			742
CONCRETE (CY)	FOOTING		2.8			2.8			2.8			2.8			2.8			2.8			2.8			2.8			2.9		
	WALLS		0.8			1.0			1.2			1.4			1.6			1.8			2.0			2.3			2.5		
	TOTAL		3.6			3.8			4.0			4.2			4.4			4.6			4.8			5.1			5.4		

BENT BAR DETAILS

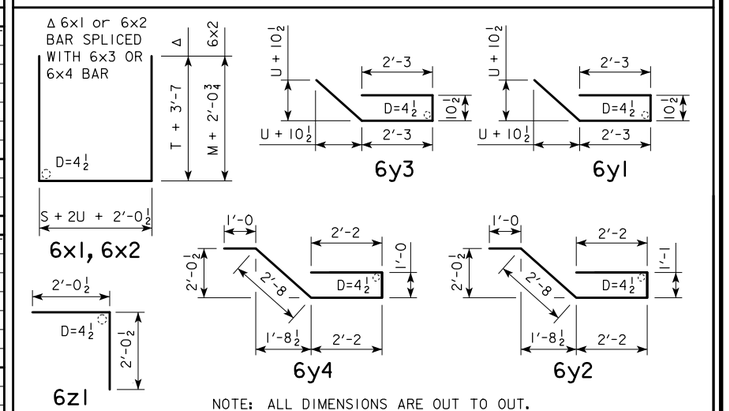

NOTE: ALL DIMENSIONS ARE OUT TO OUT.
D = PIN DIAMETER

BARREL & CHUTE DIMENSIONS

S = CULVERT SPAN
H = CULVERT HEIGHT

S x H	M	T	U	BT	BU
10' x 4'	3'-0	1'-1	0'-9	1'-0	0'-9
10' x 5'	3'-9	1'-1	0'-9	1'-0	0'-9
10' x 6'	4'-6	1'-1	0'-9	1'-0	0'-9
10' x 7'	5'-3	1'-1	0'-9	1'-0	0'-9
10' x 8'	6'-0	1'-1	0'-10	1'-0	0'-9
10' x 9'	6'-9	1'-1	0'-10	1'-0	0'-9
10' x 10'	7'-6	1'-1	0'-10	1'-0	0'-10
10' x 11'	8'-3	1'-1	0'-11	1'-0	0'-11
10' x 12'	9'-0	1'-1	1'-0	1'-0	1'-0

NOTES:

1. DIMENSIONS AND QUANTITIES SHOWN BASED ON 'U' FLUME WALLS, 'BU' BARREL WALLS, 'T' FLUME FLOOR AND 'BT' BARREL FLOOR THICKNESSES.
2. CHANGE LENGTHS OF BARS 6x1 AND ADJUST REINFORCING STEEL AND CONCRETE QUANTITIES ACCORDINGLY FOR WALL AND FLOOR THICKNESSES OTHER THAN SHOWN.
3. FLOOR BARS m1 ARE TO BE SHORTENED 6" AT BELL JOINTS.
4. SEE STANDARD SHEET RCF-01-12 FOR GENERAL INFORMATION.

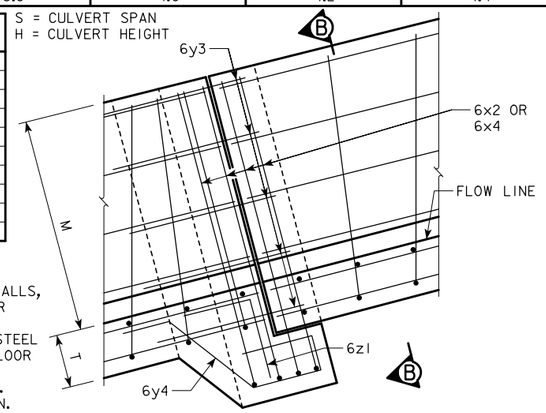

PART ELEVATION - CHUTE BELL JT.

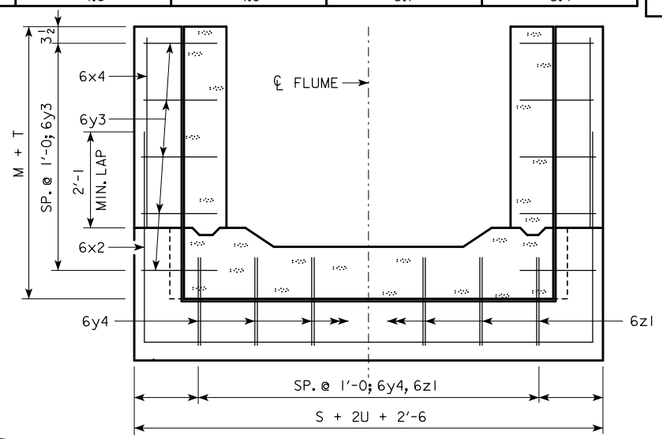

SECTION B-B

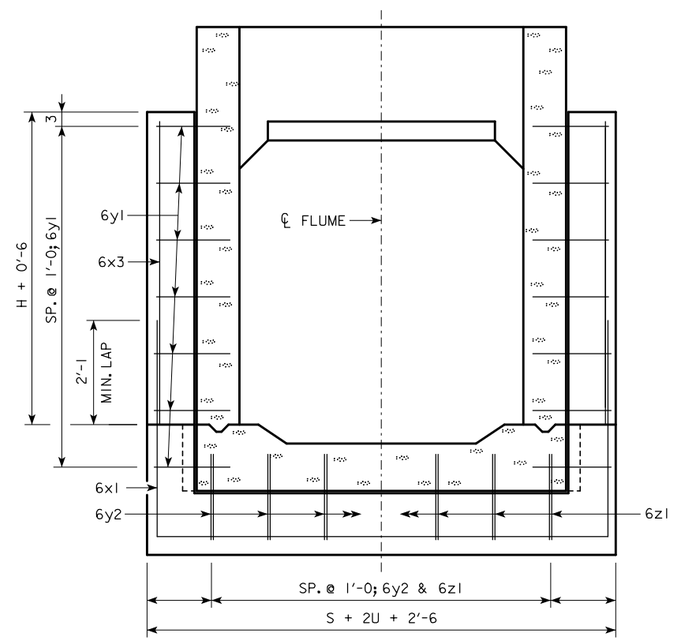

SECTION A-A

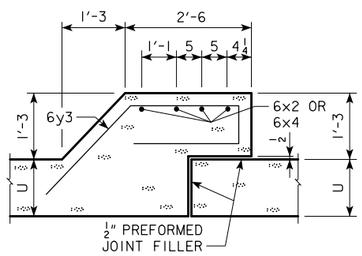

CHUTE WALLS

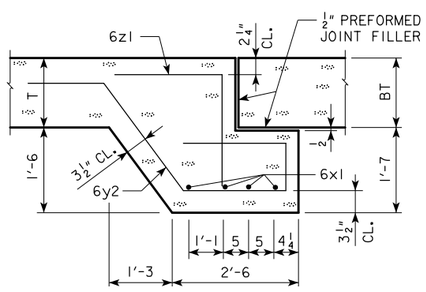

JUNCTION FOOTING

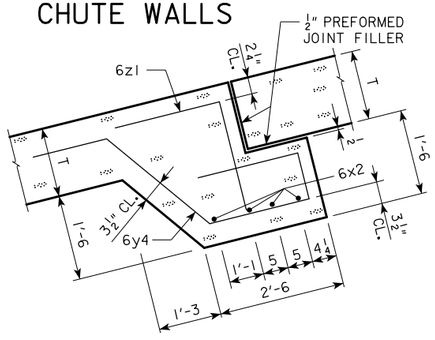

CHUTE FOOTING

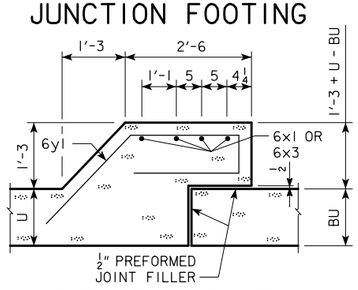

JUNCTION WALLS

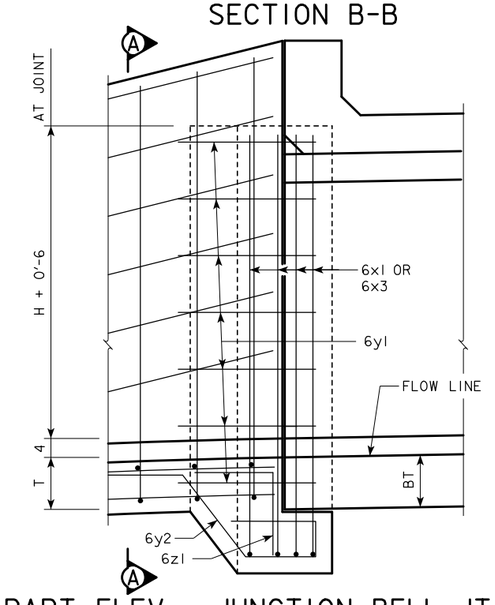

PART ELEV. - JUNCTION BELL JT.

LATEST REVISION DATE

APPROVED BY BRIDGE ENGINEER

IOWA DOT Highway Division

STANDARD DESIGN

REINFORCED CONCRETE BOX CULVERTS

APRIL, 2012

FLUME BELL JOINT DETAILS

10' SPAN

FBJ-04-12

ENGLISHSIGNEDFLUMES.DGN - FBJ-04-12 - THIS SHEET ISSUED 04-12.

ESTIMATE OF QUANTITIES - FLUME BELL JOINTS

JUNCTION BELL JOINT			12' x 4'			12' x 5'			12' x 6'			12' x 7'			12' x 8'			12' x 9'			12' x 10'			12' x 11'			12' x 12'		
BAR	LOCATION	SHAPE	NO.	LENGTH	WEIGHT	NO.	LENGTH	WEIGHT	NO.	LENGTH	WEIGHT	NO.	LENGTH	WEIGHT	NO.	LENGTH	WEIGHT	NO.	LENGTH	WEIGHT	NO.	LENGTH	WEIGHT	NO.	LENGTH	WEIGHT	NO.	LENGTH	WEIGHT
6x1	WALLS & FLOOR		4	25'-1	151	4	25'-1	151	4	25'-1	151	4	25'-1	151	4	25'-3	152	4	25'-3	152	4	25'-3	152	4	25'-5	153	4	25'-7	154
6x3	WALLS VERT.		8	4'-4	52	8	5'-4	64	8	6'-4	76	8	7'-4	88	8	8'-4	100	8	9'-4	112	8	10'-4	124	8	11'-4	136	8	12'-4	148
6y1	WALLS HORIZ.		12	7'-8	138	14	7'-8	161	16	7'-8	184	18	7'-8	207	20	7'-10	235	22	7'-10	259	24	7'-10	282	26	7'-11	309	28	8'-1	340
6y2	FLOOR VERT.		14	9'-2	193	14	9'-2	193	14	9'-2	193	14	9'-2	193	14	9'-2	193	14	9'-2	193	14	9'-2	193	14	9'-2	193	15	9'-2	207
6z1	FLOOR VERT.		14	4'-3	89	14	4'-3	89	14	4'-3	89	14	4'-3	89	14	4'-3	89	14	4'-3	89	14	4'-3	89	14	4'-3	89	15	4'-3	96
TOTAL WEIGHT (LBS.)					623			658			693			728			769			805			840			880			945
		FOOTING		3.3			3.3			3.3			3.3			3.3			3.3			3.3			3.3			3.4	
CONCRETE (CY)		WALLS		1.3			1.6			1.9			2.1			2.4			2.7			3.0			3.3			3.6	
		TOTAL		4.6			4.9			5.2			5.4			5.7			6.0			6.3			6.6			7.0	

CHUTE BELL JOINT			12' x 4'			12' x 5'			12' x 6'			12' x 7'			12' x 8'			12' x 9'			12' x 10'			12' x 11'			12' x 12'		
BAR	LOCATION	SHAPE	NO.	LENGTH	WEIGHT	NO.	LENGTH	WEIGHT	NO.	LENGTH	WEIGHT	NO.	LENGTH	WEIGHT	NO.	LENGTH	WEIGHT	NO.	LENGTH	WEIGHT	NO.	LENGTH	WEIGHT	NO.	LENGTH	WEIGHT	NO.	LENGTH	WEIGHT
6x2	WALLS & FLOOR		4	25'-10	155	4	27'-4	164	4	25'-1	151	4	25'-1	151	4	25'-3	152	4	25'-3	152	4	25'-3	152	4	25'-5	153	4	25'-7	154
6x4	WALLS VERT.		--	---	--	--	---	--	8	4'-0	48	8	4'-9	57	8	5'-6	66	8	6'-3	75	8	7'-0	84	8	7'-9	93	8	8'-6	102
6y3	WALLS HORIZ.		8	7'-8	92	10	7'-8	115	12	7'-8	138	12	7'-8	138	14	7'-10	165	16	7'-10	188	18	7'-10	212	18	7'-11	214	20	8'-1	243
6y4	FLOOR VERT.		14	9'-1	191	14	9'-1	191	14	9'-1	191	14	9'-1	191	14	9'-1	191	14	9'-1	191	14	9'-1	191	14	9'-1	191	15	9'-1	205
6z1	FLOOR VERT.		14	4'-3	89	14	4'-3	89	14	4'-3	89	14	4'-3	89	14	4'-3	89	14	4'-3	89	14	4'-3	89	14	4'-3	89	15	4'-3	96
TOTAL WEIGHT (LBS.)					527			559			617			626			663			695			728			740			800
		FOOTING		3.2			3.2			3.2			3.2			3.2			3.2			3.2			3.3			3.3	
CONCRETE (CY)		WALLS		0.8			1.0			1.2			1.4			1.6			1.8			2.0			2.3			2.5	
		TOTAL		4.0			4.2			4.4			4.6			4.8			5.0			5.2			5.6			5.8	

BENT BAR DETAILS

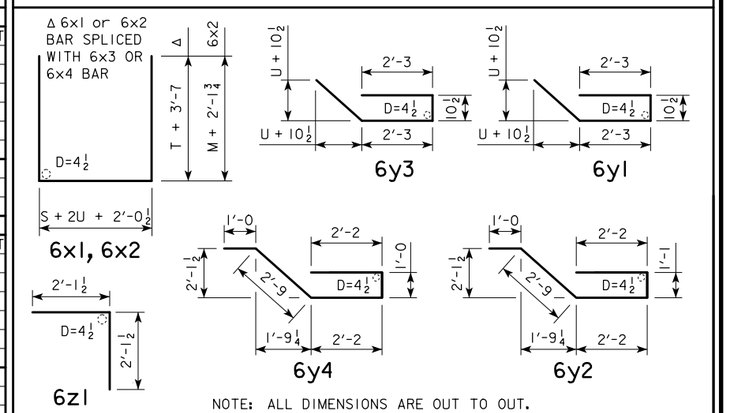

NOTE: ALL DIMENSIONS ARE OUT TO OUT.
D = PIN DIAMETER

BARREL & CHUTE DIMENSIONS

S = CULVERT SPAN
H = CULVERT HEIGHT

S x H	M	T	U	BT	BU
12' x 4'	3'-0	1'-2	0'-9	1'-1	0'-9
12' x 5'	3'-9	1'-2	0'-9	1'-1	0'-9
12' x 6'	4'-6	1'-2	0'-9	1'-1	0'-9
12' x 7'	5'-3	1'-2	0'-9	1'-1	0'-9
12' x 8'	6'-0	1'-2	0'-10	1'-1	0'-9
12' x 9'	6'-9	1'-2	0'-10	1'-1	0'-9
12' x 10'	7'-6	1'-2	0'-10	1'-1	0'-10
12' x 11'	8'-3	1'-2	0'-11	1'-1	0'-11
12' x 12'	9'-0	1'-2	1'-0	1'-1	1'-0

NOTES:

1. DIMENSIONS AND QUANTITIES SHOWN BASED ON 'U' FLUME WALLS, 'BU' BARREL WALLS, 'T' FLUME FLOOR AND 'BT' BARREL FLOOR THICKNESSES.
2. CHANGE LENGTHS OF BARS 6x1 AND ADJUST REINFORCING STEEL AND CONCRETE QUANTITIES ACCORDINGLY FOR WALL AND FLOOR THICKNESSES OTHER THAN SHOWN.
3. FLOOR BARS m1 ARE TO BE SHORTENED 6" AT BELL JOINTS.
4. SEE STANDARD SHEET RCF-01-12 FOR GENERAL INFORMATION.

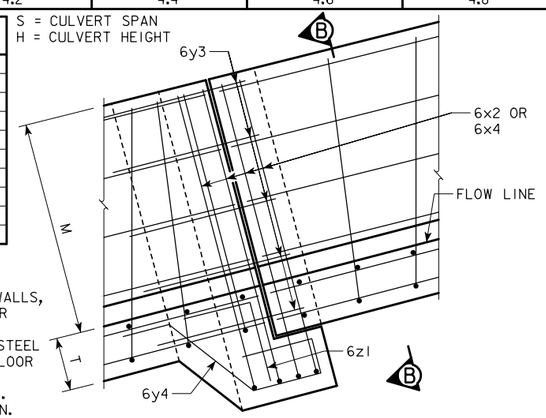

PART ELEVATION - CHUTE BELL JT.

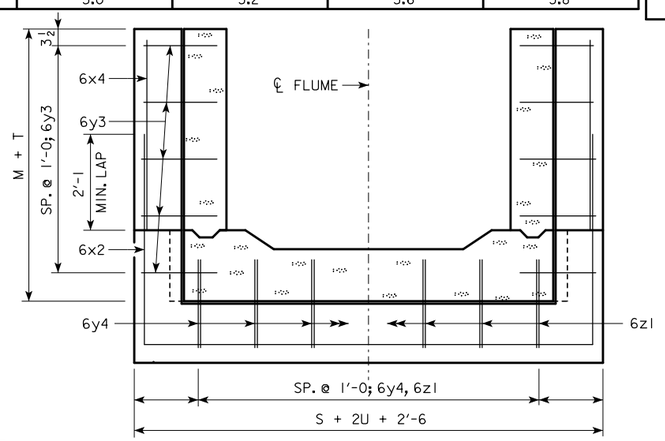

SECTION B-B

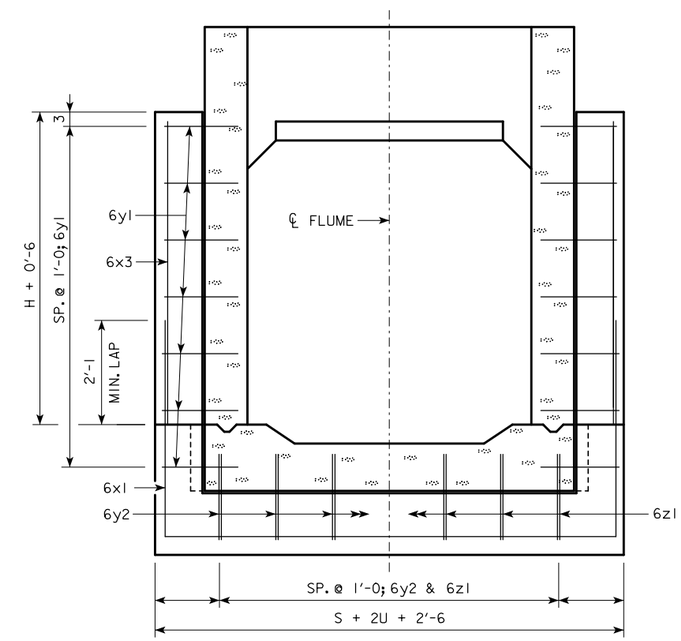

SECTION A-A

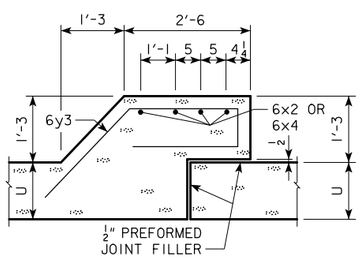

CHUTE WALLS

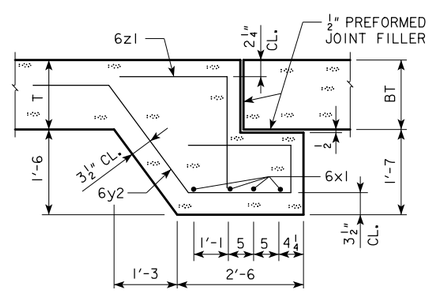

JUNCTION FOOTING

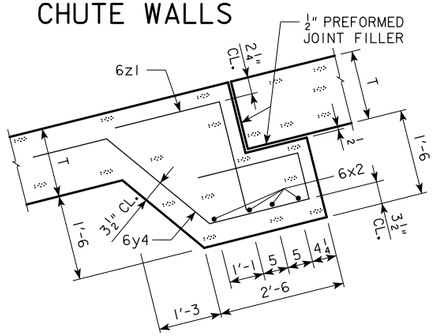

CHUTE FOOTING

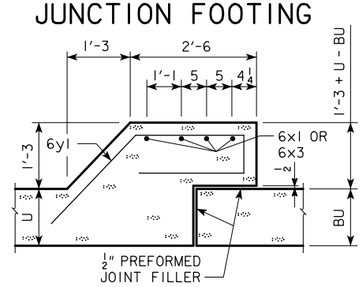

JUNCTION WALLS

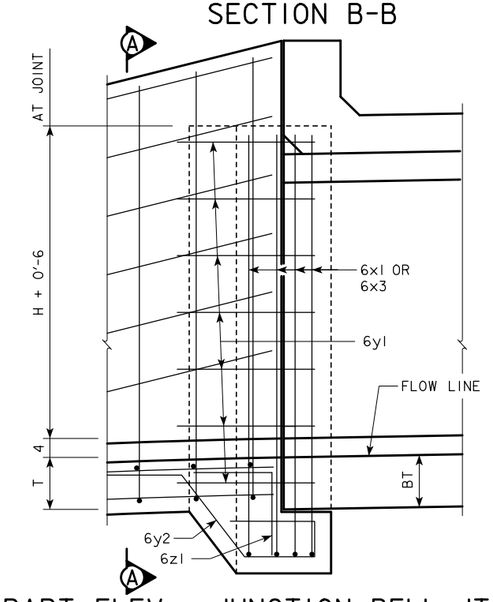

PART ELEV. - JUNCTION BELL JT.

LATEST REVISION DATE

APPROVED BY BRIDGE ENGINEER

IOWA DOT Highway Division

STANDARD DESIGN

REINFORCED CONCRETE BOX CULVERTS

APRIL, 2012

FLUME BELL JOINT DETAILS

12' SPAN

FBJ-05-12

ENGLISHSIGNEDFLUMES.DGN - FBJ-05-12 - THIS SHEET ISSUED 04-12.