IOWA DOT
Highway Division

SINGLE REINFORCED CONCRETE BOX CULVERT STANDARDS

GENERAL NOTES:

1. THE RCB CULVERT SECTIONS ARE DESIGNED FOR HL-93 LIVE LOAD AND EARTH FILLS OF VARYING HEIGHTS.
2. VERTICAL EARTH PRESSURE, EV=0.120 kcf.
   HORIZONTAL EARTH PRESSURE, EHmax = 0.060 kcf MAX, EHmin = 0.030 kcf.
3. THE RCB CULVERT SECTIONS ARE DESIGNED FOR CLASS I EXPOSURE CONDITIONS EXCEPT: CLASS 2 EXPOSURE CONDITION IS UTILIZED FOR THE SLAB DESIGN IN 0' FILL INSTANCES.
4. ALL SLAB AND FLOOR REINFORCING STEEL IS TO BE SUPPORTED AT INTERVALS OF NOT MORE THAN 3'-0 IN EITHER DIRECTION AS OUTLINED IN THE STANDARD SPECIFICATIONS.
5. THE CLEAR DISTANCE FROM FACE OF CONCRETE TO NEAR EDGE OR END OF REINFORCING BAR TO BE 2" UNLESS OTHERWISE NOTED.
6. EXCEPT FOR DOWEL BARS 5r1 IN SLAB, LONGITUDINAL REINFORCING IS NOT TO EXTEND THRU THE CONSTRUCTION JOINTS.
7. FLOOR OF BARREL IS TO BE FINISHED SMOOTH. SIDES OF FOOTING ARE TO BE FORMED TO INSURE CORRECT LINE AND GRADE.
8. THE PERMISSIBLE CONSTRUCTION JOINT AT THE TOP OF THE WALLS MAY BE LOWERED AT THE CONTRACTOR'S OPTION WITH ENGINEER'S APPROVAL.
9. THE REINFORCEMENT SUPPLIED FOR THIS STRUCTURE SHALL BE GRADE 60 REINFORCEMENT IN ACCORDANCE WITH THE STANDARD SPECIFICATIONS. THE DESIGN STRESSES ARE BASED ON GRADE 60 REINFORCEMENT.
10. THE VERTICAL BARS IN THE WALLS MAY BE SPLICED ABOVE THE FOOTING AT THE CONTRACTOR'S OPTION AS FOLLOWS:

BAR SIZE NUMBER	4	5	6	7	8	9
MINIMUM SPLICE LENGTH	17"	21"	25"	31"	41"	51"

    THIS SPLICE, IF USED, WILL BE AT THE CONTRACTOR'S EXPENSE.
11. REINFORCING BAR CLEARANCES WILL BE AS FOLLOWS:
    EDGE CLEARANCES: 2" EXCEPT
    TOP OF FLOOR $2\frac{1}{4}$" TO NEAR TRANSVERSE REINFORCING BAR
    BOTTOM OF FLOOR $3\frac{1}{2}$" TO NEAR TRANSVERSE REINFORCING BAR
    END CLEARANCES:
    VERTICAL TOP 2"
    VERTICAL BOTTOM 3" OR $3\frac{1}{2}$" IF OVERALL HEIGHT OF THE CULVERT IS NOT TO A FULL INCH
    TRANSVERSE 2"
12. ALL CONSTRUCTION JOINTS SHALL BE FORMED WITH A BEVELED KEYWAY EXCEPT AT BELL JOINTS.
13. ALL BEVELED KEYWAYS SHALL BE CENTERED.
14. KEYWAY SIZE SHALL BE 2x4 EXCEPT AS FOLLOWS:
    KEYWAY BETWEEN THE FLOOR AND WALL SHALL BE 2x6 WHEN THE WALL IS GREATER THAN 10 INCHES WIDE.
15. KEYWAY DIMENSIONS SHOWN ON THE PLANS ARE BASED ON NOMINAL DIMENSIONS UNLESS STATED OTHERWISE. IN ADDITION, THE BEVEL USED ON THE KEYWAY SHALL BE LIMITED TO A MAXIMUM OF 10 DEGREES FROM VERTICAL.
16. IF 0' OF FILL IS SPECIFIED, DETAILS FOR PAVING NOTCH AND REFERENCE TO EPOXY COATING OF SLAB REINFORCING STEEL, IF APPLICABLE, SHALL BE INCLUDED IN THE FINAL PLANS.
17. ALL DIMENSIONS ARE IN FEET AND INCHES UNLESS OTHERWISE NOTED OR SHOWN.
18. SEE CURRENT STANDARD SPECIFICATIONS REGARDING CONCRETE FORM REMOVAL.
19. THESE CULVERT STANDARDS LABEL ALL REINFORCING STEEL WITH ENGLISH NOTATION (5a1 IS $\frac{5}{8}$ INCH DIAMETER BAR). ENGLISH REINFORCING STEEL RECEIVED IN THE FIELD MAY DISPLAY THE FOLLOWING "BAR DESIGNATION". THE "BAR DESIGNATION" IS THE STAMPED IMPRESSION ON THE REINFORCING BARS, AND IS EQUIVALENT TO THE BAR DIAMETER IN MILLIMETERS.

ENGLISH SIZE	4	5	6	7	8	9
BAR DESIGNATION	13	16	19	22	25	29

20. IN THE EVENT THE SLAB THICKNESS AT THE BARREL END SECTION EXCEEDS 18 INCHES, THE CULVERT PARAPET SHALL EXTEND A MINIMUM OF 6 INCHES ABOVE THE TOP OF THE CULVERT SLAB. REFER TO THE CULVERT DESIGN MANUAL FOR INSTRUCTIONS. THESE DETAILS ARE TO BE INCLUDED IN THE DESIGN PLANS TO ADDRESS THESE SITUATIONS.

INDEX FOR SINGLE CULVERT STANDARDS:

RCB G1-12 INDEX & GENERAL NOTES
RCB G2-12 TYPICAL CULVERT BARREL DETAILS
RCB 3-3-12 CULVERT BARREL DETAILS, 3 x 3 BARREL SECTIONS
RCB 4-4-12 CULVERT BARREL DETAILS, 4 x 4 BARREL SECTIONS
RCB 5-3-12 CULVERT BARREL DETAILS, 5 x 3 BARREL SECTIONS
RCB 5-4-12 CULVERT BARREL DETAILS, 5 x 4 BARREL SECTIONS
RCB 5-5-12 CULVERT BARREL DETAILS, 5 x 5 BARREL SECTIONS
RCB 5-6-12 CULVERT BARREL DETAILS, 5 x 6 BARREL SECTIONS
RCB 6-3-12 CULVERT BARREL DETAILS, 6 x 3 BARREL SECTIONS
RCB 6-4-12 CULVERT BARREL DETAILS, 6 x 4 BARREL SECTIONS
RCB 6-5-12 CULVERT BARREL DETAILS, 6 x 5 BARREL SECTIONS
RCB 6-6-12 CULVERT BARREL DETAILS, 6 x 6 BARREL SECTIONS
RCB 6-7-12 CULVERT BARREL DETAILS, 6 x 7 BARREL SECTIONS
RCB 6-8-12 CULVERT BARREL DETAILS, 6 x 8 BARREL SECTIONS
RCB 8-4-12 CULVERT BARREL DETAILS, 8 x 4 BARREL SECTIONS
RCB 8-5-12 CULVERT BARREL DETAILS, 8 x 5 BARREL SECTIONS
RCB 8-6-12 CULVERT BARREL DETAILS, 8 x 6 BARREL SECTIONS
RCB 8-7-12 CULVERT BARREL DETAILS, 8 x 7 BARREL SECTIONS
RCB 8-8-12 CULVERT BARREL DETAILS, 8 x 8 BARREL SECTIONS
RCB 8-9-12 CULVERT BARREL DETAILS, 8 x 9 BARREL SECTIONS
RCB 8-10-12 CULVERT BARREL DETAILS, 8 x 10 BARREL SECTIONS
RCB 10-4-12 CULVERT BARREL DETAILS, 10 x 4 BARREL SECTIONS
RCB 10-5-12 CULVERT BARREL DETAILS, 10 x 5 BARREL SECTIONS
RCB 10-6-12 CULVERT BARREL DETAILS, 10 x 6 BARREL SECTIONS
RCB 10-7-12 CULVERT BARREL DETAILS, 10 x 7 BARREL SECTIONS
RCB 10-8-12 CULVERT BARREL DETAILS, 10 x 8 BARREL SECTIONS
RCB 10-9-12 CULVERT BARREL DETAILS, 10 x 9 BARREL SECTIONS
RCB 10-10-12 CULVERT BARREL DETAILS, 10 x 10 BARREL SECTIONS
RCB 10-11-12 CULVERT BARREL DETAILS, 10 x 11 BARREL SECTIONS
RCB 10-12-12 CULVERT BARREL DETAILS, 10 x 12 BARREL SECTIONS
RCB 12-4-12 CULVERT BARREL DETAILS, 12 x 4 BARREL SECTIONS
RCB 12-5-12 CULVERT BARREL DETAILS, 12 x 5 BARREL SECTIONS
RCB 12-6-12 CULVERT BARREL DETAILS, 12 x 6 BARREL SECTIONS
RCB 12-7-12 CULVERT BARREL DETAILS, 12 x 7 BARREL SECTIONS
RCB 12-8-12 CULVERT BARREL DETAILS, 12 x 8 BARREL SECTIONS
RCB 12-9-12 CULVERT BARREL DETAILS, 12 x 9 BARREL SECTIONS
RCB 12-10-12 CULVERT BARREL DETAILS, 12 x 10 BARREL SECTIONS
RCB 12-11-12 CULVERT BARREL DETAILS, 12 x 11 BARREL SECTIONS
RCB 12-12-12 CULVERT BARREL DETAILS, 12 x 12 BARREL SECTIONS
PWH 0-1-12 PARALLEL WING HDWLS., 0° SKEW, DIMENSION TABLE
PWH 0-2-12 PARALLEL WING HDWLS., 0° SKEW, CROSS SECTION DETAILS
PWH 0-3-12 PARALLEL WING HDWLS., 0° SKEW, WINGWALL ELEV. & BOTT. APRON REINF.
PWH 0-4-12 PARALLEL WING HDWLS., 0° SKEW, TOP APRON REINF.
PWH 0-5-12 PARALLEL WING HDWLS., 0° SKEW, QUANTITY TABULATION, 12'-0 SPAN
PWH 0-6-12 PARALLEL WING HDWLS., 0° SKEW, QUANTITY TABULATION, 10'-0 SPAN
PWH 0-7-12 PARALLEL WING HDWLS., 0° SKEW, QUANTITY TABULATION, 8'-0 SPAN
PWH 0-8-12 PARALLEL WING HDWLS., 0° SKEW, QUANTITY TABULATION, 6'-0 SPAN
PWH 0-9-12 PARALLEL WING HDWLS., 0° SKEW, QUANTITY TABULATION, 5'-0, 4'-0, & 3'-0 SPANS
PWH 15-1-12 PARALLEL WING HDWLS., 15° SKEW, DIMENSION TABLE
PWH 15-2-12 PARALLEL WING HDWLS., 15° SKEW, CROSS SECTION DETAILS
PWH 15-3-12 PARALLEL WING HDWLS., 15° SKEW, WINGWALL ELEV. & BOTT. APRON REINF.
PWH 15-4-12 PARALLEL WING HDWLS., 15° SKEW, TOP APRON REINF.
PWH 15-5-12 PARALLEL WING HDWLS., 15° SKEW, QUANTITY TABULATION, 12'-0 SPAN
PWH 15-6-12 PARALLEL WING HDWLS., 15° SKEW, QUANTITY TABULATION, 10'-0 SPAN
PWH 15-7-12 PARALLEL WING HDWLS., 15° SKEW, QUANTITY TABULATION, 8'-0 SPAN
PWH 15-8-12 PARALLEL WING HDWLS., 15° SKEW, QUANTITY TABULATION, 6'-0 SPAN
PWH 15-9-12 PARALLEL WING HDWLS., 15° SKEW, QUANTITY TABULATION, 5'-0 SPAN
PWH 30-1-12 PARALLEL WING HDWLS., 30° SKEW, DIMENSION TABLE
PWH 30-2-12 PARALLEL WING HDWLS., 30° SKEW, CROSS SECTION DETAILS
PWH 30-3-12 PARALLEL WING HDWLS., 30° SKEW, WINGWALL ELEV. & BOTT. APRON REINF.
PWH 30-4-12 PARALLEL WING HDWLS., 30° SKEW, TOP APRON REINF.
PWH 30-5-12 PARALLEL WING HDWLS., 30° SKEW, QUANTITY TABULATION, 12'-0 SPAN
PWH 30-6-12 PARALLEL WING HDWLS., 30° SKEW, QUANTITY TABULATION, 10'-0 SPAN
PWH 30-7-12 PARALLEL WING HDWLS., 30° SKEW, QUANTITY TABULATION, 8'-0 SPAN
PWH 30-8-12 PARALLEL WING HDWLS., 30° SKEW, QUANTITY TABULATION, 6'-0 SPAN
PWH 30-9-12 PARALLEL WING HDWLS., 30° SKEW, QUANTITY TABULATION, 5'-0 SPAN

INDEX FOR SINGLE CULVERT STANDARDS (CONT'D):

PWH 45-1-12 PARALLEL WING HDWLS., 45° SKEW, DIMENSION TABLE
PWH 45-2-12 PARALLEL WING HDWLS., 45° SKEW, CROSS SECTION DETAILS
PWH 45-3-12 PARALLEL WING HDWLS., 45° SKEW, WINGWALL ELEV. & BOTT. APRON REINF.
PWH 45-4-12 PARALLEL WING HDWLS., 45° SKEW, TOP APRON REINF.
PWH 45-5-12 PARALLEL WING HDWLS., 45° SKEW, QUANTITY TABULATION, 12'-0 SPAN
PWH 45-6-12 PARALLEL WING HDWLS., 45° SKEW, QUANTITY TABULATION, 10'-0 SPAN
PWH 45-7-12 PARALLEL WING HDWLS., 45° SKEW, QUANTITY TABULATION, 8'-0 SPAN
PWH 45-8-12 PARALLEL WING HDWLS., 45° SKEW, QUANTITY TABULATION, 6'-0 SPAN
PWH 45-9-12 PARALLEL WING HDWLS., 45° SKEW, QUANTITY TABULATION, 5'-0 SPAN
CBJ 1-12 CULVERT BELL JOINTS, 3', 4' & 5' SPANS
CBJ 2-12 CULVERT BELL JOINTS, 6' & 8' SPANS
CBJ 3-12 CULVERT BELL JOINTS, 10' & 12' SPANS
CBJ 4-12 CULVERT BELL JOINTS, ALL SPANS

SPECIFICATIONS:

DESIGN:
AASHTO LRFD BRIDGE DESIGN SPECIFICATIONS, 5TH ED., SERIES OF 2010.

CONSTRUCTION:
IOWA DEPARTMENT OF TRANSPORTATION STANDARD SPECIFICATIONS FOR HIGHWAY AND BRIDGE CONSTRUCTION, CURRENT SERIES, PLUS APPLICABLE GENERAL SUPPLEMENTAL SPECIFICATIONS, DEVELOPMENTAL SPECIFICATIONS, SUPPLEMENTAL SPECIFICATIONS AND SPECIAL PROVISIONS

DESIGN STRESSES:

DESIGN STRESSES FOR THE FOLLOWING MATERIALS ARE IN ACCORDANCE WITH THE AASHTO LRFD BRIDGE DESIGN SPECIFICATIONS, 5TH ED., SERIES OF 2010:
REINFORCING STEEL IN ACCORDANCE WITH AASHTO LRFD SECTION 5, GRADE 60.
CONCRETE IN ACCORDANCE WITH AASHTO LRFD SECTION 5, f'c = 4.0 KSI.

07-2016
LATEST REVISION DATE

APPROVED BY BRIDGE ENGINEER

IOWA DOT Highway Division

STANDARD DESIGN
SINGLE REINFORCED CONCRETE BOX CULVERTS
APRIL, 2012

INDEX & GENERAL NOTES

RCB G1-12

REVISED 10-12 - DELETED THE REFERENCE TO THE DESIGN MANUAL IN NOTE 19 PERTAINING TO DETAILS IN THE DESIGN MANUAL.
REVISED 01-2016 - UPDATED NOTE 17 PERTAINING TO CONCRETE FORMS. (OLD NOTE: REMAINING IN PLACE 5 DAYS OR LONGER, EXCEPT MIN. CONC. FLEXURAL STRENGTH BEFORE REMOVAL SHALL BE 575 PSI).
REVISED 07-2016 - ADDED THE DESIGN VERTICAL AND HORIZONTAL EARTH PRESSURES AND RENUMBERED THE GENERAL NOTES. CHANGED DISTANCE IN NOTE #20 FROM 20 INCHES TO 18.
ENGLISHLRFDSIGNEDSINGLECULVERTS.DGN - RCB G1-12 - THIS SHEET ISSUED 04-12.

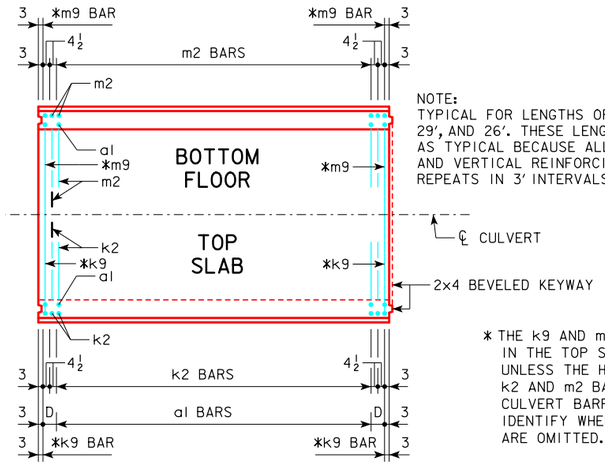

NOTE:
TYPICAL FOR LENGTHS OF 38', 35', 32', 29', AND 26'. THESE LENGTHS ARE SHOWN AS TYPICAL BECAUSE ALL TRANSVERSE AND VERTICAL REINFORCING STEEL SPACING REPEATS IN 3' INTERVALS.

℄ CULVERT

2x4 BEVELED KEYWAY

* THE k9 AND m9 BARS ARE TO BE PLACED IN THE TOP SLAB AND BOTTOM FLOOR UNLESS THE HORIZONTAL LEGS OF THE k2 AND m2 BARS TOUCH OR LAP. THE CULVERT BARREL DETAIL STANDARDS IDENTIFY WHEN THE k9 AND m9 BARS ARE OMITTED.

STANDARD SECTION PLAN VIEW

(KEYWAY IS TO BE OMITTED WHEN BELL JOINTS ARE USED)

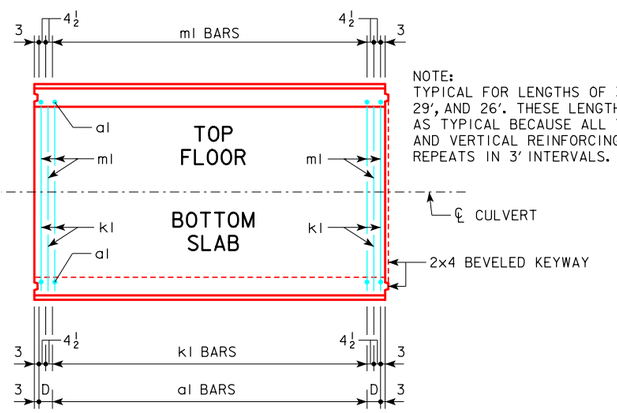

NOTE:
TYPICAL FOR LENGTHS OF 38', 35', 32', 29', AND 26'. THESE LENGTHS ARE SHOWN AS TYPICAL BECAUSE ALL TRANSVERSE AND VERTICAL REINFORCING STEEL SPACING REPEATS IN 3' INTERVALS.

℄ CULVERT

2x4 BEVELED KEYWAY

STANDARD SECTION PLAN VIEW

(KEYWAY IS TO BE OMITTED WHEN BELL JOINTS ARE USED)

CUT & RELOCATE BARS AS REQUIRED. k1 BARS ALL FILLS & k2 BARS 0' FILL ONLY. m1 BARS TO EXTEND INTO HEADWALL APRON. DISCARD CUT LENGTHS OF 2'-0 OR LESS.

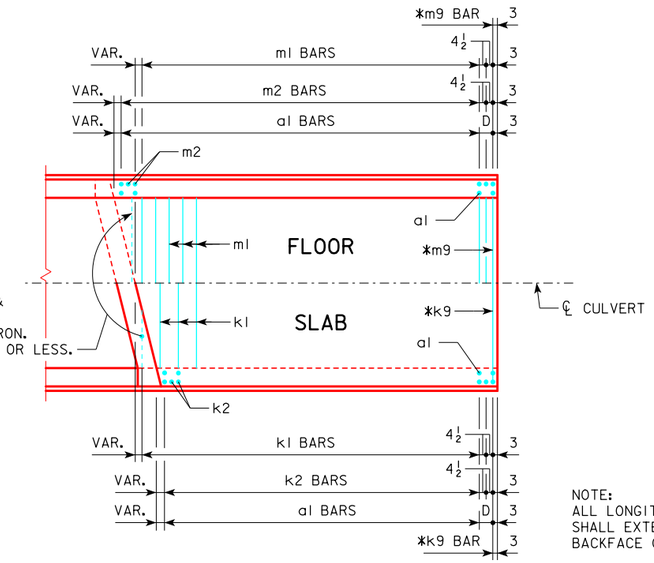

℄ CULVERT

TYPICAL SKEW

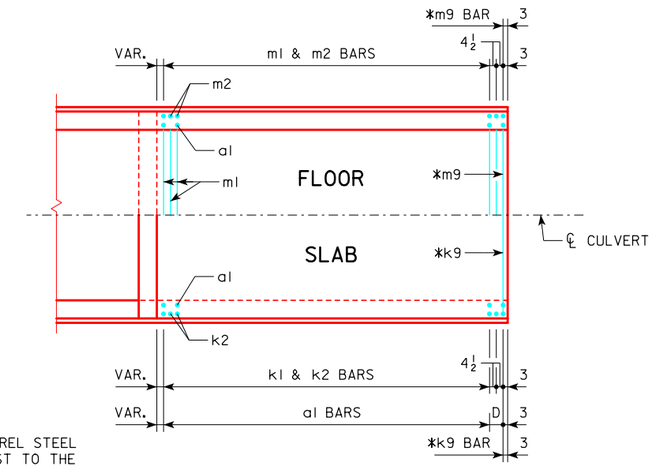

℄ CULVERT

NOTE:
ALL LONGITUDINAL BARREL STEEL SHALL EXTEND AT LEAST TO THE BACKFACE OF PARAPET.

0° SKEW

END SECTION PLAN VIEWS

(KEYWAYS NOT SHOWN)

NOTE:
END SECTION DETAILS SHOWN ARE FOR A 15° SKEW BARREL. USE FOR SKEWS OF 30° & 45° BY INCREASING THE NUMBER OF TRANSVERSE REINFORCING BARS REQUIRED TO BE CUT AND RELOCATED.

5r1 BARS - ONE CONST. JT.		
SPAN	NO.	WEIGHT (LB)
3'-0	4	15
4'-0	5	18
5'-0	6	22
6'-0	7	26
8'-0	9	33
10'-0	11	40
12'-0	13	47

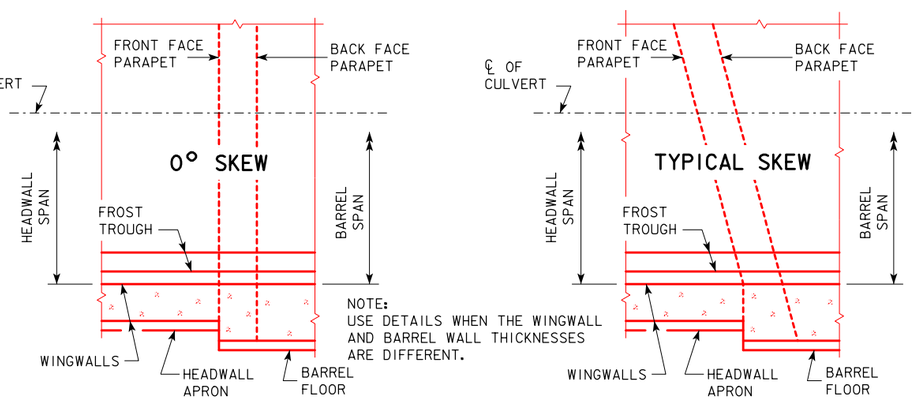

NOTE:
USE DETAILS WHEN THE WINGWALL AND BARREL WALL THICKNESSES ARE DIFFERENT.

TRANSITION WALL DETAILS

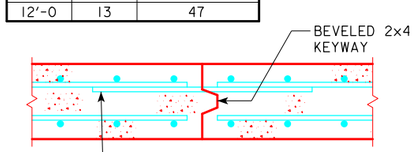

ONE SET OF 5r1 x 3'-6 DOWEL BARS @ 1'-0 SPACING REQUIRED IN SLAB AT ALL CULVERT BARREL JOINTS, EXCEPT JOINTS WITH BELL JOINTS. SEE TABLE FOR NUMBER REQUIRED AND TOTAL WEIGHT.

TOP SLAB CONSTRUCTION JOINT DETAIL

NOTE:
DIMENSIONS LISTED ON THIS SHEET TO BE USED IN CONJUNCTION WITH DIMENSIONS AND QUANTITIES FOR BARREL SECTION SHEETS.

03-2016
LATEST REVISION DATE

APPROVED BY BRIDGE ENGINEER

IOWA DOT Highway Division

STANDARD DESIGN

SINGLE REINFORCED CONCRETE BOX CULVERTS

APRIL, 2012

TYPICAL CULVERT BARREL DETAILS

RCB G2-12

REVISED 07-14 - TRANSITION WALL DETAILS.
REVISED 03-2016 - ADDED SKEWED TRANSITION WALL DETAILS.
ENGLISHLRFDSIGNEDSINGLECULVERTS.DGN - RCB G2-12 - THIS SHEET ISSUED 04-12.

VARIABLE DIMENSIONS AND QUANTITIES FOR 3 x 3 BARREL SECTIONS

DIMENSIONS							BAR LIST																																				QUANTITIES				
							a1			b1			e1			e2			f1			f2			k1			k2					k9		m1			m2					m9		CONCRETE (CY/FT)				STEEL
FILL	S	H	A	B	C	D	SIZE	SP.	L	SIZE	SP.	NO.	SIZE	SP.	NO.	SIZE	SP.	NO.	SIZE	SP.	NO.	SIZE	SP.	NO.	SIZE	SP.	L	SIZE	SP.	L	H	V	SIZE	L	SIZE	SP.	L	SIZE	SP.	L	H	V	SIZE	L	SLAB	FLOOR	WALLS	TOTAL	(LB/FT)
0	3	3	9	10	9	9	4	9	4'-6	4	6	12	4	12	2	4	11	4	4	12	4	4	11	4	4	6	4'-2	5	12	6'-0	3'-0	3'-0	--	--	4	9	4'-8	5	12	6'-6	3'-3	3'-3	--	--	0.157	0.191	0.146	0.494	63.42
1	3	3	8	10	9	9	4	9	4'-5	4	6	12	4	12	2	4	11	4	4	12	4	4	11	4	5	12	4'-2	5	12	6'-0	3'-0	3'-0	--	--	4	9	4'-8	5	12	6'-6	3'-3	3'-3	--	--	0.144	0.191	0.146	0.481	62.32
2	3	3	8	10	9	9	4	9	4'-5	4	6	12	4	12	2	4	11	4	4	12	4	4	11	4	4	9	4'-2	5	12	6'-0	3'-0	3'-0	--	--	4	9	4'-8	5	12	5'-7	2'-4	3'-3	--	--	0.144	0.191	0.146	0.481	59.47
3-5	3	3	8	10	9	9	4	9	4'-5	4	6	12	4	12	2	4	11	4	4	12	4	4	11	4	4	12	4'-2	5	12	5'-2	2'-4	2'-10	--	--	4	12	4'-8	5	12	5'-4	2'-1	3'-3	5	4'-8	0.144	0.191	0.146	0.481	55.16
6-8	3	3	8	10	9	9	4	9	4'-5	4	6	12	4	12	2	4	15	4	4	12	4	4	15	4	4	12	4'-2	5	12	4'-8	1'-10	2'-10	5	4'-2	4	12	4'-8	5	12	5'-1	1'-10	3'-3	5	4'-8	0.144	0.191	0.146	0.481	53.97
9-10	3	3	8	10	9	9	4	9	4'-5	4	6	12	4	12	2	4	14	4	4	12	4	4	12	4	4	12	4'-2	5	12	4'-7	1'-9	2'-10	5	4'-2	4	12	4'-8	5	12	4'-10	1'-7	3'-3	5	4'-8	0.144	0.191	0.146	0.481	53.21
11-15	3	3	8	10	9	9	4	9	4'-5	4	6	12	4	12	2	4	14	4	4	12	4	4	12	4	4	12	4'-2	5	12	4'-7	1'-9	2'-10	5	4'-2	4	12	4'-8	5	12	4'-10	1'-7	3'-3	5	4'-8	0.144	0.191	0.146	0.481	53.21
16-20	3	3	8	10	9	9	4	9	4'-5	4	6	12	4	12	2	4	14	4	4	12	4	4	12	4	4	9	4'-2	5	12	4'-7	1'-9	2'-10	5	4'-2	4	9	4'-8	5	12	4'-10	1'-7	3'-3	5	4'-8	0.144	0.191	0.146	0.481	55.08
21-25	3	3	8	10	9	9	4	9	4'-5	4	6	12	4	12	2	4	14	4	4	12	4	4	12	4	5	12	4'-2	5	12	4'-7	1'-9	2'-10	5	4'-2	5	12	4'-8	5	12	4'-10	1'-7	3'-3	5	4'-8	0.144	0.191	0.146	0.481	56.79
26-30	3	3	8	10	9	9	4	9	4'-5	4	6	12	4	12	2	4	14	4	4	12	4	4	12	4	4	6	4'-2	5	12	4'-7	1'-9	2'-10	5	4'-2	4	6	4'-8	5	12	4'-10	1'-7	3'-3	5	4'-8	0.144	0.191	0.146	0.481	58.79
31-35	3	3	8	10	9	9	4	9	4'-5	4	6	12	4	12	2	4	14	4	4	12	4	4	12	4	4	6	4'-2	5	12	4'-7	1'-9	2'-10	5	4'-2	4	6	4'-8	5	12	4'-10	1'-7	3'-3	5	4'-8	0.144	0.191	0.146	0.481	58.79
36-40	3	3	8	10	9	9	4	9	4'-5	4	6	12	4	12	2	4	14	4	4	12	4	4	12	4	5	9	4'-2	5	12	4'-7	1'-9	2'-10	5	4'-2	6	9	4'-8	5	12	4'-10	1'-7	3'-3	5	4'-8	0.144	0.191	0.146	0.481	62.66
41-45	3	3	8	10	9	9	4	9	4'-5	4	6	12	4	12	2	4	14	4	4	12	4	4	12	4	5	9	4'-2	5	12	4'-7	1'-9	2'-10	5	4'-2	6	9	4'-8	5	12	4'-10	1'-7	3'-3	5	4'-8	0.144	0.191	0.146	0.481	62.66
46-50	3	3	8	10	9	9	4	9	4'-5	4	6	12	4	12	2	4	14	4	4	12	4	4	12	4	6	9	4'-2	5	12	4'-7	1'-9	2'-10	5	4'-2	6	9	4'-8	5	12	4'-10	1'-7	3'-3	5	4'-8	0.144	0.191	0.146	0.481	65.34
51-55	3	3	8	10	9	9	4	9	4'-5	4	6	12	4	12	2	4	14	4	4	12	4	4	12	4	6	9	4'-2	5	12	4'-7	1'-9	2'-10	5	4'-2	6	9	4'-8	5	12	4'-10	1'-7	3'-3	5	4'-8	0.144	0.191	0.146	0.481	65.34

BENT BAR DETAIL

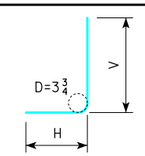

k2 & m2

NOTE:
ALL DIMENSIONS ARE OUT TO OUT.
D = PIN DIAMETER.

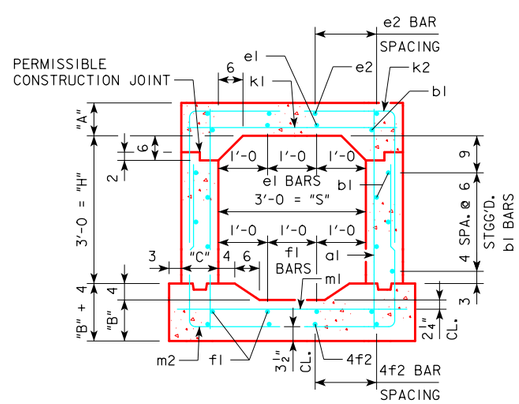

3 x 3 BARREL SECTION

NOTES:

1. DIMENSIONS LISTED ON THIS SHEET TO BE USED IN CONJUNCTION WITH SHEET RCB G2-12.
2. THE k2 AND m2 BARS HORIZONTAL LEGS MAY LAP IN LOW FILL SITUATIONS.
3. DIMENSIONS "A", "B", "C", "D", AND "SP." LISTED IN THE BAR LIST ARE IN INCHES.

LATEST REVISION DATE

APPROVED BY BRIDGE ENGINEER

IOWA DOT Highway Division

STANDARD DESIGN

SINGLE REINFORCED CONCRETE BOX CULVERTS

APRIL, 2012

CULVERT BARREL DETAILS

3 x 3 BARREL SECTIONS

RCB 3-3-12

ENGLISHLRFDSIGNEDSINGLECULVERTS.DGN - RCB 3-3-12 - THIS SHEET ISSUED 04-12.

VARIABLE DIMENSIONS AND QUANTITIES FOR 4 x 4 BARREL SECTIONS

DIMENSIONS							BAR LIST																																				QUANTITIES				
							a1			b1			e1			e2			f1			f2			k1			k2					k9		m1			m2					m9		CONCRETE (CY/FT)				STEEL
FILL	S	H	A	B	C	D	SIZE	SP.	L	SIZE	SP.	NO.	SIZE	SP.	NO.	SIZE	SP.	NO.	SIZE	SP.	NO.	SIZE	SP.	NO.	SIZE	SP.	L	SIZE	SP.	L	H	V	SIZE	L	SIZE	SP.	L	SIZE	SP.	L	H	V	SIZE	L	SLAB	FLOOR	WALLS	TOTAL	(LB/FT)
0	4	4	10	10	9	9	4	9	5'-7	4	6	16	5	12	3	4	15	4	4	12	5	4	15	4	6	9	5'-2	5	12	6'-6	3'-6	3'-0	--	--	5	12	5'-8	5	12	7'-5	3'-2	4'-3	--	--	0.202	0.222	0.202	0.626	80.84
1	4	4	8	10	9	9	4	9	5'-5	4	6	16	4	12	3	4	15	4	4	12	5	4	15	4	4	6	5'-2	5	12	6'-4	3'-6	2'-10	--	--	5	12	5'-8	5	12	7'-9	3'-6	4'-3	--	--	0.168	0.222	0.202	0.592	76.00
2	4	4	8	10	9	9	4	9	5'-5	4	6	16	4	12	3	4	15	4	4	12	5	4	15	4	4	6	5'-2	5	12	6'-4	3'-6	2'-10	--	--	5	12	5'-8	5	12	7'-0	2'-9	4'-3	--	--	0.168	0.222	0.202	0.592	74.32
3-5	4	4	8	10	9	9	4	9	5'-5	4	6	16	4	12	3	4	15	4	4	12	5	4	11	6	4	9	5'-2	5	12	5'-8	2'-10	2'-10	--	--	4	9	5'-8	5	12	6'-8	2'-5	4'-3	5	5'-8	0.168	0.222	0.202	0.592	70.42
6-8	4	4	8	10	9	9	4	9	5'-5	4	6	16	4	12	3	4	18	4	4	12	5	4	18	4	4	9	5'-2	5	12	4'-11	2'-1	2'-10	5	5'-2	4	9	5'-8	5	12	6'-4	2'-1	4'-3	5	5'-8	0.168	0.222	0.202	0.592	66.97
9-10	4	4	8	10	9	9	4	9	5'-5	4	6	16	4	12	3	4	15	4	4	12	5	4	15	4	4	12	5'-2	5	12	4'-8	1'-10	2'-10	5	5'-2	4	9	5'-8	5	12	6'-1	1'-10	4'-3	5	5'-8	0.168	0.222	0.202	0.592	64.74
11-15	4	4	8	10	9	9	4	9	5'-5	4	6	16	4	12	3	4	15	4	4	12	5	4	15	4	5	12	5'-2	5	12	4'-8	1'-10	2'-10	5	5'-2	4	6	5'-8	5	12	6'-1	1'-10	4'-3	5	5'-8	0.168	0.222	0.202	0.592	69.18
16-20	4	4	8	10	9	9	4	9	5'-5	4	6	16	4	12	3	4	15	4	4	12	5	4	15	4	4	6	5'-2	5	12	4'-8	1'-10	2'-10	5	5'-2	4	6	5'-8	5	12	6'-1	1'-10	4'-3	5	5'-8	0.168	0.222	0.202	0.592	70.37
21-25	4	4	8	10	9	9	4	9	5'-5	4	6	16	4	12	3	4	14	4	4	12	5	4	15	4	5	9	5'-2	5	12	4'-7	1'-9	2'-10	5	5'-2	6	9	5'-8	5	12	6'-1	1'-10	4'-3	5	5'-8	0.168	0.222	0.202	0.592	74.92
26-30	4	4	8	10	9	9	4	9	5'-5	4	6	16	4	12	3	4	14	4	4	12	5	4	15	4	6	9	5'-2	5	12	4'-7	1'-9	2'-10	5	5'-2	6	9	5'-8	5	12	6'-1	1'-10	4'-3	5	5'-8	0.168	0.222	0.202	0.592	78.21
31-35	4	4	8	10	9	9	4	9	5'-5	4	6	16	4	12	3	4	14	4	4	12	5	4	15	4	6	9	5'-2	5	12	4'-7	1'-9	2'-10	5	5'-2	6	9	5'-8	5	12	6'-1	1'-10	4'-3	5	5'-8	0.168	0.222	0.202	0.592	78.21
36-40	4	4	8	10	9	9	4	9	5'-5	4	6	16	4	12	3	4	14	4	4	12	5	4	14	4	6	9	5'-2	5	12	4'-7	1'-9	2'-10	5	5'-2	5	6	5'-8	5	12	6'-0	1'-9	4'-3	5	5'-8	0.168	0.222	0.202	0.592	78.13
41-45	4	4	8	10	9	9	4	12	5'-5	4	6	16	4	12	3	4	14	4	4	12	5	4	13	4	5	6	5'-2	4	6	4'-7	1'-9	2'-10	4	5'-2	5	6	5'-8	4	6	5'-11	1'-8	4'-3	4	5'-8	0.168	0.222	0.202	0.592	80.34
46-50	4	4	8	10.5	9	9	4	12	5'-5	4	6	16	4	12	3	4	14	4	4	12	5	4	14	4	7	9	5'-2	4	6	4'-7	1'-9	2'-10	4	5'-2	7	9	5'-8	4	6	6'-1	1'-9	4'-4	4	5'-8	0.168	0.231	0.202	0.601	88.79
51-55	4	4	8	10.5	9	9	4	9	5'-5	4	6	16	4	12	3	4	14	4	4	12	5	4	14	4	6	6	5'-2	4	6	4'-7	1'-9	2'-10	4	5'-2	6	6	5'-8	4	6	6'-1	1'-9	4'-4	4	5'-8	0.168	0.231	0.202	0.601	93.16

BENT BAR DETAIL

BARS	D
4	3
5	$3\frac{3}{4}$

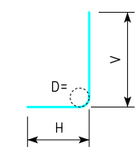

k2 & m2

NOTE:
ALL DIMENSIONS ARE OUT TO OUT.
D = PIN DIAMETER.

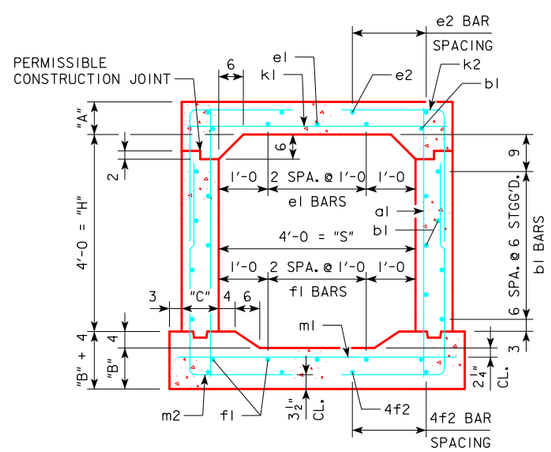

4 x 4 BARREL SECTION

NOTES:

1. DIMENSIONS LISTED ON THIS SHEET TO BE USED IN CONJUNCTION WITH SHEET RCB G2-12.
2. THE k2 AND m2 BARS HORIZONTAL LEGS MAY LAP IN LOW FILL SITUATIONS.
3. DIMENSIONS "A", "B", "C", "D", AND "SP." LISTED IN THE BAR LIST ARE IN INCHES.

LATEST REVISION DATE

APPROVED BY BRIDGE ENGINEER

IOWA DOT Highway Division

STANDARD DESIGN

SINGLE REINFORCED CONCRETE BOX CULVERTS

APRIL, 2012

CULVERT BARREL DETAILS

4 x 4 BARREL SECTIONS

RCB 4-4-12

ENGLISHLRFDSIGNEDSINGLECULVERTS.DGN - RCB 4-4-12 - THIS SHEET ISSUED 04-12.

VARIABLE DIMENSIONS AND QUANTITIES FOR 5 x 3 BARREL SECTIONS

DIMENSIONS							BAR LIST																																				QUANTITIES				
							a1			b1			e1			e2			f1			f2			k1			k2					k9		m1			m2					m9		CONCRETE (CY/FT)				STEEL
FILL	S	H	A	B	C	D	SIZE	SP.	L	SIZE	SP.	NO.	SIZE	SP.	NO.	SIZE	SP.	NO.	SIZE	SP.	NO.	SIZE	SP.	NO.	SIZE	SP.	L	SIZE	SP.	L	H	V	SIZE	L	SIZE	SP.	L	SIZE	SP.	L	H	V	SIZE	L	SLAB	FLOOR	WALLS	TOTAL	(LB/FT)
0	5	3	10	10	9	9	4	9	4'-7	4	6	12	5	12	4	4	11	6	4	12	6	4	11	6	6	9	6'-2	5	12	5'-6	2'-6	3'-0	5	6'-2	6	9	6'-8	5	12	5'-9	2'-6	3'-3	5	6'-8	0.233	0.253	0.146	0.632	85.13
1	5	3	8.5	10	9	9	4	9	4'-5	4	6	12	4	12	4	4	11	6	4	12	6	4	11	6	6	12	6'-2	5	12	5'-4	2'-5	2'-11	5	6'-2	6	12	6'-8	5	12	5'-8	2'-5	3'-3	5	6'-8	0.203	0.253	0.146	0.602	76.74
2	5	3	8	10	9	9	4	9	4'-5	4	6	12	4	12	4	4	9	6	4	12	6	4	9	6	5	9	6'-2	5	12	5'-0	2'-2	2'-10	5	6'-2	4	6	6'-8	5	12	5'-5	2'-2	3'-3	5	6'-8	0.193	0.253	0.146	0.592	72.61
3-4	5	3	8	10	9	9	4	9	4'-5	4	6	12	4	12	4	4	17	4	4	12	6	4	17	4	4	6	6'-2	5	12	4'-10	2'-0	2'-10	5	6'-2	4	6	6'-8	5	12	5'-3	2'-0	3'-3	5	6'-8	0.193	0.253	0.146	0.592	68.58
5-8	5	3	8	10	9	9	4	9	4'-5	4	6	12	4	12	4	4	17	4	4	12	6	4	16	4	5	12	6'-2	5	12	4'-10	2'-0	2'-10	5	6'-2	4	6	6'-8	5	12	5'-2	1'-11	3'-3	5	6'-8	0.193	0.253	0.146	0.592	67.00
9-10	5	3	8	10	9	9	4	9	4'-5	4	6	12	4	12	4	4	15	4	4	12	6	4	15	4	4	9	6'-2	5	12	4'-8	1'-10	2'-10	5	6'-2	4	6	6'-8	5	12	5'-1	1'-10	3'-3	5	6'-8	0.193	0.253	0.146	0.592	65.24
11-15	5	3	8	10	9	9	4	9	4'-5	4	6	12	4	12	4	4	15	4	4	12	6	4	15	4	4	6	6'-2	5	12	4'-8	1'-10	2'-10	5	6'-2	4	6	6'-8	5	12	5'-1	1'-10	3'-3	5	6'-8	0.193	0.253	0.146	0.592	67.84
16-20	5	3	8	10	9	9	4	9	4'-5	4	6	12	4	12	4	4	15	4	4	12	6	4	15	4	6	9	6'-2	5	12	4'-8	1'-10	2'-10	5	6'-2	6	9	6'-8	5	12	5'-1	1'-10	3'-3	5	6'-8	0.193	0.253	0.146	0.592	77.37
21-25	5	3	8	10	9	9	4	12	4'-5	4	6	12	4	12	4	4	14	4	4	12	6	4	14	4	6	9	6'-2	4	6	4'-7	1'-9	2'-10	4	6'-2	5	6	6'-8	4	6	5'-0	1'-9	3'-3	4	6'-8	0.193	0.253	0.146	0.592	79.32
26-30	5	3	8	10	9	9	4	9	4'-5	4	6	12	4	12	4	4	14	4	4	12	6	4	14	4	5	6	6'-2	4	6	4'-7	1'-9	2'-10	4	6'-2	5	6	6'-8	4	6	5'-0	1'-9	3'-3	4	6'-8	0.193	0.253	0.146	0.592	81.29
31-35	5	3	8	10.5	9	9	5	12	4'-5	4	6	12	4	12	4	4	14	4	4	12	6	4	14	4	7	9	6'-2	4	6	4'-7	1'-9	2'-10	4	6'-2	6	6	6'-8	4	6	5'-1	1'-9	3'-4	4	6'-8	0.193	0.263	0.146	0.602	93.82
36-40	5	3	8.5	11	9	9	5	12	4'-6	4	6	12	4	12	4	4	14	4	4	12	6	4	13	4	6	6	6'-2	4	6	4'-8	1'-9	2'-11	4	6'-2	6	6	6'-8	4	6	5'-0	1'-8	3'-4	4	6'-8	0.203	0.274	0.146	0.623	95.18
41-45	5	3	9.5	11.5	9	9	5	12	4'-8	4	6	12	4	12	4	4	14	4	4	12	6	4	13	4	6	6	6'-2	4	6	4'-8	1'-9	2'-11	4	6'-2	6	6	6'-8	4	6	5'-1	1'-8	3'-5	4	6'-8	0.223	0.285	0.146	0.654	95.79
46-50	5	3	10	12	9	9	5	12	4'-9	4	6	12	4	12	4	4	13	4	4	12	6	4	14	4	6	6	6'-2	4	6	4'-8	1'-8	3'-0	4	6'-2	6	6	6'-8	4	6	5'-2	1'-9	3'-5	4	6'-8	0.233	0.296	0.146	0.675	96.18
51-55	5	3	10.5	12.5	9	9	5	12	4'-10	4	6	12	4	12	4	4	13	4	4	12	6	4	14	4	6	6	6'-2	4	6	4'-8	1'-8	3'-0	4	6'-2	6	6	6'-8	4	6	5'-3	1'-9	3'-6	4	6'-8	0.243	0.307	0.146	0.696	96.58

BENT BAR DETAIL

BARS	D
4	3
5	$3\frac{3}{4}$

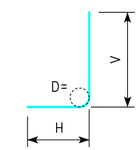

k2 & m2

NOTE:
ALL DIMENSIONS ARE OUT TO OUT.
D = PIN DIAMETER.

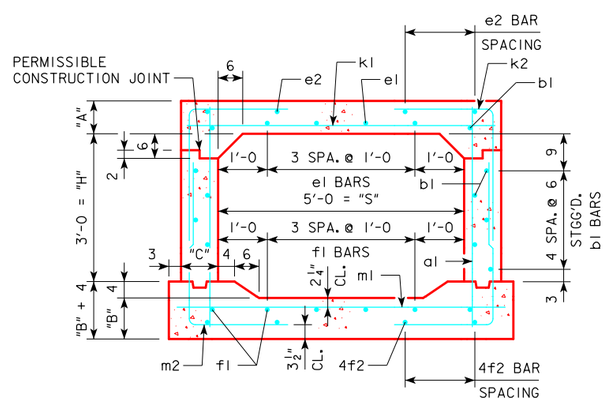

5 x 3 BARREL SECTION

NOTES:

1. DIMENSIONS LISTED ON THIS SHEET TO BE USED IN CONJUNCTION WITH SHEET RCB G2-12.
2. THE k2 AND m2 BARS HORIZONTAL LEGS MAY LAP IN LOW FILL SITUATIONS.
3. DIMENSIONS "A", "B", "C", "D", AND "SP." LISTED IN THE BAR LIST ARE IN INCHES.

LATEST REVISION DATE

APPROVED BY BRIDGE ENGINEER

IOWA DOT Highway Division

STANDARD DESIGN

SINGLE REINFORCED CONCRETE BOX CULVERTS

APRIL, 2012

CULVERT BARREL DETAILS

5 x 3 BARREL SECTIONS

RCB 5-3-12

ENGLISHLRFDSIGNEDSINGLECULVERTS.DGN - RCB 5-3-12 - THIS SHEET ISSUED 04-12.

VARIABLE DIMENSIONS AND QUANTITIES FOR 5 x 4 BARREL SECTIONS

DIMENSIONS							BAR LIST																																				QUANTITIES				
							a1			b1			e1			e2			f1			f2			k1			k2					k9		m1			m2					m9		CONCRETE (CY/FT)				STEEL
FILL	S	H	A	B	C	D	SIZE	SP.	L	SIZE	SP.	NO.	SIZE	SP.	NO.	SIZE	SP.	NO.	SIZE	SP.	NO.	SIZE	SP.	NO.	SIZE	SP.	L	SIZE	SP.	L	H	V	SIZE	L	SIZE	SP.	L	SIZE	SP.	L	H	V	SIZE	L	SLAB	FLOOR	WALLS	TOTAL	(LB/FT)
0	5	4	10	10	9	9	4	9	5'-7	4	6	16	5	12	4	4	11	6	4	12	6	4	12	6	6	9	6'-2	5	12	7'-0	4'-0	3'-0	--	--	6	9	6'-8	5	12	6'-10	2'-7	4'-3	5	6'-8	0.233	0.253	0.202	0.688	95.05
1	5	4	8.5	10	9	9	4	9	5'-5	4	6	16	4	12	4	4	11	6	4	12	6	4	12	6	6	12	6'-2	5	12	6'-11	4'-0	2'-11	--	--	6	9	6'-8	5	12	6'-11	2'-8	4'-3	5	6'-8	0.203	0.253	0.202	0.658	90.39
2	5	4	8	10	9	9	4	9	5'-5	4	6	16	4	12	4	4	13	6	4	12	6	4	11	6	5	9	6'-2	5	12	5'-8	2'-10	2'-10	5	6'-2	5	9	6'-8	5	12	6'-8	2'-5	4'-3	5	6'-8	0.193	0.253	0.202	0.648	82.05
3-4	5	4	8	10	9	9	4	9	5'-5	4	6	16	4	12	4	4	10	6	4	12	6	4	10	6	4	6	6'-2	5	12	5'-2	2'-4	2'-10	5	6'-2	4	6	6'-8	5	12	6'-6	2'-3	4'-3	5	6'-8	0.193	0.253	0.202	0.648	79.24
5-8	5	4	8	10	9	9	4	9	5'-5	4	6	16	4	12	4	4	18	4	4	12	6	4	18	4	5	12	6'-2	5	12	4'-11	2'-1	2'-10	5	6'-2	4	6	6'-8	5	12	6'-4	2'-1	4'-3	5	6'-8	0.193	0.253	0.202	0.648	74.29
9-10	5	4	8	10	9	9	4	9	5'-5	4	6	16	4	12	4	4	16	4	4	12	6	4	16	4	4	9	6'-2	5	12	4'-9	1'-11	2'-10	5	6'-2	4	6	6'-8	5	12	6'-2	1'-11	4'-3	5	6'-8	0.193	0.253	0.202	0.648	72.29
11-15	5	4	8	10	9	9	4	9	5'-5	4	6	16	4	12	4	4	16	4	4	12	6	4	16	4	4	6	6'-2	5	12	4'-9	1'-11	2'-10	5	6'-2	6	9	6'-8	5	12	6'-2	1'-11	4'-3	5	6'-8	0.193	0.253	0.202	0.648	79.84
16-20	5	4	8	10	9	9	4	9	5'-5	4	6	16	4	12	4	4	16	4	4	12	6	4	16	4	6	9	6'-2	5	12	4'-9	1'-11	2'-10	5	6'-2	6	9	6'-8	5	12	6'-2	1'-11	4'-3	5	6'-8	0.193	0.253	0.202	0.648	84.42
21-25	5	4	8	10	9	9	4	9	5'-5	4	6	16	4	12	4	4	15	4	4	12	6	4	16	4	6	9	6'-2	5	12	4'-8	1'-10	2'-10	5	6'-2	5	6	6'-8	5	12	6'-2	1'-11	4'-3	5	6'-8	0.193	0.253	0.202	0.648	84.34
26-30	5	4	8	10	9	9	4	12	5'-5	4	6	16	4	12	4	4	14	4	4	12	6	4	14	4	5	6	6'-2	4	6	4'-7	1'-9	2'-10	4	6'-2	5	6	6'-8	4	6	6'-0	1'-9	4'-3	4	6'-8	0.193	0.253	0.202	0.648	86.16
31-35	5	4	8	10.5	9	9	4	9	5'-5	4	6	16	4	12	4	4	14	4	4	12	6	4	14	4	7	9	6'-2	4	6	4'-7	1'-9	2'-10	4	6'-2	6	6	6'-8	4	6	6'-1	1'-9	4'-4	4	6'-8	0.193	0.263	0.202	0.658	99.45
36-40	5	4	8.5	11	9	9	4	9	5'-6	4	6	16	4	12	4	4	14	4	4	12	6	4	14	4	6	6	6'-2	4	6	4'-8	1'-9	2'-11	4	6'-2	6	6	6'-8	4	6	6'-1	1'-9	4'-4	4	6'-8	0.203	0.274	0.202	0.679	101.03
41-45	5	4	9.5	11.5	9	9	4	9	5'-8	4	6	16	4	12	4	4	14	4	4	12	6	4	15	4	6	6	6'-2	4	6	4'-8	1'-9	2'-11	4	6'-2	6	6	6'-8	4	6	6'-3	1'-10	4'-5	4	6'-8	0.223	0.285	0.202	0.710	101.76
46-50	5	4	10	12	9	9	4	9	5'-9	4	6	16	4	12	4	4	14	4	4	12	6	4	15	4	6	6	6'-2	4	6	4'-9	1'-9	3'-0	4	6'-2	6	6	6'-8	4	6	6'-3	1'-10	4'-5	4	6'-8	0.233	0.296	0.202	0.731	102.16
51-55	5	4	10.5	12.5	9	9	4	9	5'-10	4	6	16	4	12	4	4	15	4	4	12	6	4	15	4	8	9	6'-2	4	6	4'-10	1'-10	3'-0	4	6'-2	8	9	6'-8	4	6	6'-4	1'-10	4'-6	4	6'-8	0.243	0.307	0.202	0.752	111.47

BENT BAR DETAIL

BARS	D
4	3
5	$3\frac{3}{4}$

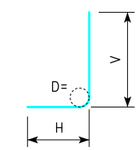

k2 & m2

NOTE:
ALL DIMENSIONS ARE OUT TO OUT.
D = PIN DIAMETER.

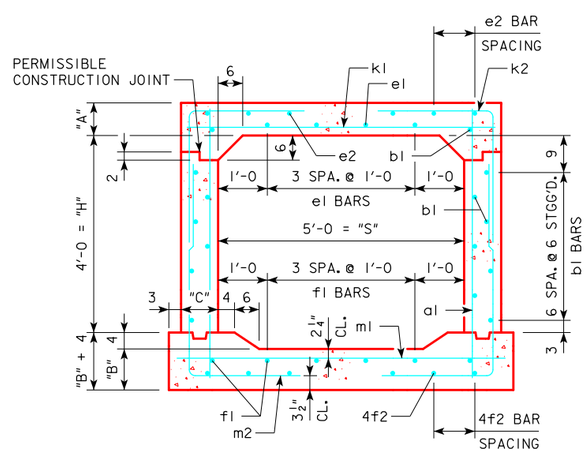

5 x 4 BARREL SECTION

NOTES:

1. DIMENSIONS LISTED ON THIS SHEET TO BE USED IN CONJUNCTION WITH SHEET RCB G2-12.
2. THE k2 AND m2 BARS HORIZONTAL LEGS MAY LAP IN LOW FILL SITUATIONS.
3. DIMENSIONS "A", "B", "C", "D", AND "SP." LISTED IN THE BAR LIST ARE IN INCHES.

LATEST REVISION DATE

APPROVED BY BRIDGE ENGINEER

IOWA DOT Highway Division

STANDARD DESIGN

SINGLE REINFORCED CONCRETE BOX CULVERTS

APRIL, 2012

CULVERT BARREL DETAILS

5 x 4 BARREL SECTIONS

RCB 5-4-12

ENGLISHLRFDSIGNEDSINGLECULVERTS.DGN - RCB 5-4-12 - THIS SHEET ISSUED 04-12.

VARIABLE DIMENSIONS AND QUANTITIES FOR 5 x 5 BARREL SECTIONS

DIMENSIONS							BAR LIST																																				QUANTITIES				
							a1			b1			e1			e2			f1			f2			k1			k2					k9		m1			m2					m9		CONCRETE (CY/FT)				STEEL
FILL	S	H	A	B	C	D	SIZE	SP.	L	SIZE	SP.	NO.	SIZE	SP.	NO.	SIZE	SP.	NO.	SIZE	SP.	NO.	SIZE	SP.	NO.	SIZE	SP.	L	SIZE	SP.	L	H	V	SIZE	L	SIZE	SP.	L	SIZE	SP.	L	H	V	SIZE	L	SLAB	FLOOR	WALLS	TOTAL	(LB/FT)
0	5	5	10	10	9	9	4	9	6'-7	4	6	20	5	12	4	4	11	6	4	12	6	4	11	6	6	9	6'-2	5	12	7'-0	4'-0	3'-0	--	--	6	9	6'-8	5	12	8'-10	3'-7	5'-3	--	--	0.233	0.253	0.257	0.743	103.63
1	5	5	8.5	10	9	9	4	9	6'-5	4	6	20	4	12	4	4	11	6	4	12	6	4	11	6	6	12	6'-2	5	12	6'-11	4'-0	2'-11	--	--	6	9	6'-8	5	12	9'-3	4'-0	5'-3	--	--	0.203	0.253	0.257	0.713	99.68
2	5	5	8	10	9	9	4	9	6'-5	4	6	20	4	12	4	4	11	6	4	12	6	4	11	6	5	9	6'-2	5	12	6'-10	4'-0	2'-10	--	--	6	9	6'-8	5	12	8'-4	3'-1	5'-3	--	--	0.193	0.253	0.257	0.703	96.39
3-4	5	5	8	10	9	9	4	9	6'-5	4	6	20	4	12	4	4	11	6	4	12	6	4	13	6	4	6	6'-2	5	12	6'-2	3'-1	3'-1	--	--	4	6	6'-8	5	12	8'-0	2'-9	5'-3	5	6'-8	0.193	0.253	0.257	0.703	88.92
5-8	5	5	8	10	9	9	4	9	6'-5	4	6	20	4	12	4	4	11	6	4	12	6	4	11	6	5	12	6'-2	5	12	5'-4	2'-6	2'-10	5	6'-2	4	6	6'-8	5	12	7'-8	2'-5	5'-3	5	6'-8	0.193	0.253	0.257	0.703	85.26
9-10	5	5	8	10	9	9	4	9	6'-5	4	6	20	4	12	4	4	17	4	4	12	6	4	17	4	5	12	6'-2	5	12	4'-10	2'-0	2'-10	5	6'-2	4	6	6'-8	5	12	7'-3	2'-0	5'-3	5	6'-8	0.193	0.253	0.257	0.703	80.55
11-15	5	5	8	10	9	9	4	9	6'-5	4	6	20	4	12	4	4	17	4	4	12	6	4	17	4	5	9	6'-2	5	12	4'-10	2'-0	2'-10	5	6'-2	6	9	6'-8	5	12	7'-3	2'-0	5'-3	5	6'-8	0.193	0.253	0.257	0.703	87.53
16-20	5	5	8	10	9	9	4	9	6'-5	4	6	20	4	12	4	4	17	4	4	12	6	4	17	4	6	9	6'-2	5	12	4'-10	2'-0	2'-10	5	6'-2	6	9	6'-8	5	12	7'-3	2'-0	5'-3	5	6'-8	0.193	0.253	0.257	0.703	91.47
21-25	5	5	8	10	9	9	4	12	6'-5	4	6	20	4	12	4	4	15	4	4	12	6	4	16	4	6	9	6'-2	4	6	4'-8	1'-10	2'-10	4	6'-2	5	6	6'-8	4	6	7'-2	1'-11	5'-3	4	6'-8	0.193	0.253	0.257	0.703	93.45
26-30	5	5	8	10	9	9	4	12	6'-5	4	6	20	4	12	4	4	15	4	4	12	6	4	16	4	5	6	6'-2	4	6	4'-8	1'-10	2'-10	4	6'-2	7	9	6'-8	4	6	7'-2	1'-11	5'-3	4	6'-8	0.193	0.253	0.257	0.703	98.47
31-35	5	5	8	10.5	9	9	4	9	6'-5	4	6	20	4	12	4	4	15	4	4	12	6	4	16	4	7	9	6'-2	4	6	4'-8	1'-10	2'-10	4	6'-2	6	6	6'-8	4	6	7'-3	1'-11	5'-4	4	6'-8	0.193	0.263	0.257	0.713	107.26
36-40	5	5	8.5	11	9	9	4	9	6'-6	4	6	20	4	12	4	4	15	4	4	12	6	4	16	4	6	6	6'-2	4	6	4'-9	1'-10	2'-11	4	6'-2	6	6	6'-8	4	6	7'-3	1'-11	5'-4	4	6'-8	0.203	0.274	0.257	0.734	108.84
41-45	5	5	9.5	11.5	9	9	4	9	6'-8	4	6	20	4	12	4	4	16	4	4	12	6	4	17	4	6	6	6'-2	5	9	4'-10	1'-11	2'-11	5	6'-2	6	6	6'-8	5	9	7'-5	2'-0	5'-5	5	6'-8	0.223	0.285	0.257	0.765	112.53
46-50	5	5	10	12	9	9	5	12	6'-9	4	6	20	4	12	4	4	16	4	4	12	6	4	17	4	6	6	6'-2	5	9	4'-11	1'-11	3'-0	5	6'-2	6	6	6'-8	5	9	7'-5	2'-0	5'-5	5	6'-8	0.233	0.296	0.257	0.786	115.29
51-55	5	5	10.5	12.5	9.5	9	5	12	6'-10	4	6	20	4	12	4	4	16	4	4	12	6	4	17	4	6	6	6'-3	5	9	5'-0	2'-0	3'-0	5	6'-3	6	6	6'-9	5	9	7'-7	2'-1	5'-6	5	6'-9	0.247	0.311	0.271	0.829	116.71

BENT BAR DETAIL

BARS	D
4	3
5	$3\frac{3}{4}$

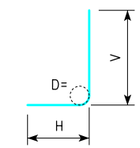

k2 & m2

NOTE:
ALL DIMENSIONS ARE OUT TO OUT.
D = PIN DIAMETER.

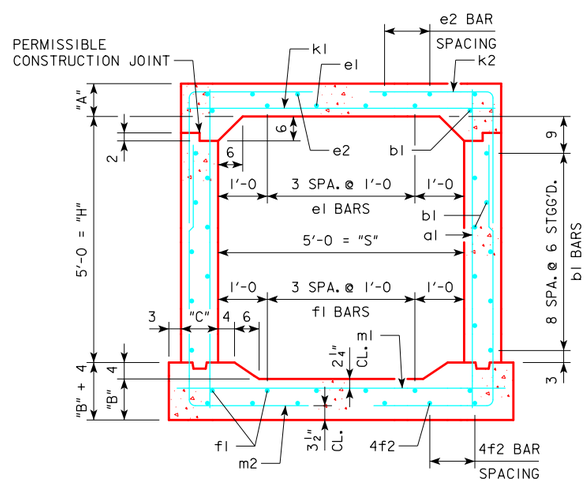

5 x 5 BARREL SECTION

NOTES:

1. DIMENSIONS LISTED ON THIS SHEET TO BE USED IN CONJUNCTION WITH SHEET RCB G2-12.
2. THE k2 AND m2 BARS HORIZONTAL LEGS MAY LAP IN LOW FILL SITUATIONS.
3. DIMENSIONS "A", "B", "C", "D", AND "SP." LISTED IN THE BAR LIST ARE IN INCHES.

LATEST REVISION DATE

APPROVED BY BRIDGE ENGINEER

IOWA DOT Highway Division

STANDARD DESIGN

SINGLE REINFORCED CONCRETE BOX CULVERTS

APRIL, 2012

CULVERT BARREL DETAILS

5 x 5 BARREL SECTIONS

RCB 5-5-12

ENGLISHLRFDSIGNEDSINGLECULVERTS.DGN - RCB 5-5-12 - THIS SHEET ISSUED 04-12.

VARIABLE DIMENSIONS AND QUANTITIES FOR 5 x 6 BARREL SECTIONS

DIMENSIONS							BAR LIST																																				QUANTITIES				
							a1			b1			e1			e2			f1			f2			k1			k2					k9		m1			m2					m9		CONCRETE (CY/FT)				STEEL
FILL	S	H	A	B	C	D	SIZE	SP.	L	SIZE	SP.	NO.	SIZE	SP.	NO.	SIZE	SP.	NO.	SIZE	SP.	NO.	SIZE	SP.	NO.	SIZE	SP.	L	SIZE	SP.	L	H	V	SIZE	L	SIZE	SP.	L	SIZE	SP.	L	H	V	SIZE	L	SLAB	FLOOR	WALLS	TOTAL	(LB/FT)
0	5	6	10	10	9	9	4	9	7'-7	4	6	24	5	12	4	4	11	6	4	12	6	4	11	6	6	9	6'-2	5	12	7'-0	4'-0	3'-0	--	--	6	9	6'-8	5	12	10'-3	4'-0	6'-3	--	--	0.233	0.253	0.313	0.799	111.29
1	5	6	8.5	10	9	9	4	9	7'-5	4	6	24	5	12	4	4	11	6	4	12	6	4	11	6	6	9	6'-2	5	12	6'-11	4'-0	2'-11	--	--	6	9	6'-8	5	12	10'-3	4'-0	6'-3	--	--	0.203	0.253	0.313	0.769	110.79
2	5	6	8	10	9	9	4	9	7'-5	4	6	24	4	12	4	4	11	6	4	12	6	4	11	6	5	9	6'-2	5	12	6'-10	4'-0	2'-10	--	--	6	9	6'-8	5	12	10'-3	4'-0	6'-3	--	--	0.193	0.253	0.313	0.759	105.16
3-4	5	6	8	10	9	9	4	9	7'-5	4	6	24	4	12	4	4	11	6	4	12	6	4	11	6	4	6	6'-2	5	12	6'-10	4'-0	2'-10	--	--	4	6	6'-8	5	12	10'-3	4'-0	6'-3	--	--	0.193	0.253	0.313	0.759	99.58
5-7	5	6	8	10	9	9	4	9	7'-5	4	6	24	4	12	4	4	11	6	4	12	6	4	11	6	5	12	6'-2	5	12	6'-6	3'-8	2'-10	--	--	4	6	6'-8	5	12	9'-4	3'-1	6'-3	--	--	0.193	0.253	0.313	0.759	95.37
8-10	5	6	8	10	9	9	4	9	7'-5	4	6	24	4	12	4	4	13	6	4	12	6	4	12	6	5	12	6'-2	5	12	5'-8	2'-10	2'-10	5	6'-2	4	6	6'-8	5	12	8'-11	2'-8	6'-3	5	6'-8	0.193	0.253	0.313	0.759	93.29
11-15	5	6	8	10	9	9	4	9	7'-5	4	6	24	4	12	4	4	10	6	4	12	6	4	10	6	5	9	6'-2	5	12	5'-2	2'-4	2'-10	5	6'-2	6	9	6'-8	5	12	8'-7	2'-4	6'-3	5	6'-8	0.193	0.253	0.313	0.759	98.37
16-20	5	6	8	10	9	9	4	9	7'-5	4	6	24	4	12	4	4	10	6	4	12	6	4	10	6	6	9	6'-2	5	12	5'-1	2'-3	2'-10	5	6'-2	6	9	6'-8	5	12	8'-6	2'-3	6'-3	5	6'-8	0.193	0.253	0.313	0.759	101.95
21-25	5	6	8	10	9	9	4	12	7'-5	4	6	24	4	12	4	4	18	4	4	12	6	4	9	6	6	9	6'-2	4	6	4'-11	2'-1	2'-10	4	6'-2	5	6	6'-8	4	6	8'-5	2'-2	6'-3	4	6'-8	0.193	0.253	0.313	0.759	102.87
26-30	5	6	8	10	9	9	4	9	7'-5	4	6	24	4	12	4	4	18	4	4	12	6	4	9	6	5	6	6'-2	4	6	4'-11	2'-1	2'-10	4	6'-2	7	9	6'-8	4	6	8'-5	2'-2	6'-3	4	6'-8	0.193	0.253	0.313	0.759	111.03
31-35	5	6	8	10.5	9	9	4	9	7'-5	4	6	24	4	12	4	4	18	4	4	12	6	4	9	6	7	9	6'-2	4	6	4'-11	2'-1	2'-10	4	6'-2	6	6	6'-8	4	6	8'-6	2'-2	6'-4	4	6'-8	0.193	0.263	0.313	0.769	117.08
36-40	5	6	8.5	11	9.5	9	4	9	7'-6	4	6	24	4	12	4	4	10	6	4	12	6	4	10	6	7	9	6'-3	6	12	5'-7	2'-4	3'-3	6	6'-3	6	6	6'-9	6	12	8'-9	2'-5	6'-4	6	6'-9	0.206	0.278	0.330	0.814	129.79
41-45	5	6	9	11.5	10	9	5	12	7'-7	4	6	24	4	12	4	4	10	6	4	12	6	4	10	6	6	6	6'-4	6	12	5'-7	2'-4	3'-3	6	6'-4	6	6	6'-10	6	12	8'-10	2'-5	6'-5	6	6'-10	0.220	0.293	0.347	0.860	134.55
46-50	5	6	9.5	12	11	9	4	12	7'-8	4	6	24	4	12	4	4	10	6	4	12	6	4	10	6	6	6	6'-6	6	9	5'-9	2'-5	3'-4	6	6'-6	6	6	7'-0	6	9	8'-10	2'-5	6'-5	6	7'-0	0.238	0.311	0.383	0.932	144.24
51-55	5	6	10.5	12.5	11.5	9	4	12	7'-10	4	6	24	4	12	4	4	9	6	4	12	6	4	9	6	6	6	6'-7	5	6	5'-4	2'-4	3'-0	5	6'-7	6	6	7'-1	5	6	8'-11	2'-5	6'-6	5	7'-1	0.263	0.326	0.400	0.989	143.79

BENT BAR DETAIL

BARS	D
4	3
5	$3\frac{3}{4}$
6	$4\frac{1}{2}$

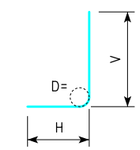

k2 & m2

NOTE:
ALL DIMENSIONS ARE OUT TO OUT.
D = PIN DIAMETER.

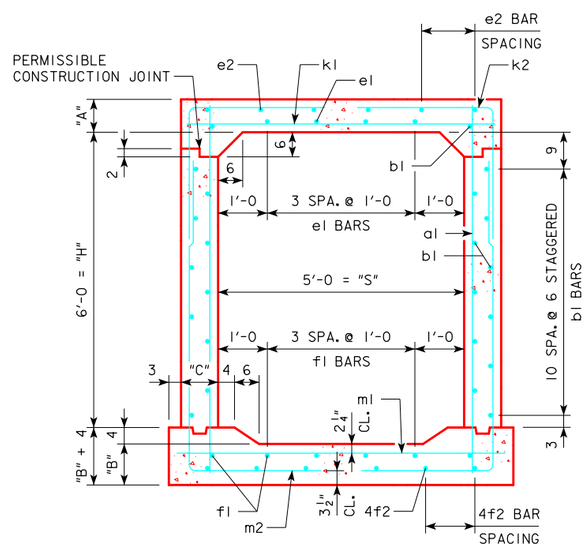

5 x 6 BARREL SECTION

NOTES:

1. DIMENSIONS LISTED ON THIS SHEET TO BE USED IN CONJUNCTION WITH SHEET RCB G2-12.
2. THE k2 AND m2 BARS HORIZONTAL LEGS MAY LAP IN LOW FILL SITUATIONS.
3. DIMENSIONS "A", "B", "C", "D", AND "SP." LISTED IN THE BAR LIST ARE IN INCHES.

LATEST REVISION DATE

APPROVED BY BRIDGE ENGINEER

IOWA DOT Highway Division

STANDARD DESIGN

SINGLE REINFORCED CONCRETE BOX CULVERTS

APRIL, 2012

CULVERT BARREL DETAILS

5 x 6 BARREL SECTIONS

RCB 5-6-12

ENGLISHLRFDSIGNEDSINGLECULVERTS.DGN - RCB 5-6-12 - THIS SHEET ISSUED 04-12.

VARIABLE DIMENSIONS AND QUANTITIES FOR 6 x 3 BARREL SECTIONS

DIMENSIONS							BAR LIST																																				QUANTITIES				
							a1			b1			e1			e2			f1			f2			k1			k2					k9		m1			m2					m9		CONCRETE (CY/FT)				STEEL
FILL	S	H	A	B	C	D	SIZE	SP.	L	SIZE	SP.	NO.	SIZE	SP.	NO.	SIZE	SP.	NO.	SIZE	SP.	NO.	SIZE	SP.	NO.	SIZE	SP.	L	SIZE	SP.	L	H	V	SIZE	L	SIZE	SP.	L	SIZE	SP.	L	H	V	SIZE	L	SLAB	FLOOR	WALLS	TOTAL	(LB/FT)
0	6	3	10.5	10	9	9	4	12	4'-7	4	6	12	5	12	5	4	10	6	4	12	7	4	12	6	6	9	7'-2	4	6	5'-5	2'-4	3'-1	4	7'-2	6	9	7'-8	4	6	5'-11	2'-8	3'-3	4	7'-8	0.275	0.284	0.146	0.705	94.26
1	6	3	9	10	9	9	4	12	4'-6	4	6	12	4	12	5	4	10	6	4	12	7	4	11	6	6	12	7'-2	4	6	5'-2	2'-3	2'-11	4	7'-2	6	9	7'-8	4	6	5'-9	2'-6	3'-3	4	7'-8	0.241	0.284	0.146	0.671	87.76
2	6	3	8	10	9	9	4	12	4'-5	4	6	12	4	12	5	4	18	4	4	12	7	4	10	6	5	9	7'-2	4	6	4'-11	2'-1	2'-10	4	7'-2	6	9	7'-8	4	6	5'-6	2'-3	3'-3	4	7'-8	0.218	0.284	0.146	0.648	83.79
3	6	3	8	10	9	9	4	9	4'-5	4	6	12	4	12	5	4	9	6	4	12	7	4	9	6	5	9	7'-2	5	12	5'-0	2'-2	2'-10	5	7'-2	6	9	7'-8	5	12	5'-5	2'-2	3'-3	5	7'-8	0.218	0.284	0.146	0.648	82.50
4-6	6	3	8	10	9	9	4	9	4'-5	4	6	12	4	12	5	4	9	6	4	12	7	4	9	6	4	6	7'-2	5	12	5'-0	2'-2	2'-10	5	7'-2	4	6	7'-8	5	12	5'-5	2'-2	3'-3	5	7'-8	0.218	0.284	0.146	0.648	76.11
7-10	6	3	8	10	9	9	4	9	4'-5	4	6	12	4	12	5	4	18	4	4	12	7	4	18	4	4	6	7'-2	5	12	4'-11	2'-1	2'-10	5	7'-2	4	6	7'-8	5	12	5'-4	2'-1	3'-3	5	7'-8	0.218	0.284	0.146	0.648	73.11
11-15	6	3	8	10	9	9	4	9	4'-5	4	6	12	4	12	5	4	17	4	4	12	7	4	17	4	6	9	7'-2	5	12	4'-10	2'-0	2'-10	5	7'-2	6	9	7'-8	5	12	5'-3	2'-0	3'-3	5	7'-8	0.218	0.284	0.146	0.648	83.71
16-20	6	3	8	10	9	9	4	9	4'-5	4	6	12	4	12	5	4	15	4	4	12	7	4	16	4	5	6	7'-2	4	6	4'-8	1'-10	2'-10	4	7'-2	5	6	7'-8	4	6	5'-2	1'-11	3'-3	4	7'-8	0.218	0.284	0.146	0.648	87.66
21-25	6	3	8	10	9	6	4	6	4'-5	4	6	12	4	12	5	4	15	4	4	12	7	4	16	4	7	9	7'-2	4	6	4'-8	1'-10	2'-10	4	7'-2	6	6	7'-8	4	6	5'-2	1'-11	3'-3	4	7'-8	0.218	0.284	0.146	0.648	103.92
26-30	6	3	8.5	11	9	6	4	6	4'-6	4	6	12	4	12	5	4	18	4	4	12	7	4	17	4	6	6	7'-2	6	12	5'-4	2'-1	3'-3	6	7'-2	6	6	7'-8	6	12	5'-4	2'-0	3'-4	6	7'-8	0.229	0.308	0.146	0.683	114.16
31-35	6	3	9.5	12	9	6	4	6	4'-8	4	6	12	4	12	5	4	17	4	4	12	7	4	15	4	6	6	7'-2	6	12	5'-4	2'-0	3'-4	6	7'-2	6	6	7'-8	6	12	5'-3	1'-10	3'-5	6	7'-8	0.252	0.333	0.146	0.731	114.34
36-40	6	3	10.5	12.5	9	6	4	6	4'-10	4	6	12	4	12	5	4	14	4	4	12	7	4	15	4	6	6	7'-2	4	6	4'-9	1'-9	3'-0	4	7'-2	6	6	7'-8	4	6	5'-4	1'-10	3'-6	4	7'-8	0.275	0.345	0.146	0.766	107.13
41-45	6	3	11	13	9	6	4	6	4'-11	4	6	12	4	12	5	4	14	4	4	12	7	4	15	4	8	9	7'-2	4	6	4'-10	1'-9	3'-1	4	7'-2	7	6	7'-8	4	6	5'-4	1'-10	3'-6	4	7'-8	0.287	0.358	0.146	0.791	120.84
46-50	6	3	11.5	14	9	6	4	6	5'-0	4	6	12	4	12	5	4	15	4	4	12	7	4	15	4	7	6	7'-2	6	12	5'-4	1'-10	3'-6	6	7'-2	7	6	7'-8	6	12	5'-5	1'-10	3'-7	6	7'-8	0.299	0.382	0.146	0.827	132.05
51-55	6	3	12	14.5	9	6	4	6	5'-1	4	6	12	4	12	5	4	15	4	4	12	7	4	15	4	7	6	7'-2	6	12	5'-4	1'-10	3'-6	6	7'-2	7	6	7'-8	6	12	5'-6	1'-10	3'-8	6	7'-8	0.310	0.395	0.146	0.851	132.53

BENT BAR DETAIL

BARS	D
4	3
5	$3\frac{3}{4}$
6	$4\frac{1}{2}$

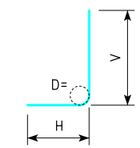

k2 & m2

NOTE:
ALL DIMENSIONS ARE OUT TO OUT.
D = PIN DIAMETER.

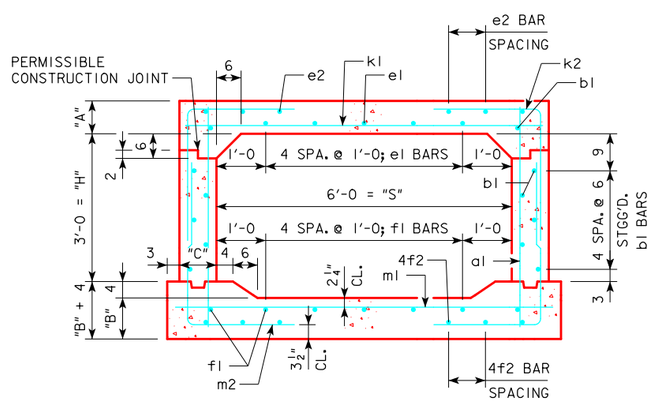

6 x 3 BARREL SECTION

NOTES:

1. DIMENSIONS LISTED ON THIS SHEET TO BE USED IN CONJUNCTION WITH SHEET RCB G2-12.
2. THE k2 AND m2 BARS HORIZONTAL LEGS MAY LAP IN LOW FILL SITUATIONS.
3. DIMENSIONS "A", "B", "C", "D", AND "SP." LISTED IN THE BAR LIST ARE IN INCHES.

LATEST REVISION DATE

APPROVED BY BRIDGE ENGINEER

IOWA DOT Highway Division

STANDARD DESIGN

SINGLE REINFORCED CONCRETE BOX CULVERTS

APRIL, 2012

CULVERT BARREL DETAILS

6 x 3 BARREL SECTIONS

RCB 6-3-12

ENGLISHLRFDSIGNEDSINGLECULVERTS.DGN - RCB 6-3-12 - THIS SHEET ISSUED 04-12.

VARIABLE DIMENSIONS AND QUANTITIES FOR 6 x 4 BARREL SECTIONS

DIMENSIONS							BAR LIST																																				QUANTITIES				
							a1			b1			e1			e2			f1			f2			k1			k2					k9		m1			m2					m9		CONCRETE (CY/FT)				STEEL
FILL	S	H	A	B	C	D	SIZE	SP.	L	SIZE	SP.	NO.	SIZE	SP.	NO.	SIZE	SP.	NO.	SIZE	SP.	NO.	SIZE	SP.	NO.	SIZE	SP.	L	SIZE	SP.	L	H	V	SIZE	L	SIZE	SP.	L	SIZE	SP.	L	H	V	SIZE	L	SLAB	FLOOR	WALLS	TOTAL	(LB/FT)
0	6	4	10.5	10	9	9	4	12	5'-7	4	6	16	5	12	5	4	16	6	4	12	7	4	13	6	6	9	7'-2	4	6	6'-6	3'-3	3'-3	4	7'-2	6	9	7'-8	4	6	7'-0	2'-9	4'-3	4	7'-8	0.275	0.284	0.202	0.761	104.16
1	6	4	9	10	9	9	4	9	5'-6	4	6	16	5	12	5	4	14	6	4	12	7	4	13	6	6	9	7'-2	5	12	6'-0	3'-0	3'-0	5	7'-2	6	9	7'-8	5	12	7'-0	2'-9	4'-3	5	7'-8	0.241	0.284	0.202	0.727	99.37
2	6	4	8	10	9	9	4	9	5'-5	4	6	16	4	12	5	4	11	6	4	12	7	4	11	6	5	9	7'-2	5	12	5'-4	2'-6	2'-10	5	7'-2	6	9	7'-8	5	12	6'-8	2'-5	4'-3	5	7'-8	0.218	0.284	0.202	0.704	90.50
3	6	4	8	10	9	9	4	9	5'-5	4	6	16	4	12	5	4	10	6	4	12	7	4	10	6	5	9	7'-2	5	12	5'-1	2'-3	2'-10	5	7'-2	6	9	7'-8	5	12	6'-6	2'-3	4'-3	5	7'-8	0.218	0.284	0.202	0.704	89.58
4-6	6	4	8	10	9	9	4	9	5'-5	4	6	16	4	12	5	4	10	6	4	12	7	4	9	6	4	6	7'-2	5	12	5'-1	2'-3	2'-10	5	7'-2	5	9	7'-8	5	12	6'-5	2'-2	4'-3	5	7'-8	0.218	0.284	0.202	0.704	83.79
7-10	6	4	8	10	9	9	4	9	5'-5	4	6	16	4	12	5	4	18	4	4	12	7	4	18	4	4	6	7'-2	5	12	4'-11	2'-1	2'-10	5	7'-2	4	6	7'-8	5	12	6'-4	2'-1	4'-3	5	7'-8	0.218	0.284	0.202	0.704	79.82
11-15	6	4	8	10	9	9	4	9	5'-5	4	6	16	4	12	5	4	17	4	4	12	7	4	17	4	6	9	7'-2	5	12	4'-10	2'-0	2'-10	5	7'-2	6	9	7'-8	5	12	6'-3	2'-0	4'-3	5	7'-8	0.218	0.284	0.202	0.704	90.42
16-20	6	4	8	10	9	9	4	12	5'-5	4	6	16	4	12	5	4	16	4	4	12	7	4	16	4	5	6	7'-2	4	6	4'-9	1'-11	2'-10	4	7'-2	5	6	7'-8	4	6	6'-2	1'-11	4'-3	4	7'-8	0.218	0.284	0.202	0.704	92.74
21-25	6	4	8	10	9	9	5	12	5'-5	4	6	16	4	12	5	4	16	4	4	12	7	4	16	4	7	9	7'-2	4	6	4'-9	1'-11	2'-10	4	7'-2	6	6	7'-8	4	6	6'-2	1'-11	4'-3	4	7'-8	0.218	0.284	0.202	0.704	109.32
26-30	6	4	8.5	11	9	6	4	6	5'-6	4	6	16	4	12	5	4	15	4	4	12	7	4	15	4	6	6	7'-2	4	6	4'-9	1'-10	2'-11	4	7'-2	6	6	7'-8	4	6	6'-2	1'-10	4'-4	4	7'-8	0.229	0.308	0.202	0.739	113.79
31-35	6	4	9.5	12	9	6	4	6	5'-8	4	6	16	4	12	5	4	15	4	4	12	7	4	16	4	6	6	7'-2	4	6	4'-10	1'-10	3'-0	4	7'-2	6	6	7'-8	4	6	6'-4	1'-11	4'-5	4	7'-8	0.252	0.333	0.202	0.787	114.92
36-40	6	4	10.5	12.5	9	9	5	12	5'-10	4	6	16	4	12	5	4	15	4	4	12	7	4	16	4	8	9	7'-2	4	6	4'-10	1'-10	3'-0	4	7'-2	8	9	7'-8	4	6	6'-5	1'-11	4'-6	4	7'-8	0.275	0.345	0.202	0.822	122.58
41-45	6	4	11	13	9	6	4	6	5'-11	4	6	16	4	12	5	4	15	4	4	12	7	4	16	4	8	9	7'-2	4	6	4'-11	1'-10	3'-1	4	7'-2	7	6	7'-8	4	6	6'-5	1'-11	4'-6	4	7'-8	0.287	0.358	0.202	0.847	129.34
46-50	6	4	11.5	14	9	6	4	6	6'-0	4	6	16	4	12	5	4	16	4	4	12	7	4	16	4	7	6	7'-2	4	6	5'-1	1'-11	3'-2	4	7'-2	7	6	7'-8	4	6	6'-6	1'-11	4'-7	4	7'-8	0.299	0.382	0.202	0.883	133.24
51-55	6	4	12	14.5	9	6	4	6	6'-1	4	6	16	4	12	5	4	16	4	4	12	7	4	17	4	7	6	7'-2	4	6	5'-1	1'-11	3'-2	4	7'-2	7	6	7'-8	4	6	6'-8	2'-0	4'-8	4	7'-8	0.310	0.395	0.202	0.907	133.92

BENT BAR DETAIL

BARS	D
4	3
5	$3\frac{3}{4}$

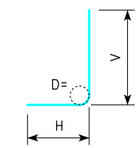

k2 & m2

NOTE:
ALL DIMENSIONS ARE OUT TO OUT.
D = PIN DIAMETER.

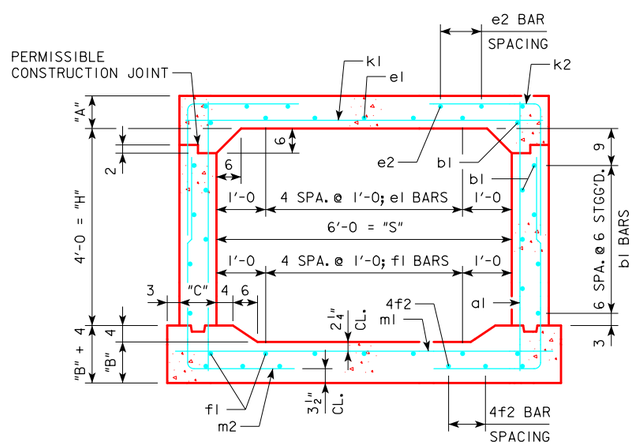

6 x 4 BARREL SECTION

NOTES:

1. DIMENSIONS LISTED ON THIS SHEET TO BE USED IN CONJUNCTION WITH SHEET RCB G2-12.
2. THE k2 AND m2 BARS HORIZONTAL LEGS MAY LAP IN LOW FILL SITUATIONS.
3. DIMENSIONS "A", "B", "C", "D", AND "SP." LISTED IN THE BAR LIST ARE IN INCHES.

LATEST REVISION DATE

APPROVED BY BRIDGE ENGINEER

IOWA DOT Highway Division

STANDARD DESIGN

SINGLE REINFORCED CONCRETE BOX CULVERTS

APRIL, 2012

CULVERT BARREL DETAILS

6 x 4 BARREL SECTIONS

RCB 6-4-12

ENGLISHLRFDSIGNEDSINGLECULVERTS.DGN - RCB 6-4-12 - THIS SHEET ISSUED 04-12.

VARIABLE DIMENSIONS AND QUANTITIES FOR 6 x 5 BARREL SECTIONS

DIMENSIONS							BAR LIST																																				QUANTITIES				
							a1			b1			e1			e2			f1			f2			k1			k2					k9		m1			m2					m9		CONCRETE (CY/FT)				STEEL
FILL	S	H	A	B	C	D	SIZE	SP.	L	SIZE	SP.	NO.	SIZE	SP.	NO.	SIZE	SP.	NO.	SIZE	SP.	NO.	SIZE	SP.	NO.	SIZE	SP.	L	SIZE	SP.	L	H	V	SIZE	L	SIZE	SP.	L	SIZE	SP.	L	H	V	SIZE	L	SLAB	FLOOR	WALLS	TOTAL	(LB/FT)
0	6	5	10.5	10	9	9	4	9	6'-7	4	6	20	5	12	5	4	14	6	4	12	7	4	14	6	6	9	7'-2	5	12	7'-7	4'-6	3'-1	--	--	6	9	7'-8	5	12	8'-2	2'-11	5'-3	5	7'-8	0.275	0.284	0.257	0.816	109.74
1	6	5	9	10	9	9	4	9	6'-6	4	6	20	5	12	5	4	14	6	4	12	7	4	15	6	6	9	7'-2	5	12	7'-5	4'-6	2'-11	--	--	6	9	7'-8	5	12	8'-4	3'-1	5'-3	5	7'-8	0.241	0.284	0.257	0.782	109.58
2	6	5	8	10	9	9	4	9	6'-5	4	6	20	5	12	5	4	15	6	4	12	7	4	13	6	6	9	7'-2	5	12	6'-2	3'-1	3'-1	5	7'-2	6	9	7'-8	5	12	8'-0	2'-9	5'-3	5	7'-8	0.218	0.284	0.257	0.759	106.24
3	6	5	8	10	9	9	4	9	6'-5	4	6	20	4	12	5	4	13	6	4	12	7	4	12	6	5	9	7'-2	5	12	5'-8	2'-10	2'-10	5	7'-2	6	9	7'-8	5	12	7'-10	2'-7	5'-3	5	7'-8	0.218	0.284	0.257	0.759	98.32
4-8	6	5	8	10	9	9	4	9	6'-5	4	6	20	4	12	5	4	11	6	4	12	7	4	11	6	5	9	7'-2	5	12	5'-4	2'-6	2'-10	5	7'-2	6	9	7'-8	5	12	7'-8	2'-5	5'-3	5	7'-8	0.218	0.284	0.257	0.759	97.18
9-10	6	5	8	10	9	9	4	9	6'-5	4	6	20	4	12	5	4	18	4	4	12	7	4	18	4	4	6	7'-2	5	12	4'-11	2'-1	2'-10	5	7'-2	5	9	7'-8	5	12	7'-4	2'-1	5'-3	5	7'-8	0.218	0.284	0.257	0.759	87.26
11-15	6	5	8	10	9	9	4	9	6'-5	4	6	20	4	12	5	4	18	4	4	12	7	4	18	4	6	9	7'-2	5	12	4'-11	2'-1	2'-10	5	7'-2	6	9	7'-8	5	12	7'-4	2'-1	5'-3	5	7'-8	0.218	0.284	0.257	0.759	97.47
16-20	6	5	8	10	9	9	4	12	6'-5	4	6	20	4	12	5	4	16	4	4	12	7	4	17	4	5	6	7'-2	4	6	4'-9	1'-11	2'-10	4	7'-2	5	6	7'-8	4	6	7'-3	2'-0	5'-3	4	7'-8	0.218	0.284	0.257	0.759	99.68
21-25	6	5	8	10	9	9	4	9	6'-5	4	6	20	4	12	5	4	16	4	4	12	7	4	17	4	6	6	7'-2	4	6	4'-9	1'-11	2'-10	4	7'-2	6	6	7'-8	4	6	7'-3	2'-0	5'-3	4	7'-8	0.218	0.284	0.257	0.759	116.18
26-30	6	5	8.5	11	9	9	5	12	6'-6	4	6	20	4	12	5	4	16	4	4	12	7	4	17	4	6	6	7'-2	4	6	4'-10	1'-11	2'-11	4	7'-2	6	6	7'-8	4	6	7'-4	2'-0	5'-4	4	7'-8	0.229	0.308	0.257	0.794	119.03
31-35	6	5	9.5	12	9	9	5	12	6'-8	4	6	20	4	12	5	4	16	4	4	12	7	4	17	4	6	6	7'-2	4	6	4'-11	1'-11	3'-0	4	7'-2	6	6	7'-8	4	6	7'-5	2'-0	5'-5	4	7'-8	0.252	0.333	0.257	0.842	119.84
36-40	6	5	10.5	12.5	9	6	4	6	6'-10	4	6	20	4	12	5	4	17	4	4	12	7	4	18	4	8	9	7'-2	4	6	5'-0	2'-0	3'-0	4	7'-2	8	9	7'-8	4	6	7'-7	2'-1	5'-6	4	7'-8	0.275	0.345	0.257	0.877	134.58
41-45	6	5	11	13	9	6	4	6	6'-11	4	6	20	4	12	5	4	17	4	4	12	7	4	18	4	8	9	7'-2	4	6	5'-1	2'-0	3'-1	4	7'-2	7	6	7'-8	4	6	7'-7	2'-1	5'-6	4	7'-8	0.287	0.358	0.257	0.902	138.24
46-50	6	5	11.5	14	9	9	5	12	7'-0	4	6	20	4	12	5	4	17	4	4	12	7	4	18	4	8	9	7'-2	6	12	5'-6	2'-0	3'-6	6	7'-2	7	6	7'-8	6	12	7'-8	2'-1	5'-7	6	7'-8	0.299	0.382	0.257	0.938	143.76
51-55	6	5	12.5	14.5	9.5	6	4	6	7'-2	4	6	20	4	12	5	4	9	6	4	12	7	4	9	6	7	6	7'-3	6	12	5'-8	2'-2	3'-6	6	7'-3	7	6	7'-9	6	12	7'-10	2'-2	5'-8	6	7'-9	0.326	0.399	0.271	0.996	155.37

BENT BAR DETAIL

BARS	D
4	3
5	$3\frac{3}{4}$
6	$4\frac{1}{2}$

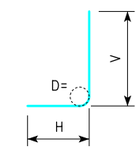

k2 & m2

NOTE:
ALL DIMENSIONS ARE OUT TO OUT.
D = PIN DIAMETER.

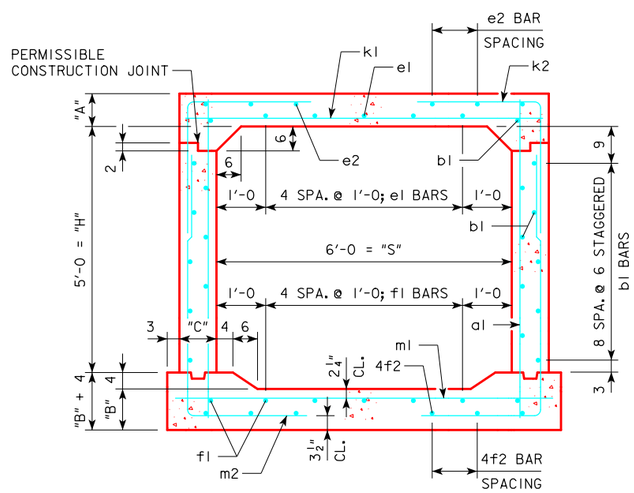

6 x 5 BARREL SECTION

NOTES:

1. DIMENSIONS LISTED ON THIS SHEET TO BE USED IN CONJUNCTION WITH SHEET RCB G2-12.
2. THE k2 AND m2 BARS HORIZONTAL LEGS MAY LAP IN LOW FILL SITUATIONS.
3. DIMENSIONS "A", "B", "C", "D", AND "SP." LISTED IN THE BAR LIST ARE IN INCHES.

LATEST REVISION DATE

APPROVED BY BRIDGE ENGINEER

IOWA DOT Highway Division

STANDARD DESIGN

SINGLE REINFORCED CONCRETE BOX CULVERTS

APRIL, 2012

CULVERT BARREL DETAILS

6 x 5 BARREL SECTIONS

RCB 6-5-12

ENGLISHLRFDSIGNEDSINGLECULVERTS.DGN - RCB 6-5-12 - THIS SHEET ISSUED 04-12.

VARIABLE DIMENSIONS AND QUANTITIES FOR 6 x 6 BARREL SECTIONS

DIMENSIONS							BAR LIST																																				QUANTITIES				
							a1			b1			e1			e2			f1			f2			k1			k2					k9		m1			m2					m9		CONCRETE (CY/FT)				STEEL
FILL	S	H	A	B	C	D	SIZE	SP.	L	SIZE	SP.	NO.	SIZE	SP.	NO.	SIZE	SP.	NO.	SIZE	SP.	NO.	SIZE	SP.	NO.	SIZE	SP.	L	SIZE	SP.	L	H	V	SIZE	L	SIZE	SP.	L	SIZE	SP.	L	H	V	SIZE	L	SLAB	FLOOR	WALLS	TOTAL	(LB/FT)
0	6	6	10.5	10	9	9	4	12	7'-7	4	6	24	5	12	5	4	14	6	4	12	7	4	14	6	6	9	7'-2	4	6	7'-7	4'-6	3'-1	--	--	6	9	7'-8	4	6	10'-1	3'-10	6'-3	--	--	0.275	0.284	0.313	0.872	122.92
1	6	6	9	10	9	9	4	9	7'-6	4	6	24	5	12	5	4	14	6	4	12	7	4	14	6	6	9	7'-2	5	12	7'-5	4'-6	2'-11	--	--	6	9	7'-8	5	12	10'-9	4'-6	6'-3	--	--	0.241	0.284	0.313	0.838	119.03
2	6	6	8	10	9	9	4	9	7'-5	4	6	24	5	12	5	4	14	6	4	12	7	4	17	6	6	9	7'-2	5	12	7'-4	4'-6	2'-10	--	--	6	9	7'-8	5	12	9'-9	3'-6	6'-3	5	7'-8	0.218	0.284	0.313	0.815	116.87
3	6	6	8	10	9	9	4	9	7'-5	4	6	24	4	12	5	4	17	6	4	12	7	4	15	6	5	9	7'-2	5	12	6'-4	3'-6	2'-10	5	7'-2	6	9	7'-8	5	12	9'-4	3'-1	6'-3	5	7'-8	0.218	0.284	0.313	0.815	107.63
4-7	6	6	8	10	9	9	4	9	7'-5	4	6	24	4	12	5	4	15	6	4	12	7	4	13	6	5	9	7'-2	5	12	6'-2	3'-1	3'-1	5	7'-2	6	9	7'-8	5	12	9'-1	2'-10	6'-3	5	7'-8	0.218	0.284	0.313	0.815	106.68
8-10	6	6	8	10	9	9	4	9	7'-5	4	6	24	4	12	5	4	11	6	4	12	7	4	11	6	4	6	7'-2	5	12	5'-4	2'-6	2'-10	5	7'-2	6	9	7'-8	5	12	8'-9	2'-6	6'-3	5	7'-8	0.218	0.284	0.313	0.815	103.34
11-15	6	6	8	10	9	9	4	12	7'-5	4	6	24	4	12	5	4	18	4	4	12	7	4	18	4	6	9	7'-2	4	6	4'-11	2'-1	2'-10	4	7'-2	6	9	7'-8	4	6	8'-4	2'-1	6'-3	4	7'-8	0.218	0.284	0.313	0.815	106.79
16-20	6	6	8	10	9	9	4	12	7'-5	4	6	24	4	12	5	4	18	4	4	12	7	4	18	4	5	6	7'-2	4	6	4'-11	2'-1	2'-10	4	7'-2	5	6	7'-8	4	6	8'-4	2'-1	6'-3	4	7'-8	0.218	0.284	0.313	0.815	107.08
21-25	6	6	8	10	9	9	5	12	7'-5	4	6	24	4	12	5	4	18	4	4	12	7	4	18	4	6	6	7'-2	4	6	4'-11	2'-1	2'-10	4	7'-2	6	6	7'-8	4	6	8'-4	2'-1	6'-3	4	7'-8	0.218	0.284	0.313	0.815	126.58
26-30	6	6	8.5	11	9	9	5	12	7'-6	4	6	24	4	12	5	4	10	6	4	12	7	4	10	6	6	6	7'-2	6	12	5'-6	2'-3	3'-3	6	7'-2	6	6	7'-8	6	12	8'-7	2'-3	6'-4	6	7'-8	0.229	0.308	0.313	0.850	139.82
31-35	6	6	9.5	12	9	9	4	12	7'-8	4	6	24	4	12	5	4	9	6	4	12	7	4	10	6	6	6	7'-2	5	6	5'-2	2'-2	3'-0	5	7'-2	6	6	7'-8	5	6	8'-8	2'-3	6'-5	5	7'-8	0.252	0.333	0.313	0.898	146.74
36-40	6	6	10.5	12.5	9.5	9	4	12	7'-10	4	6	24	4	12	5	4	9	6	4	12	7	4	10	6	8	9	7'-3	6	9	5'-7	2'-3	3'-4	6	7'-3	8	9	7'-9	6	9	8'-10	2'-4	6'-6	6	7'-9	0.279	0.349	0.330	0.958	159.97
41-45	6	6	11	13.5	10	9	4	12	7'-11	4	6	24	4	12	5	4	9	6	4	12	7	4	10	6	8	9	7'-4	5	6	5'-4	2'-3	3'-1	5	7'-4	8	9	7'-10	5	6	9'-0	2'-5	6'-7	5	7'-10	0.295	0.379	0.347	1.021	160.53
46-50	6	6	11.5	14	11	9	4	9	8'-0	4	6	24	4	12	5	4	10	6	4	12	7	4	10	6	8	9	7'-6	6	9	5'-11	2'-5	3'-6	6	7'-6	8	9	8'-0	6	9	9'-1	2'-6	6'-7	6	8'-0	0.316	0.399	0.383	1.098	167.92
51-55	6	6	12	14.5	11.5	9	4	9	8'-1	4	6	24	4	12	5	4	9	6	4	12	7	4	10	6	8	9	7'-7	5	6	5'-7	2'-5	3'-2	5	7'-7	8	9	8'-1	5	6	9'-2	2'-6	6'-8	5	8'-1	0.332	0.417	0.400	1.149	167.84

BENT BAR DETAIL

BARS	D
4	3
5	$3\frac{3}{4}$
6	$4\frac{1}{2}$

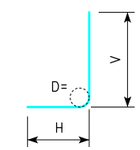

k2 & m2

NOTE:
ALL DIMENSIONS ARE OUT TO OUT.
D = PIN DIAMETER.

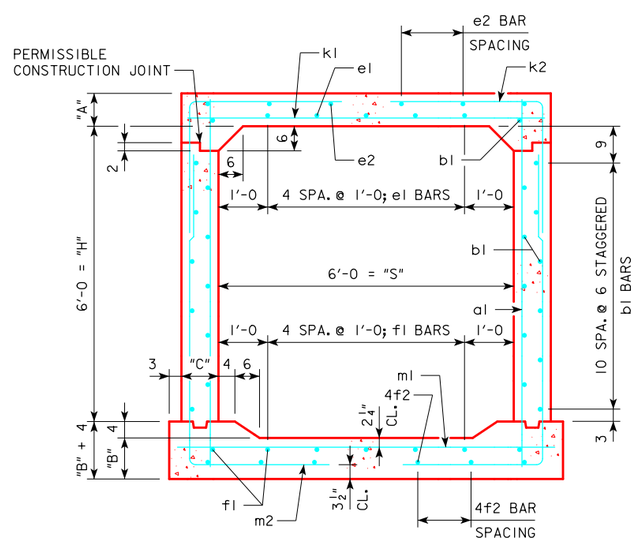

6 x 6 BARREL SECTION

NOTES:

1. DIMENSIONS LISTED ON THIS SHEET TO BE USED IN CONJUNCTION WITH SHEET RCB G2-12.
2. THE k2 AND m2 BARS HORIZONTAL LEGS MAY LAP IN LOW FILL SITUATIONS.
3. DIMENSIONS "A", "B", "C", "D", AND "SP." LISTED IN THE BAR LIST ARE IN INCHES.

LATEST REVISION DATE

APPROVED BY BRIDGE ENGINEER

IOWA DOT Highway Division

STANDARD DESIGN

SINGLE REINFORCED CONCRETE BOX CULVERTS

APRIL, 2012

CULVERT BARREL DETAILS

6 x 6 BARREL SECTIONS

RCB 6-6-12

ENGLISHLRFDSIGNEDSINGLECULVERTS.DGN - RCB 6-6-12 - THIS SHEET ISSUED 04-12.

VARIABLE DIMENSIONS AND QUANTITIES FOR 6 x 7 BARREL SECTIONS

DIMENSIONS							BAR LIST																																				QUANTITIES				
							a1			b1			e1			e2			f1			f2			k1			k2					k9		m1			m2					m9		CONCRETE (CY/FT)				STEEL
FILL	S	H	A	B	C	D	SIZE	SP.	L	SIZE	SP.	NO.	SIZE	SP.	NO.	SIZE	SP.	NO.	SIZE	SP.	NO.	SIZE	SP.	NO.	SIZE	SP.	L	SIZE	SP.	L	H	V	SIZE	L	SIZE	SP.	L	SIZE	SP.	L	H	V	SIZE	L	SLAB	FLOOR	WALLS	TOTAL	(LB/FT)
0	6	7	10.5	10	9	9	4	12	8'-7	4	6	28	5	12	5	4	14	6	4	12	7	4	14	6	6	9	7'-2	4	6	7'-7	4'-6	3'-1	--	--	6	9	7'-8	4	6	11'-9	4'-6	7'-3	--	--	0.275	0.284	0.368	0.927	131.47
1	6	7	9	10	9	9	4	9	8'-6	4	6	28	5	12	5	4	14	6	4	12	7	4	14	6	6	9	7'-2	5	12	7'-5	4'-6	2'-11	--	--	6	9	7'-8	5	12	11'-9	4'-6	7'-3	--	--	0.241	0.284	0.368	0.893	125.74
2	6	7	8	10	9	9	4	9	8'-5	4	6	28	5	12	5	4	14	6	4	12	7	4	14	6	6	9	7'-2	5	12	7'-4	4'-6	2'-10	--	--	6	9	7'-8	5	12	11'-9	4'-6	7'-3	--	--	0.218	0.284	0.368	0.870	125.39
3	6	7	8	10	9	9	4	9	8'-5	4	6	28	4	12	5	4	14	6	4	12	7	4	14	6	5	9	7'-2	5	12	7'-4	4'-6	2'-10	--	--	6	9	7'-8	5	12	11'-9	4'-6	7'-3	--	--	0.218	0.284	0.368	0.870	118.95
4-7	6	7	8	10	9	9	4	9	8'-5	4	6	28	4	12	5	4	14	6	4	12	7	4	14	6	5	9	7'-2	5	12	7'-4	4'-6	2'-10	--	--	6	9	7'-8	5	12	11'-2	3'-11	7'-3	--	--	0.218	0.284	0.368	0.870	117.63
8-10	6	7	8	10	9	9	4	9	8'-5	4	6	28	4	12	5	4	14	6	4	12	7	4	14	6	4	6	7'-2	5	12	5'-10	2'-11	2'-11	5	7'-2	6	9	7'-8	5	12	10'-2	2'-11	7'-3	5	7'-8	0.218	0.284	0.368	0.870	112.13
11-15	6	7	8	10	9	9	4	12	8'-5	4	6	28	4	12	5	4	11	6	4	12	7	4	11	6	6	9	7'-2	4	6	5'-3	2'-5	2'-10	4	7'-2	6	9	7'-8	4	6	9'-8	2'-5	7'-3	4	7'-8	0.218	0.284	0.368	0.870	117.97
16-20	6	7	8	10	9	9	4	9	8'-5	4	6	28	4	12	5	4	10	6	4	12	7	4	10	6	5	6	7'-2	4	6	5'-2	2'-4	2'-10	4	7'-2	5	6	7'-8	4	6	9'-7	2'-4	7'-3	4	7'-8	0.218	0.284	0.368	0.870	121.37
21-25	6	7	8	10	9	9	4	12	8'-5	4	6	28	4	12	5	4	11	6	4	12	7	4	12	6	6	6	7'-2	6	9	5'-8	2'-6	3'-2	6	7'-2	6	6	7'-8	6	9	9'-10	2'-7	7'-3	6	7'-8	0.218	0.284	0.368	0.870	157.29
26-30	6	7	8.5	11	9	9	4	12	8'-6	4	6	28	4	12	5	4	11	6	4	12	7	4	11	6	6	6	7'-2	5	6	5'-4	2'-5	2'-11	5	7'-2	6	6	7'-8	5	6	9'-10	2'-6	7'-4	5	7'-8	0.229	0.308	0.368	0.905	156.18
31-35	6	7	9.5	12	10	9	4	12	8'-8	4	6	28	4	12	5	4	10	6	4	12	7	4	11	6	6	6	7'-4	5	6	5'-5	2'-5	3'-0	5	7'-4	6	6	7'-10	5	6	10'-0	2'-7	7'-5	5	7'-10	0.260	0.341	0.409	1.010	158.47
36-40	6	7	10	12.5	11	9	4	12	8'-9	4	6	28	4	12	5	4	11	6	4	12	7	4	11	6	6	6	7'-6	6	9	5'-11	2'-7	3'-4	6	7'-6	6	6	8'-0	6	9	10'-2	2'-8	7'-6	6	8'-0	0.279	0.361	0.451	1.091	162.24
41-45	6	7	11	13.5	11.5	9	4	12	8'-11	4	6	28	4	12	5	4	10	6	4	12	7	4	11	6	8	9	7'-7	5	6	5'-8	2'-7	3'-1	5	7'-7	8	9	8'-1	5	6	10'-4	2'-9	7'-7	5	8'-1	0.308	0.391	0.471	1.170	173.53
46-50	6	7	11.5	14	12.5	9	4	9	9'-0	4	6	28	4	12	5	4	10	6	4	12	7	4	11	6	8	9	7'-9	5	6	5'-10	2'-8	3'-2	5	7'-9	8	9	8'-3	5	6	10'-5	2'-10	7'-7	5	8'-3	0.328	0.413	0.512	1.253	179.71
51-55	6	7	12	14.5	13	9	4	9	9'-1	4	6	28	4	12	5	4	11	6	4	12	7	4	11	6	8	9	7'-10	5	6	5'-11	2'-9	3'-2	5	7'-10	8	9	8'-4	5	6	10'-6	2'-10	7'-8	5	8'-4	0.345	0.431	0.532	1.308	181.18

BENT BAR DETAIL

BARS	D
4	3
5	$3\frac{3}{4}$
6	$4\frac{1}{2}$

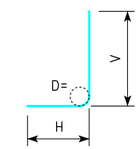

k2 & m2

NOTE:
ALL DIMENSIONS ARE OUT TO OUT.
D = PIN DIAMETER.

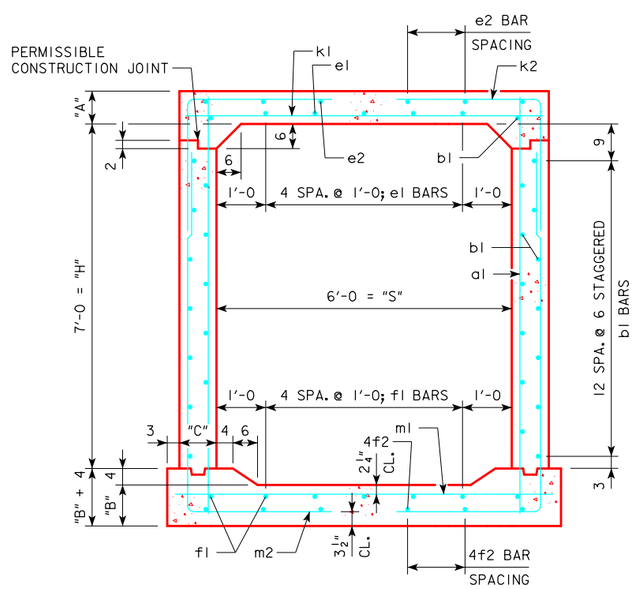

6 x 7 BARREL SECTION

NOTES:

1. DIMENSIONS LISTED ON THIS SHEET TO BE USED IN CONJUNCTION WITH SHEET RCB G2-12.
2. THE k2 AND m2 BARS HORIZONTAL LEGS MAY LAP IN LOW FILL SITUATIONS.
3. DIMENSIONS "A", "B", "C", "D", AND "SP." LISTED IN THE BAR LIST ARE IN INCHES.

LATEST REVISION DATE

APPROVED BY BRIDGE ENGINEER

IOWA DOT Highway Division

STANDARD DESIGN

SINGLE REINFORCED CONCRETE BOX CULVERTS

APRIL, 2012

CULVERT BARREL DETAILS

6 x 7 BARREL SECTIONS

RCB 6-7-12

ENGLISHLRFDSIGNEDSINGLECULVERTS.DGN - RCB 6-7-12 - THIS SHEET ISSUED 04-12.

VARIABLE DIMENSIONS AND QUANTITIES FOR 6 x 8 BARREL SECTIONS

DIMENSIONS							BAR LIST																																				QUANTITIES				
							a1			b1			e1			e2			f1			f2			k1			k2					k9		m1			m2					m9		CONCRETE (CY/FT)				STEEL
FILL	S	H	A	B	C	D	SIZE	SP.	L	SIZE	SP.	NO.	SIZE	SP.	NO.	SIZE	SP.	NO.	SIZE	SP.	NO.	SIZE	SP.	NO.	SIZE	SP.	L	SIZE	SP.	L	H	V	SIZE	L	SIZE	SP.	L	SIZE	SP.	L	H	V	SIZE	L	SLAB	FLOOR	WALLS	TOTAL	(LB/FT)
0	6	8	10.5	10	9	9	4	12	9'-7	4	6	32	5	12	5	4	14	6	4	12	7	4	14	6	6	9	7'-2	4	6	7'-7	4'-6	3'-1	--	--	6	9	7'-8	4	6	12'-9	4'-6	8'-3	--	--	0.275	0.284	0.424	0.983	138.18
1	6	8	9	10	9	9	4	12	9'-6	4	6	32	5	12	5	4	14	6	4	12	7	4	14	6	6	9	7'-2	4	6	7'-5	4'-6	2'-11	--	--	6	9	7'-8	4	6	12'-9	4'-6	8'-3	--	--	0.241	0.284	0.424	0.949	137.63
2	6	8	8	10	9	9	4	12	9'-5	4	6	32	5	12	5	4	14	6	4	12	7	4	14	6	6	9	7'-2	4	6	7'-4	4'-6	2'-10	--	--	5	6	7'-8	4	6	12'-9	4'-6	8'-3	--	--	0.218	0.284	0.424	0.926	137.45
3	6	8	8	10	9	9	4	12	9'-5	4	6	32	4	12	5	4	14	6	4	12	7	4	14	6	6	9	7'-2	4	6	7'-4	4'-6	2'-10	--	--	6	9	7'-8	4	6	12'-9	4'-6	8'-3	--	--	0.218	0.284	0.424	0.926	135.45
4-8	6	8	8	10	9	9	4	12	9'-5	4	6	32	4	12	5	4	14	6	4	12	7	4	14	6	5	9	7'-2	4	6	7'-4	4'-6	2'-10	--	--	6	9	7'-8	4	6	12'-9	4'-6	8'-3	--	--	0.218	0.284	0.424	0.926	130.84
9-10	6	8	8	10	9	9	4	12	9'-5	4	6	32	4	12	5	4	14	6	4	12	7	4	14	6	4	6	7'-2	4	6	5'-10	2'-11	2'-11	4	7'-2	6	9	7'-8	4	6	11'-2	2'-11	8'-3	4	7'-8	0.218	0.284	0.424	0.926	122.32
11-15	6	8	8	10	9	9	4	9	9'-5	4	6	32	4	12	5	4	13	6	4	12	7	4	13	6	6	9	7'-2	4	6	5'-8	2'-10	2'-10	4	7'-2	5	6	7'-8	4	6	11'-1	2'-10	8'-3	4	7'-8	0.218	0.284	0.424	0.926	131.08
16-20	6	8	8	10	9	9	5	12	9'-5	4	6	32	4	12	5	4	13	6	4	12	7	4	13	6	5	6	7'-2	5	9	5'-8	2'-10	2'-10	5	7'-2	5	6	7'-8	5	9	11'-1	2'-10	8'-3	5	7'-8	0.218	0.284	0.424	0.926	138.13
21-25	6	8	8	10	9.5	9	4	9	9'-5	4	6	32	4	12	5	4	13	6	4	12	7	4	13	6	7	9	7'-3	6	9	6'-0	2'-10	3'-2	6	7'-3	6	6	7'-9	6	9	11'-2	2'-11	8'-3	6	7'-9	0.221	0.287	0.447	0.955	171.32
26-30	6	8	8.5	11	10.5	9	4	9	9'-6	4	6	32	4	12	5	4	12	6	4	12	7	4	13	6	7	9	7'-5	6	9	6'-1	2'-10	3'-3	6	7'-5	6	6	7'-11	6	9	11'-3	2'-11	8'-4	6	7'-11	0.240	0.318	0.496	1.054	173.18
31-35	6	8	9.5	12	11.5	9	5	12	9'-8	4	6	32	4	12	5	4	13	6	4	12	7	4	12	6	7	9	7'-7	5	6	6'-0	3'-0	3'-0	5	7'-7	6	6	8'-1	5	6	11'-4	2'-11	8'-5	5	8'-1	0.271	0.352	0.542	1.165	178.13
36-40	6	8	10	12.5	12.5	9	5	12	9'-9	4	6	32	4	12	5	4	12	6	4	12	7	4	12	6	6	6	7'-9	5	6	6'-0	3'-0	3'-0	5	7'-9	6	6	8'-3	5	6	11'-5	2'-11	8'-6	5	8'-3	0.291	0.373	0.589	1.253	181.13
41-45	6	8	11	13.5	13	6	4	6	9'-11	4	6	32	4	12	5	4	13	6	4	12	7	4	13	6	6	6	7'-10	5	6	6'-2	3'-1	3'-1	5	7'-10	6	6	8'-4	5	6	11'-8	3'-1	8'-7	5	8'-4	0.320	0.404	0.613	1.337	189.05
46-50	6	8	11.5	14	14	6	4	6	10'-0	4	6	32	4	12	5	4	12	6	4	12	7	4	12	6	8	9	8'-0	6	9	6'-6	3'-0	3'-6	6	8'-0	8	9	8'-6	6	9	11'-8	3'-1	8'-7	6	8'-6	0.341	0.427	0.659	1.427	202.66
51-55	6	8	12	15	14.5	6	4	6	10'-2	4	6	32	4	12	5	4	12	6	4	12	7	4	13	6	8	9	8'-1	6	9	6'-7	3'-1	3'-6	6	8'-1	8	9	8'-7	6	9	11'-11	3'-3	8'-8	6	8'-7	0.358	0.459	0.683	1.500	205.13

BENT BAR DETAIL

BARS	D
4	3
5	$3\frac{3}{4}$
6	$4\frac{1}{2}$

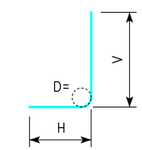

k2 & m2

NOTE:
ALL DIMENSIONS ARE OUT TO OUT.
D = PIN DIAMETER.

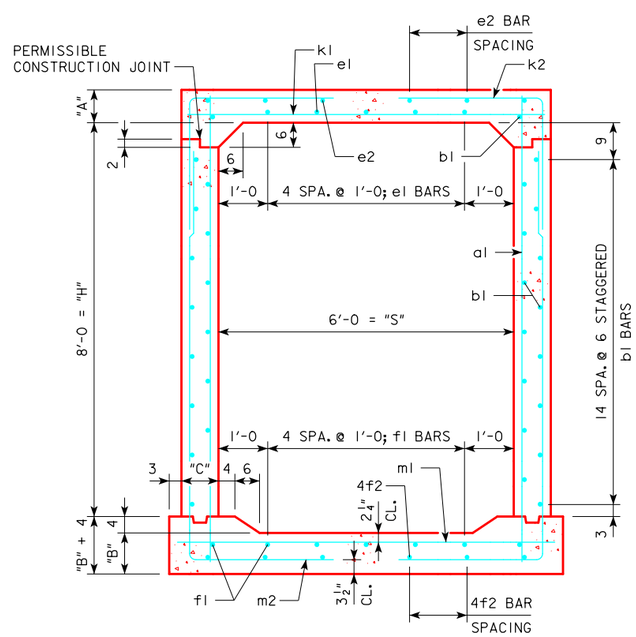

6 x 8 BARREL SECTION

NOTES:

1. DIMENSIONS LISTED ON THIS SHEET TO BE USED IN CONJUNCTION WITH SHEET RCB G2-12.
2. THE k2 AND m2 BARS HORIZONTAL LEGS MAY LAP IN LOW FILL SITUATIONS.
3. DIMENSIONS "A", "B", "C", "D", AND "SP." LISTED IN THE BAR LIST ARE IN INCHES.

LATEST REVISION DATE

APPROVED BY BRIDGE ENGINEER

IOWA DOT Highway Division

STANDARD DESIGN

SINGLE REINFORCED CONCRETE BOX CULVERTS

APRIL, 2012

CULVERT BARREL DETAILS

6 x 8 BARREL SECTIONS

RCB 6-8-12

ENGLISHLRFDSIGNEDSINGLECULVERTS.DGN - RCB 6-8-12 - THIS SHEET ISSUED 04-12.

VARIABLE DIMENSIONS AND QUANTITIES FOR 8 x 4 BARREL SECTIONS

DIMENSIONS							BAR LIST																																				QUANTITIES				
							a1			b1			e1			e2			f1			f2			k1			k2					k9		m1			m2					m9		CONCRETE (CY/FT)				STEEL
FILL	S	H	A	B	C	D	SIZE	SP.	L	SIZE	SP.	NO.	SIZE	SP.	NO.	SIZE	SP.	NO.	SIZE	SP.	NO.	SIZE	SP.	NO.	SIZE	SP.	L	SIZE	SP.	L	H	V	SIZE	L	SIZE	SP.	L	SIZE	SP.	L	H	V	SIZE	L	SLAB	FLOOR	WALLS	TOTAL	(LB/FT)
0	8	4	12.5	11	9	9	4	9	5'-10	4	6	16	5	12	7	4	13	6	4	12	9	4	17	6	6	9	9'-2	5	12	6'-0	2'-9	3'-3	5	9'-2	6	9	9'-8	6	12	7'-9	3'-5	4'-4	6	9'-8	0.399	0.376	0.202	0.977	121.55
1	8	4	10.5	10.5	9	9	5	12	5'-8	4	6	16	5	12	7	4	14	6	4	12	9	4	14	6	6	9	9'-2	4	6	6'-0	3'-0	3'-0	4	9'-2	6	9	9'-8	4	6	7'-4	3'-0	4'-4	4	9'-8	0.340	0.361	0.202	0.903	120.08
2	8	4	8	10	9	6	4	6	5'-5	4	6	16	5	12	7	4	13	6	4	12	9	4	13	6	6	9	9'-2	5	9	5'-8	2'-10	2'-10	5	9'-2	5	6	9'-8	5	9	7'-0	2'-9	4'-3	5	9'-8	0.267	0.345	0.202	0.814	123.71
3	8	4	8	10	9	6	4	6	5'-5	4	6	16	4	12	7	4	11	6	4	12	9	4	11	6	6	9	9'-2	4	6	5'-3	2'-5	2'-10	4	9'-2	5	6	9'-8	4	6	6'-9	2'-6	4'-3	4	9'-8	0.267	0.345	0.202	0.814	116.37
4-7	8	4	8	10	9	9	4	9	5'-5	4	6	16	4	12	7	4	11	6	4	12	9	4	11	6	6	9	9'-2	4	6	5'-3	2'-5	2'-10	4	9'-2	5	6	9'-8	4	6	6'-8	2'-5	4'-3	4	9'-8	0.267	0.345	0.202	0.814	111.39
8-10	8	4	8	10	9	9	4	9	5'-5	4	6	16	4	12	7	4	10	6	4	12	9	4	10	6	6	9	9'-2	4	6	5'-2	2'-4	2'-10	4	9'-2	5	6	9'-8	4	6	6'-7	2'-4	4'-3	4	9'-8	0.267	0.345	0.202	0.814	110.95
11-15	8	4	8	10	9	6	4	6	5'-5	4	6	16	4	12	7	4	10	6	4	12	9	4	10	6	6	6	9'-2	5	9	5'-2	2'-4	2'-10	5	9'-2	6	6	9'-8	5	9	6'-7	2'-4	4'-3	5	9'-8	0.267	0.345	0.202	0.814	136.13
16-20	8	4	8.5	10.5	9	9	4	12	5'-6	4	6	16	4	12	7	4	10	6	4	12	9	4	10	6	6	6	9'-2	5	6	5'-1	2'-3	2'-10	5	9'-2	7	6	9'-8	5	6	6'-7	2'-3	4'-4	5	9'-8	0.282	0.361	0.202	0.845	154.92
21-25	8	4	10	12	9	9	4	12	5'-9	4	6	16	4	12	7	4	18	4	4	12	9	4	18	4	7	6	9'-2	5	6	5'-1	2'-1	3'-0	5	9'-2	7	6	9'-8	5	6	6'-6	2'-1	4'-5	5	9'-8	0.326	0.407	0.202	0.935	162.37
26-30	8	4	11	13.5	9	9	4	9	5'-11	4	6	16	4	12	7	4	18	4	4	12	9	4	17	4	7	6	9'-2	6	9	5'-6	2'-1	3'-5	6	9'-2	7	6	9'-8	6	9	6'-7	2'-0	4'-7	6	9'-8	0.355	0.453	0.202	1.010	167.24
31-35	8	4	12.5	14.5	9	6	4	6	6'-2	4	6	16	4	12	7	4	17	4	4	12	9	4	17	4	7	6	9'-2	6	12	5'-6	2'-0	3'-6	6	9'-2	7	6	9'-8	6	12	6'-8	2'-0	4'-8	6	9'-8	0.399	0.484	0.202	1.085	161.89
36-40	8	4	13.5	16	9	6	4	6	6'-4	4	6	16	4	12	7	4	17	4	4	12	9	4	18	4	9	9	9'-2	6	12	5'-8	2'-0	3'-8	6	9'-2	9	9	9'-8	6	12	6'-10	2'-1	4'-9	6	9'-8	0.428	0.530	0.202	1.160	174.76
41-45	8	4	14.5	16.5	9.5	9	4	12	6'-6	4	6	16	4	12	7	4	17	4	4	12	9	4	9	6	9	9	9'-3	6	9	5'-9	2'-1	3'-8	6	9'-3	8	6	9'-9	6	9	7'-0	2'-2	4'-10	6	9'-9	0.463	0.551	0.213	1.227	188.26
46-50	8	4	15.5	17.5	9.5	6	4	6	6'-8	4	6	16	4	12	7	4	10	6	4	12	9	4	9	6	8	6	9'-3	6	12	6'-1	2'-4	3'-9	6	9'-3	8	6	9'-9	6	12	7'-2	2'-3	4'-11	6	9'-9	0.492	0.582	0.213	1.287	194.21
51-55	8	4	16	18.5	10	6	4	6	6'-9	4	6	16	4	12	7	4	10	6	4	12	9	4	10	6	8	6	9'-4	6	12	6'-3	2'-5	3'-10	6	9'-4	8	6	9'-10	6	12	7'-4	2'-4	5'-0	6	9'-10	0.512	0.619	0.224	1.355	196.42

BENT BAR DETAIL

BARS	D
4	3
5	$3\frac{3}{4}$
6	$4\frac{1}{2}$

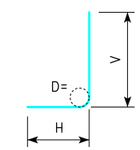

k2 & m2

NOTE:
ALL DIMENSIONS ARE OUT TO OUT.
D = PIN DIAMETER.

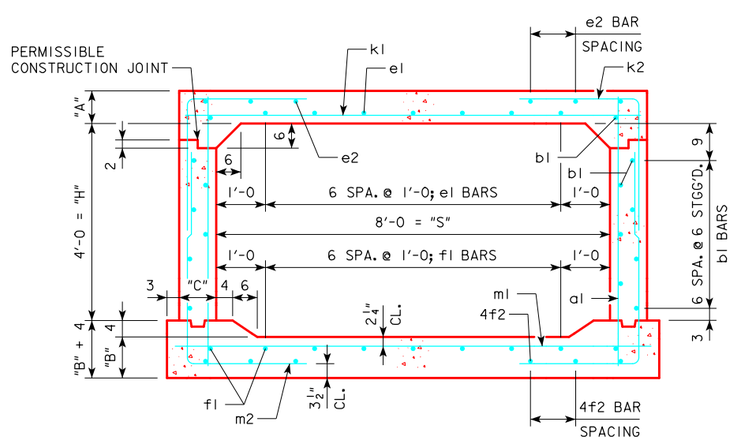

8 x 4 BARREL SECTION

NOTES:

1. DIMENSIONS LISTED ON THIS SHEET TO BE USED IN CONJUNCTION WITH SHEET RCB G2-12.
2. THE k2 AND m2 BARS HORIZONTAL LEGS MAY LAP IN LOW FILL SITUATIONS.
3. DIMENSIONS "A", "B", "C", "D", AND "SP." LISTED IN THE BAR LIST ARE IN INCHES.

LATEST REVISION DATE

APPROVED BY BRIDGE ENGINEER

IOWA DOT Highway Division

STANDARD DESIGN

SINGLE REINFORCED CONCRETE BOX CULVERTS

APRIL, 2012

CULVERT BARREL DETAILS

8 x 4 BARREL SECTIONS

RCB 8-4-12

ENGLISHLRFDSIGNEDSINGLECULVERTS.DGN - RCB 8-4-12 - THIS SHEET ISSUED 04-12.

VARIABLE DIMENSIONS AND QUANTITIES FOR 8 x 5 BARREL SECTIONS

DIMENSIONS							BAR LIST																																				QUANTITIES				
							a1			b1			e1			e2			f1			f2			k1			k2					k9		m1			m2					m9		CONCRETE (CY/FT)				STEEL
FILL	S	H	A	B	C	D	SIZE	SP.	L	SIZE	SP.	NO.	SIZE	SP.	NO.	SIZE	SP.	NO.	SIZE	SP.	NO.	SIZE	SP.	NO.	SIZE	SP.	L	SIZE	SP.	L	H	V	SIZE	L	SIZE	SP.	L	SIZE	SP.	L	H	V	SIZE	L	SLAB	FLOOR	WALLS	TOTAL	(LB/FT)
0	8	5	12.5	11	9	9	4	9	6'-10	4	6	20	5	12	7	4	18	6	4	12	9	4	17	6	6	9	9'-2	5	12	6'-10	3'-7	3'-3	5	9'-2	6	9	9'-8	6	12	8'-9	3'-5	5'-4	6	9'-8	0.399	0.376	0.257	1.032	131.11
1	8	5	10.5	10.5	9	9	5	12	6'-8	4	6	20	5	12	7	4	17	6	4	12	9	4	15	6	6	9	9'-2	4	6	6'-6	3'-6	3'-0	4	9'-2	6	9	9'-8	4	6	8'-5	3'-1	5'-4	4	9'-8	0.340	0.361	0.257	0.958	129.16
2	8	5	8	10	9	9	5	12	6'-5	4	6	20	5	12	7	4	13	6	4	12	9	4	13	6	6	9	9'-2	4	6	5'-8	2'-10	2'-10	4	9'-2	5	6	9'-8	4	6	8'-0	2'-9	5'-3	4	9'-8	0.267	0.345	0.257	0.869	125.39
3	8	5	8	10	9	9	5	12	6'-5	4	6	20	4	12	7	4	11	6	4	12	9	4	11	6	6	9	9'-2	4	6	5'-4	2'-6	2'-10	4	9'-2	5	6	9'-8	4	6	7'-9	2'-6	5'-3	4	9'-8	0.267	0.345	0.257	0.869	121.21
4-7	8	5	8	10	9	9	4	9	6'-5	4	6	20	4	12	7	4	11	6	4	12	9	4	11	6	6	9	9'-2	4	6	5'-3	2'-5	2'-10	4	9'-2	5	6	9'-8	4	6	7'-9	2'-6	5'-3	4	9'-8	0.267	0.345	0.257	0.869	118.74
8-10	8	5	8	10	9	9	4	9	6'-5	4	6	20	4	12	7	4	10	6	4	12	9	4	10	6	6	9	9'-2	4	6	5'-2	2'-4	2'-10	4	9'-2	5	6	9'-8	4	6	7'-7	2'-4	5'-3	4	9'-8	0.267	0.345	0.257	0.869	118.08
11-15	8	5	8	10	9	6	4	6	6'-5	4	6	20	4	12	7	4	10	6	4	12	9	4	10	6	6	6	9'-2	5	9	5'-2	2'-4	2'-10	5	9'-2	6	6	9'-8	5	9	7'-7	2'-4	5'-3	5	9'-8	0.267	0.345	0.257	0.869	144.34
16-20	8	5	8.5	11	9	9	4	12	6'-6	4	6	20	4	12	7	4	10	6	4	12	9	4	9	6	6	6	9'-2	5	6	5'-2	2'-3	2'-11	5	9'-2	7	6	9'-8	5	6	7'-6	2'-2	5'-4	5	9'-8	0.282	0.376	0.257	0.915	163.18
21-25	8	5	10	12	9	9	4	12	6'-9	4	6	20	4	12	7	4	18	4	4	12	9	4	9	6	7	6	9'-2	5	6	5'-1	2'-1	3'-0	5	9'-2	7	6	9'-8	5	6	7'-7	2'-2	5'-5	5	9'-8	0.326	0.407	0.257	0.990	172.26
26-30	8	5	11	13.5	9	9	4	12	6'-11	4	6	20	4	12	7	4	18	4	4	12	9	4	18	4	7	6	9'-2	6	9	5'-6	2'-1	3'-5	6	9'-2	7	6	9'-8	6	9	7'-8	2'-1	5'-7	6	9'-8	0.355	0.453	0.257	1.065	173.29
31-35	8	5	12.5	14.5	9	6	4	6	7'-2	4	6	20	4	12	7	4	18	4	4	12	9	4	9	6	7	6	9'-2	6	12	5'-7	2'-1	3'-6	6	9'-2	7	6	9'-8	6	12	7'-10	2'-2	5'-8	6	9'-8	0.399	0.484	0.257	1.140	172.61
36-40	8	5	13.5	15.5	9	6	4	6	7'-4	4	6	20	4	12	7	4	18	4	4	12	9	4	9	6	9	9	9'-2	6	12	5'-8	2'-1	3'-7	6	9'-2	8	6	9'-8	6	12	7'-11	2'-2	5'-9	6	9'-8	0.428	0.515	0.257	1.200	191.34
41-45	8	5	14.5	17	9	6	4	6	7'-6	4	6	20	4	12	7	4	9	6	4	12	9	4	10	6	9	9	9'-2	6	12	5'-11	2'-2	3'-9	6	9'-2	8	6	9'-8	6	12	8'-1	2'-3	5'-10	6	9'-8	0.458	0.561	0.257	1.276	194.47
46-50	8	5	15.5	17.5	9.5	6	4	6	7'-8	4	6	20	4	12	7	4	10	6	4	12	9	4	10	6	8	6	9'-3	6	12	6'-1	2'-4	3'-9	6	9'-3	8	6	9'-9	6	12	8'-3	2'-4	5'-11	6	9'-9	0.492	0.582	0.271	1.345	203.00
51-55	8	5	16	18.5	10	6	4	6	7'-9	4	6	20	4	12	7	4	10	6	4	12	9	4	10	6	8	6	9'-4	6	12	6'-3	2'-5	3'-10	6	9'-4	8	6	9'-10	6	12	8'-5	2'-5	6'-0	6	9'-10	0.512	0.619	0.285	1.416	205.26

BENT BAR DETAIL

BARS	D
4	3
5	$3\frac{3}{4}$
6	$4\frac{1}{2}$

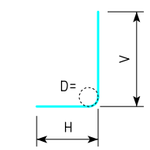

k2 & m2

NOTE:
ALL DIMENSIONS ARE OUT TO OUT.
D = PIN DIAMETER.

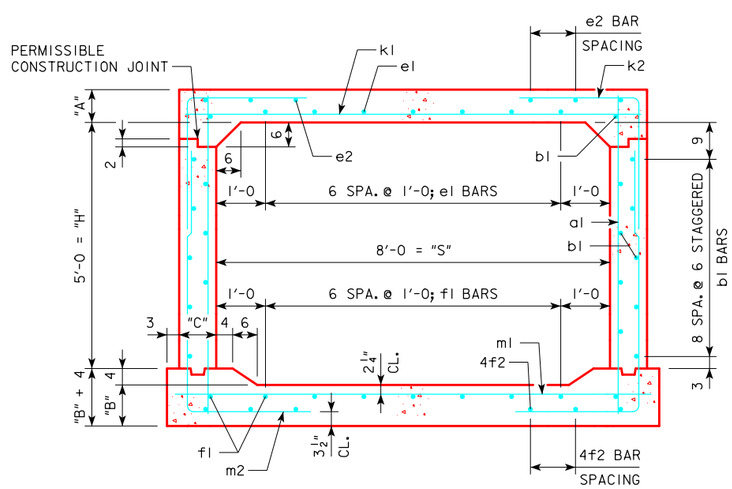

8 x 5 BARREL SECTION

NOTES:

1. DIMENSIONS LISTED ON THIS SHEET TO BE USED IN CONJUNCTION WITH SHEET RCB G2-12.
2. THE k2 AND m2 BARS HORIZONTAL LEGS MAY LAP IN LOW FILL SITUATIONS.
3. DIMENSIONS "A", "B", "C", "D", AND "SP." LISTED IN THE BAR LIST ARE IN INCHES.

LATEST REVISION DATE

APPROVED BY BRIDGE ENGINEER

IOWA DOT Highway Division

STANDARD DESIGN

SINGLE REINFORCED CONCRETE BOX CULVERTS

APRIL, 2012

CULVERT BARREL DETAILS

8 x 5 BARREL SECTIONS

RCB 8-5-12

ENGLISHLRFDSIGNEDSINGLECULVERTS.DGN - RCB 8-5-12 - THIS SHEET ISSUED 04-12.

VARIABLE DIMENSIONS AND QUANTITIES FOR 8 x 6 BARREL SECTIONS

DIMENSIONS							BAR LIST																																				QUANTITIES				
							a1			b1			e1			e2			f1			f2			k1			k2					k9		m1			m2					m9		CONCRETE (CY/FT)				STEEL
FILL	S	H	A	B	C	D	SIZE	SP.	L	SIZE	SP.	NO.	SIZE	SP.	NO.	SIZE	SP.	NO.	SIZE	SP.	NO.	SIZE	SP.	NO.	SIZE	SP.	L	SIZE	SP.	L	H	V	SIZE	L	SIZE	SP.	L	SIZE	SP.	L	H	V	SIZE	L	SLAB	FLOOR	WALLS	TOTAL	(LB/FT)
0	8	6	12.5	11	9	9	4	9	7'-10	4	6	24	5	12	7	4	13	8	4	12	9	4	18	6	6	9	9'-2	5	12	8'-9	5'-6	3'-3	--	--	6	9	9'-8	6	12	9'-11	3'-7	6'-4	6	9'-8	0.399	0.376	0.313	1.088	144.45
1	8	6	10.5	11	9	9	4	9	7'-8	4	6	24	5	12	7	4	13	8	4	12	9	4	18	6	6	9	9'-2	5	12	8'-7	5'-6	3'-1	--	--	6	9	9'-8	6	12	9'-11	3'-7	6'-4	6	9'-8	0.340	0.376	0.313	1.029	143.76
2	8	6	8	10	9	9	5	12	7'-5	4	6	24	5	12	7	4	15	6	4	12	9	4	14	6	5	6	9'-2	4	6	6'-0	3'-2	2'-10	4	9'-2	5	6	9'-8	4	6	9'-2	2'-11	6'-3	4	9'-8	0.267	0.345	0.313	0.925	134.39
3	8	6	8	10	9	9	5	12	7'-5	4	6	24	4	12	7	4	13	6	4	12	9	4	13	6	5	6	9'-2	4	6	5'-8	2'-10	2'-10	4	9'-2	5	6	9'-8	4	6	9'-0	2'-9	6'-3	4	9'-8	0.267	0.345	0.313	0.925	130.45
4-7	8	6	8	10	9	9	4	9	7'-5	4	6	24	4	12	7	4	13	6	4	12	9	4	12	6	6	9	9'-2	4	6	5'-8	2'-10	2'-10	4	9'-2	5	6	9'-8	4	6	8'-11	2'-8	6'-3	4	9'-8	0.267	0.345	0.313	0.925	127.47
8-10	8	6	8	10	9	9	4	9	7'-5	4	6	24	4	12	7	4	11	6	4	12	9	4	11	6	5	6	9'-2	4	6	5'-3	2'-5	2'-10	4	9'-2	5	6	9'-8	4	6	8'-8	2'-5	6'-3	4	9'-8	0.267	0.345	0.313	0.925	125.84
11-15	8	6	8	10	9	6	4	6	7'-5	4	6	24	4	12	7	4	11	6	4	12	9	4	11	6	6	6	9'-2	5	9	5'-3	2'-5	2'-10	5	9'-2	6	6	9'-8	5	9	8'-8	2'-5	6'-3	5	9'-8	0.267	0.345	0.313	0.925	153.05
16-20	8	6	8.5	10.5	9	9	4	12	7'-6	4	6	24	4	12	7	4	10	6	4	12	9	4	10	6	7	6	9'-2	5	6	5'-2	2'-4	2'-10	5	9'-2	7	6	9'-8	5	6	8'-8	2'-4	6'-4	5	9'-8	0.282	0.361	0.313	0.956	182.21
21-25	8	6	10	12	9	9	4	12	7'-9	4	6	24	4	12	7	4	10	6	4	12	9	4	10	6	7	6	9'-2	6	9	5'-8	2'-4	3'-4	6	9'-2	7	6	9'-8	6	9	8'-9	2'-4	6'-5	6	9'-8	0.326	0.407	0.313	1.046	184.95
26-30	8	6	11	13.5	9	9	4	9	7'-11	4	6	24	4	12	7	4	10	6	4	12	9	4	10	6	7	6	9'-2	6	9	5'-8	2'-3	3'-5	6	9'-2	7	6	9'-8	6	9	8'-10	2'-3	6'-7	6	9'-8	0.355	0.453	0.313	1.121	188.84
31-35	8	6	12.5	15	9	9	4	12	8'-2	4	6	24	4	12	7	4	10	6	4	12	9	4	10	6	7	6	9'-2	6	9	5'-10	2'-3	3'-7	6	9'-2	7	6	9'-8	6	9	9'-0	2'-4	6'-8	6	9'-8	0.399	0.500	0.313	1.212	187.29
36-40	8	6	13.5	16	9.5	9	4	9	8'-4	4	6	24	4	12	7	4	10	6	4	12	9	4	10	6	9	9	9'-3	6	9	6'-0	2'-4	3'-8	6	9'-3	9	9	9'-9	6	9	9'-2	2'-5	6'-9	6	9'-9	0.433	0.536	0.330	1.299	204.50
41-45	8	6	14.5	16.5	10.5	9	4	9	8'-6	4	6	24	4	12	7	4	10	6	4	12	9	4	11	6	9	9	9'-5	5	6	5'-10	2'-6	3'-4	5	9'-5	8	6	9'-11	5	6	9'-5	2'-7	6'-10	5	9'-11	0.473	0.560	0.366	1.399	213.53
46-50	8	6	15	17.5	10.5	9	4	9	8'-7	4	6	24	4	12	7	4	10	6	4	12	9	4	11	6	8	6	9'-5	5	6	5'-11	2'-6	3'-5	5	9'-5	8	6	9'-11	5	6	9'-6	2'-7	6'-11	5	9'-11	0.488	0.592	0.366	1.446	220.66
51-55	8	6	16	18.5	11.5	6	4	6	8'-9	4	6	24	4	12	7	4	11	6	4	12	9	4	11	6	8	6	9'-7	6	9	6'-6	2'-8	3'-10	6	9'-7	8	6	10'-1	6	9	9'-9	2'-9	7'-0	6	10'-1	0.529	0.635	0.400	1.564	233.82

BENT BAR DETAIL

BARS	D
4	3
5	$3\frac{3}{4}$
6	$4\frac{1}{2}$

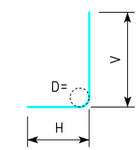

k2 & m2

NOTE:
ALL DIMENSIONS ARE OUT TO OUT.
D = PIN DIAMETER.

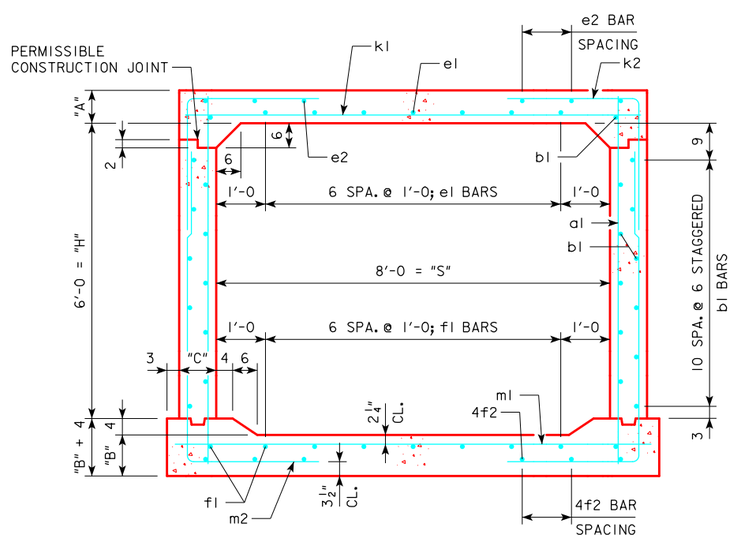

8 x 6 BARREL SECTION

NOTES:

1. DIMENSIONS LISTED ON THIS SHEET TO BE USED IN CONJUNCTION WITH SHEET RCB G2-12.
2. THE k2 AND m2 BARS HORIZONTAL LEGS MAY LAP IN LOW FILL SITUATIONS.
3. DIMENSIONS "A", "B", "C", "D", AND "SP." LISTED IN THE BAR LIST ARE IN INCHES.

LATEST REVISION DATE

APPROVED BY BRIDGE ENGINEER

IOWA DOT Highway Division

STANDARD DESIGN

SINGLE REINFORCED CONCRETE BOX CULVERTS

APRIL, 2012

CULVERT BARREL DETAILS

8 x 6 BARREL SECTIONS

RCB 8-6-12

ENGLISHLRFDSIGNEDSINGLECULVERTS.DGN - RCB 8-6-12 - THIS SHEET ISSUED 04-12.

VARIABLE DIMENSIONS AND QUANTITIES FOR 8 x 7 BARREL SECTIONS

DIMENSIONS							BAR LIST																																				QUANTITIES				
							a1			b1			e1			e2			f1			f2			k1			k2					k9		m1			m2					m9		CONCRETE (CY/FT)				STEEL
FILL	S	H	A	B	C	D	SIZE	SP.	L	SIZE	SP.	NO.	SIZE	SP.	NO.	SIZE	SP.	NO.	SIZE	SP.	NO.	SIZE	SP.	NO.	SIZE	SP.	L	SIZE	SP.	L	H	V	SIZE	L	SIZE	SP.	L	SIZE	SP.	L	H	V	SIZE	L	SLAB	FLOOR	WALLS	TOTAL	(LB/FT)
0	8	7	12.5	11	9	9	4	9	8'-10	4	6	28	5	12	7	4	13	8	4	12	9	4	14	8	6	9	9'-2	5	12	8'-9	5'-6	3'-3	--	--	5	6	9'-8	6	12	11'-5	4'-1	7'-4	6	9'-8	0.399	0.376	0.368	1.143	155.24
1	8	7	10.5	11	9	9	4	9	8'-8	4	6	28	5	12	7	4	13	8	4	12	9	4	15	8	6	9	9'-2	5	12	8'-7	5'-6	3'-1	--	--	5	6	9'-8	6	12	11'-10	4'-6	7'-4	6	9'-8	0.340	0.376	0.368	1.084	155.92
2	8	7	8	10	9	9	5	12	8'-5	4	6	28	5	12	7	4	14	8	4	12	9	4	17	6	5	6	9'-2	4	6	6'-11	4'-1	2'-10	4	9'-2	7	9	9'-8	4	6	10'-8	3'-5	7'-3	4	9'-8	0.267	0.345	0.368	0.980	154.21
3	8	7	8	10	9	9	5	12	8'-5	4	6	28	4	12	7	4	16	6	4	12	9	4	15	6	5	6	9'-2	4	6	6'-2	3'-4	2'-10	4	9'-2	7	9	9'-8	4	6	10'-5	3'-2	7'-3	4	9'-8	0.267	0.345	0.368	0.980	147.58
4-8	8	7	8	10	9	9	4	9	8'-5	4	6	28	4	12	7	4	15	6	4	12	9	4	14	6	5	6	9'-2	4	6	6'-2	3'-1	3'-1	4	9'-2	5	6	9'-8	4	6	10'-3	3'-0	7'-3	4	9'-8	0.267	0.345	0.368	0.980	137.03
9-10	8	7	8	10	9	9	4	12	8'-5	4	6	28	4	12	7	4	11	6	4	12	9	4	11	6	6	9	9'-2	4	6	5'-3	2'-5	2'-10	4	9'-2	5	6	9'-8	4	6	9'-8	2'-5	7'-3	4	9'-8	0.267	0.345	0.368	0.980	129.29
11-15	8	7	8	10	9	9	4	12	8'-5	4	6	28	4	12	7	4	11	6	4	12	9	4	11	6	6	6	9'-2	5	6	5'-4	2'-6	2'-10	5	9'-2	6	6	9'-8	5	6	9'-9	2'-6	7'-3	5	9'-8	0.267	0.345	0.368	0.980	170.74
16-20	8	7	9	10.5	9	9	4	12	8'-6	4	6	28	4	12	7	4	11	6	4	12	9	4	11	6	8	9	9'-2	5	6	5'-4	2'-5	2'-11	5	9'-2	7	6	9'-8	5	6	9'-9	2'-5	7'-4	5	9'-8	0.296	0.361	0.368	1.025	187.68
21-25	8	7	10	12	9	9	4	9	8'-9	4	6	28	4	12	7	4	11	6	4	12	9	4	11	6	7	6	9'-2	6	9	5'-9	2'-5	3'-4	6	9'-2	7	6	9'-8	6	9	9'-11	2'-6	7'-5	6	9'-8	0.326	0.407	0.368	1.101	197.89
26-30	8	7	11	13.5	9	9	4	9	8'-11	4	6	28	4	12	7	4	11	6	4	12	9	4	11	6	7	6	9'-2	6	9	5'-10	2'-5	3'-5	6	9'-2	7	6	9'-8	6	9	10'-1	2'-6	7'-7	6	9'-8	0.355	0.453	0.368	1.176	199.26
31-35	8	7	12.5	14.5	10.5	9	4	9	9'-2	4	6	28	4	12	7	4	11	6	4	12	9	4	11	6	7	6	9'-5	5	6	5'-9	2'-7	3'-2	5	9'-5	7	6	9'-11	5	6	10'-4	2'-8	7'-8	5	9'-11	0.412	0.497	0.431	1.340	202.68
36-40	8	7	13.5	16	11	6	4	6	9'-4	4	6	28	4	12	7	4	11	6	4	12	9	4	12	6	7	6	9'-6	6	9	6'-4	2'-8	3'-8	6	9'-6	7	6	10'-0	6	9	10'-6	2'-9	7'-9	6	10'-0	0.447	0.549	0.451	1.447	214.87
41-45	8	7	14.5	17	11.5	6	4	6	9'-6	4	6	28	4	12	7	4	11	6	4	12	9	4	12	6	9	9	9'-7	6	9	6'-6	2'-9	3'-9	6	9'-7	9	9	10'-1	6	9	10'-8	2'-10	7'-10	6	10'-1	0.483	0.587	0.471	1.541	229.21
46-50	8	7	15	17.5	12.5	6	4	6	9'-7	4	6	28	4	12	7	4	12	6	4	12	9	4	12	6	9	9	9'-9	5	6	6'-4	2'-11	3'-5	5	9'-9	9	9	10'-3	5	6	10'-11	3'-0	7'-11	5	10'-3	0.508	0.614	0.512	1.634	231.50
51-55	8	7	16	18.5	13	6	4	6	9'-9	4	6	28	4	12	7	4	12	6	4	12	9	4	13	6	8	6	9'-10	5	6	6'-6	3'-0	3'-6	5	9'-10	8	6	10'-4	5	6	11'-1	3'-1	8'-0	5	10'-4	0.545	0.652	0.532	1.729	247.68

BENT BAR DETAIL

BARS	D
4	3
5	$3\frac{3}{4}$
6	$4\frac{1}{2}$

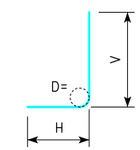

k2 & m2

NOTE:
ALL DIMENSIONS ARE OUT TO OUT.
D = PIN DIAMETER.

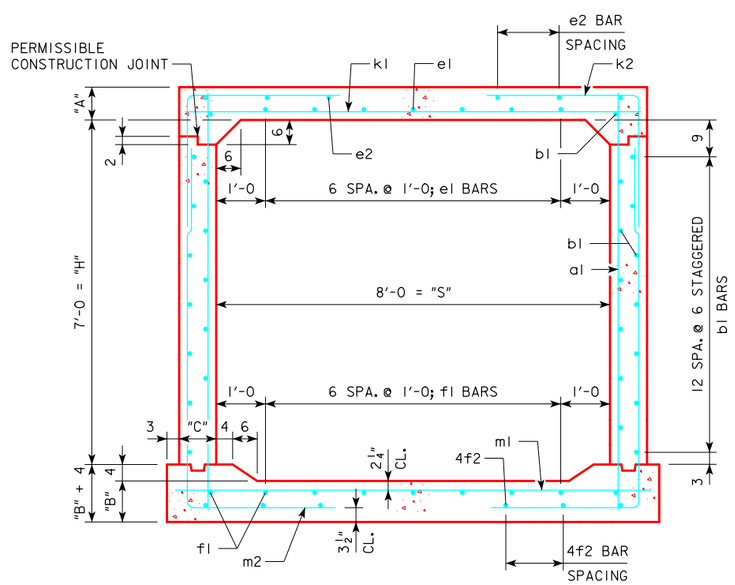

8 x 7 BARREL SECTION

NOTES:

1. DIMENSIONS LISTED ON THIS SHEET TO BE USED IN CONJUNCTION WITH SHEET RCB G2-12.
2. THE k2 AND m2 BARS HORIZONTAL LEGS MAY LAP IN LOW FILL SITUATIONS.
3. DIMENSIONS "A", "B", "C", "D", AND "SP." LISTED IN THE BAR LIST ARE IN INCHES.

LATEST REVISION DATE

APPROVED BY BRIDGE ENGINEER

IOWA DOT Highway Division

STANDARD DESIGN

SINGLE REINFORCED CONCRETE BOX CULVERTS

APRIL, 2012

CULVERT BARREL DETAILS

8 x 7 BARREL SECTIONS

RCB 8-7-12

ENGLISHLRFDSIGNEDSINGLECULVERTS.DGN - RCB 8-7-12 - THIS SHEET ISSUED 04-12.

VARIABLE DIMENSIONS AND QUANTITIES FOR 8 x 8 BARREL SECTIONS

DIMENSIONS							BAR LIST																																				QUANTITIES				
							a1			b1			e1			e2			f1			f2			k1			k2					k9		m1			m2					m9		CONCRETE (CY/FT)				STEEL
FILL	S	H	A	B	C	D	SIZE	SP.	L	SIZE	SP.	NO.	SIZE	SP.	NO.	SIZE	SP.	NO.	SIZE	SP.	NO.	SIZE	SP.	NO.	SIZE	SP.	L	SIZE	SP.	L	H	V	SIZE	L	SIZE	SP.	L	SIZE	SP.	L	H	V	SIZE	L	SLAB	FLOOR	WALLS	TOTAL	(LB/FT)
0	8	8	12.5	11	9	9	4	9	9'-10	4	6	32	5	12	7	4	13	8	4	12	9	4	13	8	6	9	9'-2	5	12	8'-9	5'-6	3'-3	--	--	5	6	9'-8	6	12	14'-0	5'-8	8'-4	--	--	0.399	0.376	0.424	1.199	167.26
1	8	8	10.5	11	9	9	4	9	9'-8	4	6	32	5	12	7	4	13	8	4	12	9	4	13	8	6	9	9'-2	4	6	8'-7	5'-6	3'-1	--	--	5	6	9'-8	4	6	13'-10	5'-6	8'-4	--	--	0.340	0.376	0.424	1.140	162.61
2	8	8	8	10	9	9	5	12	9'-5	4	6	32	5	12	7	4	13	8	4	12	9	4	13	8	7	9	9'-2	5	9	8'-4	5'-6	2'-10	--	--	6	6	9'-8	5	9	12'-11	4'-8	8'-3	--	--	0.267	0.345	0.424	1.036	182.47
3	8	8	8	10	9	9	5	12	9'-5	4	6	32	4	12	7	4	13	8	4	12	9	4	13	8	5	6	9'-2	5	9	7'-9	4'-11	2'-10	--	--	6	6	9'-8	5	9	12'-2	3'-11	8'-3	5	9'-8	0.267	0.345	0.424	1.036	169.76
4-7	8	8	8	10	9	9	4	9	9'-5	4	6	32	4	12	7	4	12	8	4	12	9	4	17	6	6	9	9'-2	4	6	6'-7	3'-9	2'-10	4	9'-2	5	6	9'-8	4	6	11'-8	3'-5	8'-3	4	9'-8	0.267	0.345	0.424	1.036	147.61
8-10	8	8	8	10	9	9	5	12	9'-5	4	6	32	4	12	7	4	14	6	4	12	9	4	14	6	5	6	9'-2	5	9	6'-0	3'-0	3'-0	5	9'-2	7	9	9'-8	5	9	11'-3	3'-0	8'-3	5	9'-8	0.267	0.345	0.424	1.036	158.00
11-15	8	8	8	10	9	9	4	12	9'-5	4	6	32	4	12	7	4	13	6	4	12	9	4	12	6	6	6	9'-2	5	6	5'-8	2'-10	2'-10	5	9'-2	6	6	9'-8	5	6	10'-11	2'-8	8'-3	5	9'-8	0.267	0.345	0.424	1.036	181.05
16-20	8	8	9	10.5	9	9	4	9	9'-6	4	6	32	4	12	7	4	12	6	4	12	9	4	13	6	8	9	9'-2	6	9	5'-11	2'-8	3'-3	6	9'-2	7	6	9'-8	6	9	11'-1	2'-9	8'-4	6	9'-8	0.296	0.361	0.424	1.081	203.63
21-25	8	8	10	12.5	9.5	9	4	12	9'-9	4	6	32	4	12	7	4	11	6	4	12	9	4	12	6	7	6	9'-3	5	6	5'-7	2'-7	3'-0	5	9'-3	7	6	9'-9	5	6	11'-2	2'-8	8'-6	5	9'-9	0.329	0.427	0.447	1.203	203.63
26-30	8	8	11	13.5	10.5	9	5	12	9'-11	4	6	32	4	12	7	4	12	6	4	12	9	4	12	6	7	6	9'-5	5	6	5'-10	2'-9	3'-1	5	9'-5	7	6	9'-11	5	6	11'-5	2'-10	8'-7	5	9'-11	0.367	0.465	0.496	1.328	215.03
31-35	8	8	12.5	15	11.5	6	4	6	10'-2	4	6	32	4	12	7	4	12	6	4	12	9	4	13	6	7	6	9'-7	6	9	6'-5	2'-10	3'-7	6	9'-7	7	6	10'-1	6	9	11'-8	3'-0	8'-8	6	10'-1	0.421	0.522	0.542	1.485	225.63
36-40	8	8	13.5	16	12.5	9	6	9	10'-4	4	6	32	4	12	7	4	12	6	4	12	9	4	13	6	7	6	9'-9	6	9	6'-8	3'-0	3'-8	6	9'-9	7	6	10'-3	6	9	11'-10	3'-1	8'-9	6	10'-3	0.462	0.565	0.589	1.616	243.29
41-45	8	8	14.5	17	13.5	9	6	12	10'-6	4	6	32	4	12	7	4	14	6	4	12	9	4	13	6	7	6	9'-11	5	6	6'-10	3'-5	3'-5	5	9'-11	7	6	10'-5	5	6	12'-1	3'-3	8'-10	5	10'-5	0.503	0.608	0.636	1.747	237.39
46-50	8	8	15	18	14	9	6	9	10'-8	4	6	32	4	12	7	4	14	6	4	12	9	4	14	6	9	9	10'-0	5	6	6'-10	3'-5	3'-5	5	10'-0	9	9	10'-6	5	6	12'-3	3'-4	8'-11	5	10'-6	0.524	0.647	0.659	1.830	261.74
51-55	8	8	16	18.5	15	9	4	9	10'-9	4	6	32	4	12	7	4	13	6	4	12	9	4	14	6	9	9	10'-2	7	9	7'-8	3'-4	4'-4	7	10'-2	9	9	10'-8	7	9	12'-5	3'-5	9'-0	7	10'-8	0.566	0.675	0.706	1.947	274.53

BENT BAR DETAIL

BARS	D
4	3
5	$3\frac{3}{4}$
6	$4\frac{1}{2}$
7	$5\frac{1}{4}$

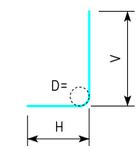

k2 & m2

NOTE:
ALL DIMENSIONS ARE OUT TO OUT.
D = PIN DIAMETER.

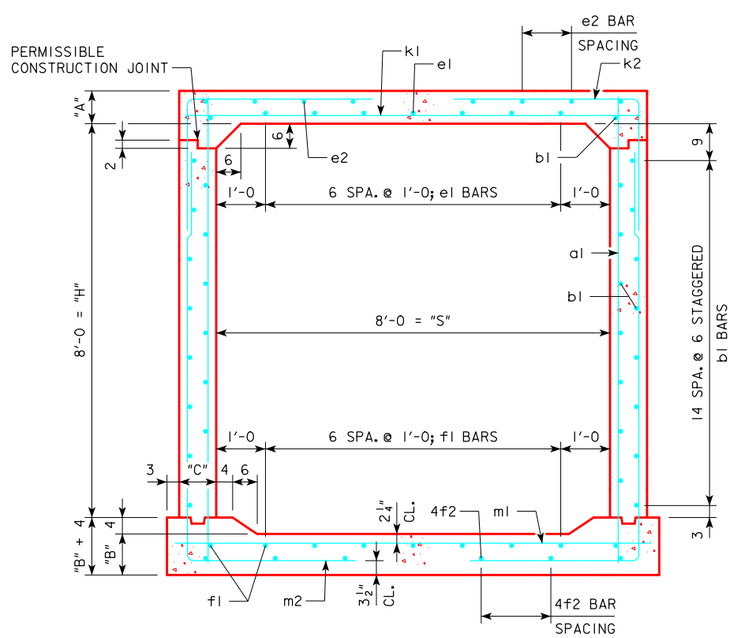

8 x 8 BARREL SECTION

NOTES:

1. DIMENSIONS LISTED ON THIS SHEET TO BE USED IN CONJUNCTION WITH SHEET RCB G2-12.
2. THE k2 AND m2 BARS HORIZONTAL LEGS MAY LAP IN LOW FILL SITUATIONS.
3. DIMENSIONS "A", "B", "C", "D", AND "SP." LISTED IN THE BAR LIST ARE IN INCHES.

LATEST REVISION DATE

APPROVED BY BRIDGE ENGINEER

IOWA DOT Highway Division

STANDARD DESIGN

SINGLE REINFORCED CONCRETE BOX CULVERTS

APRIL, 2012

CULVERT BARREL DETAILS

8 x 8 BARREL SECTIONS

RCB 8-8-12

ENGLISHLRFDSIGNEDSINGLECULVERTS.DGN - RCB 8-8-12 - THIS SHEET ISSUED 04-12.

VARIABLE DIMENSIONS AND QUANTITIES FOR 8 x 9 BARREL SECTIONS

DIMENSIONS							BAR LIST																																				QUANTITIES				
							a1			b1			e1			e2			f1			f2			k1			k2					k9		m1			m2					m9		CONCRETE (CY/FT)				STEEL
FILL	S	H	A	B	C	D	SIZE	SP.	L	SIZE	SP.	NO.	SIZE	SP.	NO.	SIZE	SP.	NO.	SIZE	SP.	NO.	SIZE	SP.	NO.	SIZE	SP.	L	SIZE	SP.	L	H	V	SIZE	L	SIZE	SP.	L	SIZE	SP.	L	H	V	SIZE	L	SLAB	FLOOR	WALLS	TOTAL	(LB/FT)
0	8	9	12.5	11	9	9	4	9	10'-10	4	6	36	5	12	7	4	13	8	4	12	9	4	13	8	5	6	9'-2	5	12	8'-9	5'-6	3'-3	--	--	5	6	9'-8	6	12	15'-0	5'-8	9'-4	--	--	0.399	0.376	0.479	1.254	175.11
1	8	9	10.5	11	9	9	5	12	10'-8	4	6	36	5	12	7	4	13	8	4	12	9	4	13	8	6	9	9'-2	5	9	8'-7	5'-6	3'-1	--	--	5	6	9'-8	5	9	14'-10	5'-6	9'-4	--	--	0.340	0.376	0.479	1.195	178.21
2	8	9	8	10	9	6	4	6	10'-5	4	6	36	5	12	7	4	13	8	4	12	9	4	13	8	7	9	9'-2	5	9	8'-4	5'-6	2'-10	--	--	6	6	9'-8	5	9	14'-9	5'-6	9'-3	--	--	0.267	0.345	0.479	1.091	198.16
3	8	9	8	10	9	6	4	6	10'-5	4	6	36	4	12	7	4	13	8	4	12	9	4	13	8	7	9	9'-2	5	9	8'-4	5'-6	2'-10	--	--	6	6	9'-8	5	9	14'-9	5'-6	9'-3	--	--	0.267	0.345	0.479	1.091	195.55
4-8	8	9	8	10	9	9	5	12	10'-5	4	6	36	4	12	7	4	13	8	4	12	9	4	13	8	5	6	9'-2	5	9	8'-4	5'-6	2'-10	--	--	6	6	9'-8	5	9	13'-11	4'-8	9'-3	--	--	0.267	0.345	0.479	1.091	180.82
9-10	8	9	8	10	9	9	4	9	10'-5	4	6	36	4	12	7	4	15	6	4	12	9	4	15	6	5	6	9'-2	5	9	6'-2	3'-1	3'-1	5	9'-2	5	6	9'-8	5	9	12'-4	3'-1	9'-3	5	9'-8	0.267	0.345	0.479	1.091	155.71
11-15	8	9	8	10	9	9	4	12	10'-5	4	6	36	4	12	7	4	14	6	4	12	9	4	14	6	6	6	9'-2	5	6	6'-0	3'-0	3'-0	5	9'-2	6	6	9'-8	5	6	12'-3	3'-0	9'-3	5	9'-8	0.267	0.345	0.479	1.091	192.16
16-20	8	9	8.5	10.5	9.5	9	4	9	10'-6	4	6	36	4	12	7	4	13	6	4	12	9	4	13	6	7	6	9'-3	5	6	5'-10	2'-11	2'-11	5	9'-3	7	6	9'-9	5	6	12'-3	2'-11	9'-4	5	9'-9	0.285	0.364	0.506	1.155	217.37
21-25	8	9	10	12.5	11	6	4	6	10'-9	4	6	36	4	12	7	4	15	6	4	12	9	4	14	6	8	9	9'-6	6	9	6'-8	3'-4	3'-4	6	9'-6	7	6	10'-0	6	9	12'-7	3'-1	9'-6	6	10'-0	0.341	0.438	0.587	1.366	230.08
26-30	8	9	11.5	14	12	9	6	12	11'-0	4	6	36	4	12	7	4	13	6	4	12	9	4	14	6	8	9	9'-8	6	9	6'-7	3'-1	3'-6	6	9'-8	7	6	10'-2	6	9	12'-9	3'-2	9'-7	6	10'-2	0.395	0.495	0.640	1.530	236.97
31-35	8	9	12.5	15	13	9	6	9	11'-2	4	6	36	4	12	7	4	13	6	4	12	9	4	14	6	8	9	9'-10	6	9	6'-9	3'-2	3'-7	6	9'-10	7	6	10'-4	6	9	13'-0	3'-4	9'-8	6	10'-4	0.435	0.537	0.693	1.665	251.18
36-40	8	9	13.5	16	14	9	6	9	11'-4	4	6	36	4	12	7	4	14	6	4	12	9	4	14	6	7	6	10'-0	5	6	6'-8	3'-4	3'-4	5	10'-0	7	6	10'-6	5	6	13'-2	3'-5	9'-9	5	10'-6	0.476	0.580	0.746	1.802	257.95
41-45	8	9	14.5	17	15	9	6	9	11'-6	4	6	36	4	12	7	4	14	6	4	12	9	4	15	6	7	6	10'-2	5	6	6'-10	3'-5	3'-5	5	10'-2	7	6	10'-8	5	6	13'-5	3'-7	9'-10	5	10'-8	0.518	0.625	0.799	1.942	261.76
46-50	8	9	15.5	18	15.5	9	4	9	11'-8	4	6	36	4	12	7	4	14	6	4	12	9	4	15	6	7	6	10'-3	7	9	7'-11	3'-7	4'-4	7	10'-3	7	6	10'-9	7	9	13'-7	3'-8	9'-11	7	10'-9	0.555	0.664	0.825	2.044	275.11
51-55	8	9	16	19	16.5	9	5	12	11'-10	4	6	36	4	12	7	4	14	6	4	12	9	4	15	6	9	9	10'-5	7	9	8'-1	3'-8	4'-5	7	10'-5	9	9	10'-11	7	9	13'-9	3'-9	10'-0	7	10'-11	0.583	0.710	0.878	2.171	295.66

BENT BAR DETAIL

BARS	D
5	$3\frac{3}{4}$
6	$4\frac{1}{2}$
7	$5\frac{1}{4}$

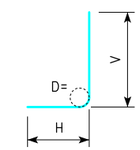

k2 & m2

NOTE:
ALL DIMENSIONS ARE OUT TO OUT.
D = PIN DIAMETER.

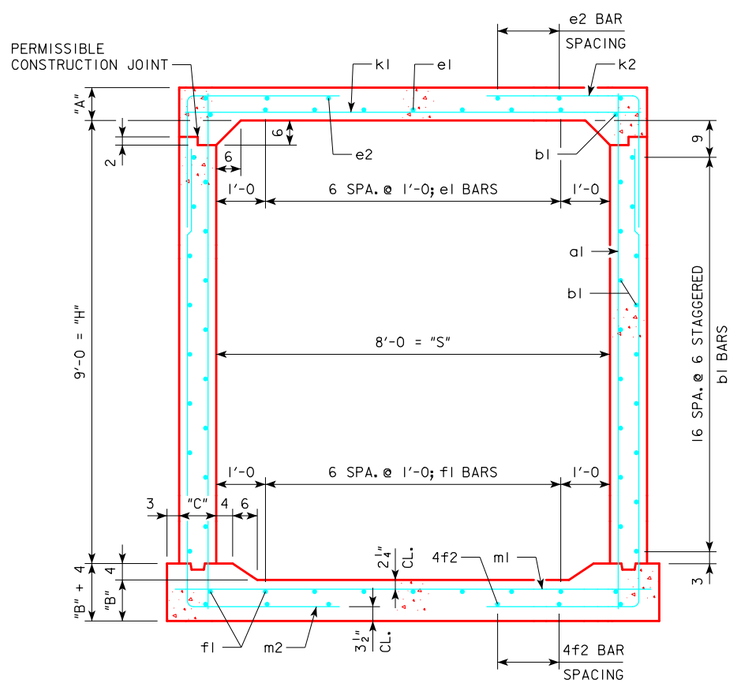

8 x 9 BARREL SECTION

NOTES:

1. DIMENSIONS LISTED ON THIS SHEET TO BE USED IN CONJUNCTION WITH SHEET RCB G2-12.
2. THE k2 AND m2 BARS HORIZONTAL LEGS MAY LAP IN LOW FILL SITUATIONS.
3. DIMENSIONS "A", "B", "C", "D", AND "SP." LISTED IN THE BAR LIST ARE IN INCHES.

LATEST REVISION DATE

APPROVED BY BRIDGE ENGINEER

IOWA DOT Highway Division

STANDARD DESIGN

SINGLE REINFORCED CONCRETE BOX CULVERTS

APRIL, 2012

CULVERT BARREL DETAILS

8 x 9 BARREL SECTIONS

RCB 8-9-12

ENGLISHLRFDSIGNEDSINGLECULVERTS.DGN - RCB 8-9-12 - THIS SHEET ISSUED 04-12.

VARIABLE DIMENSIONS AND QUANTITIES FOR 8 x 10 BARREL SECTIONS

DIMENSIONS							BAR LIST																																				QUANTITIES				
							a1			b1			e1			e2			f1			f2			k1			k2					k9		m1			m2					m9		CONCRETE (CY/FT)				STEEL
FILL	S	H	A	B	C	D	SIZE	SP.	L	SIZE	SP.	NO.	SIZE	SP.	NO.	SIZE	SP.	NO.	SIZE	SP.	NO.	SIZE	SP.	NO.	SIZE	SP.	L	SIZE	SP.	L	H	V	SIZE	L	SIZE	SP.	L	SIZE	SP.	L	H	V	SIZE	L	SLAB	FLOOR	WALLS	TOTAL	(LB/FT)
0	8	10	12.5	11.5	10	9	5	12	11'-11	4	6	40	5	12	7	4	13	8	4	12	9	4	13	8	6	9	9'-4	6	12	9'-3	5'-9	3'-6	--	--	5	6	9'-10	6	12	16'-2	5'-9	10'-5	--	--	0.408	0.400	0.594	1.402	198.45
1	8	10	10.5	11	10	6	4	6	11'-8	4	6	40	5	12	7	4	13	8	4	12	9	4	13	8	6	9	9'-4	5	9	8'-8	5'-7	3'-1	--	--	5	6	9'-10	5	9	15'-11	5'-7	10'-4	--	--	0.348	0.384	0.594	1.326	193.29
2	8	10	8	10	10	9	4	12	11'-5	4	6	40	5	12	7	4	13	8	4	12	9	4	13	8	7	9	9'-4	6	9	8'-11	5'-9	3'-2	--	--	6	6	9'-10	6	9	16'-0	5'-9	10'-3	--	--	0.274	0.352	0.594	1.220	226.82
3-4	8	10	8	10	10	9	4	9	11'-5	4	6	40	4	12	7	4	13	8	4	12	9	4	13	8	5	6	9'-4	6	9	8'-11	5'-9	3'-2	--	--	6	6	9'-10	6	9	16'-0	5'-9	10'-3	--	--	0.274	0.352	0.594	1.220	222.16
5-8	8	10	8	10	10	9	4	9	11'-5	4	6	40	4	12	7	4	13	8	4	12	9	4	13	8	5	6	9'-4	6	9	8'-11	5'-9	3'-2	--	--	6	6	9'-10	6	9	15'-0	4'-9	10'-3	--	--	0.274	0.352	0.594	1.220	217.97
9-10	8	10	8	10	10	9	4	9	11'-5	4	6	40	4	12	7	4	16	6	4	12	9	4	17	6	6	9	9'-4	5	9	6'-3	3'-5	2'-10	5	9'-4	5	6	9'-10	6	9	13'-9	3'-6	10'-3	6	9'-10	0.274	0.352	0.594	1.220	182.89
11-15	8	10	8	10	10	9	4	9	11'-5	4	6	40	4	12	7	4	16	6	4	12	9	4	15	6	6	6	9'-4	5	6	6'-2	3'-4	2'-10	5	9'-4	6	6	9'-10	5	6	13'-6	3'-3	10'-3	5	9'-10	0.274	0.352	0.594	1.220	207.97
16-20	8	10	8.5	11	10.5	9	4	9	11'-6	4	6	40	4	12	7	4	15	6	4	12	9	4	16	6	8	9	9'-5	5	6	6'-2	3'-3	2'-11	5	9'-5	7	6	9'-11	6	6	13'-9	3'-5	10'-4	6	9'-11	0.292	0.386	0.625	1.303	252.87
21-25	8	10	10	12.5	12	6	4	6	11'-9	4	6	40	4	12	7	4	14	6	4	12	9	4	15	6	8	9	9'-8	5	6	6'-6	3'-3	3'-3	5	9'-8	7	6	10'-2	5	6	13'-11	3'-5	10'-6	5	10'-2	0.349	0.446	0.714	1.509	241.87
26-30	8	10	11.5	14	13	9	5	9	12'-0	4	6	40	4	12	7	4	15	6	4	12	9	4	16	6	8	9	9'-10	5	6	6'-10	3'-5	3'-5	5	9'-10	8	9	10'-4	5	6	14'-2	3'-7	10'-7	5	10'-4	0.404	0.504	0.773	1.681	243.61
31-35	8	10	12.5	15	14	6	4	6	12'-2	4	6	40	4	12	7	4	15	6	4	12	9	4	16	6	8	9	10'-0	7	9	7'-8	3'-7	4'-1	7	10'-0	7	6	10'-6	7	9	14'-4	3'-8	10'-8	7	10'-6	0.444	0.547	0.832	1.823	285.89
36-40	8	10	13.5	16	15	6	4	6	12'-4	4	6	40	4	12	7	4	15	6	4	12	9	4	16	6	8	9	10'-2	7	9	7'-10	3'-8	4'-2	7	10'-2	7	6	10'-8	7	9	14'-6	3'-9	10'-9	7	10'-8	0.485	0.591	0.891	1.967	289.61
41-45	8	10	14.5	17	16	6	4	6	12'-6	4	6	40	4	12	7	4	15	6	4	12	9	4	16	6	7	6	10'-4	7	9	8'-0	3'-9	4'-3	7	10'-4	7	6	10'-10	7	9	14'-9	3'-11	10'-10	7	10'-10	0.528	0.635	0.951	2.114	298.03
46-50	8	10	15	18	17.5	6	4	6	12'-8	4	6	40	4	12	7	4	15	6	4	12	9	4	16	6	7	6	10'-7	6	6	7'-8	3'-10	3'-10	6	10'-7	7	6	11'-1	6	6	14'-11	4'-0	10'-11	6	11'-1	0.560	0.687	1.039	2.286	307.74
51-55	8	10	16	19	18	6	4	6	12'-10	4	6	40	4	12	7	4	16	6	4	12	9	4	17	6	9	9	10'-8	6	6	8'-0	4'-0	4'-0	6	10'-8	9	9	11'-2	6	6	15'-2	4'-2	11'-0	6	11'-2	0.599	0.728	1.069	2.396	325.55

BENT BAR DETAIL

BARS	D
5	$3\frac{3}{4}$
6	$4\frac{1}{2}$
7	$5\frac{1}{4}$

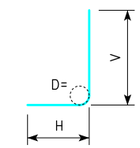

k2 & m2

NOTE:
ALL DIMENSIONS ARE OUT TO OUT.
D = PIN DIAMETER.

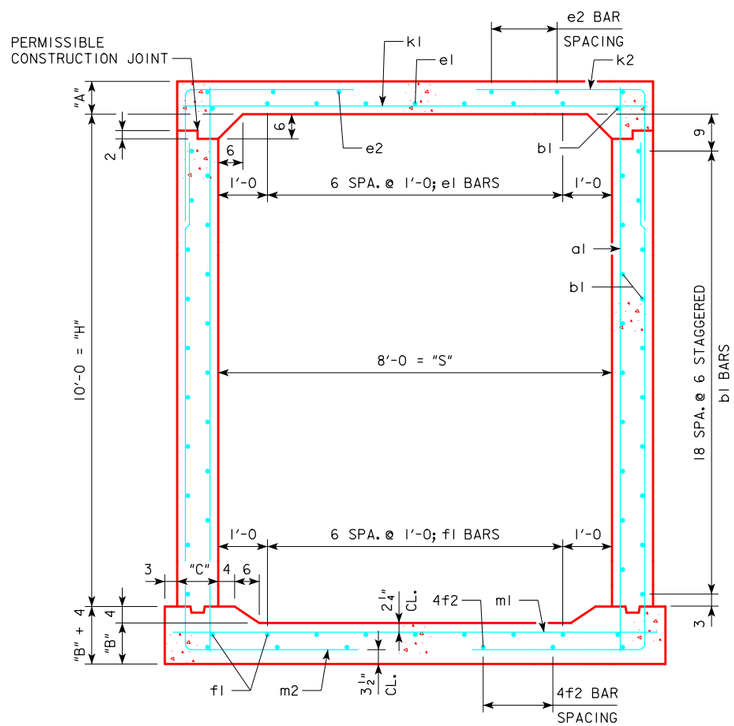

8 x 10 BARREL SECTION

NOTES:

1. DIMENSIONS LISTED ON THIS SHEET TO BE USED IN CONJUNCTION WITH SHEET RCB G2-12.
2. THE k2 AND m2 BARS HORIZONTAL LEGS MAY LAP IN LOW FILL SITUATIONS.
3. DIMENSIONS "A", "B", "C", "D", AND "SP." LISTED IN THE BAR LIST ARE IN INCHES.

LATEST REVISION DATE

APPROVED BY BRIDGE ENGINEER

IOWA DOT Highway Division

STANDARD DESIGN

SINGLE REINFORCED CONCRETE BOX CULVERTS

APRIL, 2012

CULVERT BARREL DETAILS

8 x 10 BARREL SECTIONS

RCB 8-10-12

VARIABLE DIMENSIONS AND QUANTITIES FOR 10 x 4 BARREL SECTIONS

DIMENSIONS							BAR LIST																																				QUANTITIES				
							a1			b1			e1			e2			f1			f2			k1			k2					k9		m1			m2					m9		CONCRETE (CY/FT)				STEEL
FILL	S	H	A	B	C	D	SIZE	SP.	L	SIZE	SP.	NO.	SIZE	SP.	NO.	SIZE	SP.	NO.	SIZE	SP.	NO.	SIZE	SP.	NO.	SIZE	SP.	L	SIZE	SP.	L	H	V	SIZE	L	SIZE	SP.	L	SIZE	SP.	L	H	V	SIZE	L	SLAB	FLOOR	WALLS	TOTAL	(LB/FT)
0	10	4	12.5	12	9	9	4	12	5'-11	4	6	16	4	12	9	4	14	6	4	12	11	4	13	8	5	6	11'-2	6	12	6'-6	2'-11	3'-7	6	11'-2	6	9	11'-8	7	12	8'-3	3'-10	4'-5	7	11'-8	0.476	0.481	0.202	1.159	148.89
1	10	4	12	12	9	9	4	9	5'-11	4	6	16	4	12	9	4	15	6	4	12	11	4	16	6	6	9	11'-2	5	9	6'-4	3'-2	3'-2	5	11'-2	6	9	11'-8	6	9	7'-8	3'-3	4'-5	6	11'-8	0.458	0.481	0.202	1.141	142.32
2	10	4	8	10	9	9	4	9	5'-5	4	6	16	5	12	9	4	16	6	4	12	11	4	15	6	7	9	11'-2	5	6	6'-1	3'-3	2'-10	5	11'-2	7	9	11'-8	5	6	7'-5	3'-2	4'-3	5	11'-8	0.316	0.407	0.202	0.925	168.26
3	10	4	8	10	9	6	4	6	5'-5	4	6	16	4	12	9	4	15	6	4	12	11	4	15	6	7	9	11'-2	6	9	6'-4	3'-2	3'-2	6	11'-2	6	6	11'-8	6	9	7'-4	3'-1	4'-3	6	11'-8	0.316	0.407	0.202	0.925	172.68
4-6	10	4	8	10	9	9	4	12	5'-5	4	6	16	4	12	9	4	14	6	4	12	11	4	14	6	7	9	11'-2	5	6	5'-10	2'-11	2'-11	5	11'-2	6	6	11'-8	5	6	7'-2	2'-11	4'-3	5	11'-8	0.316	0.407	0.202	0.925	162.74
7-10	10	4	8	10	9	9	4	9	5'-5	4	6	16	4	12	9	4	13	6	4	12	11	4	13	6	6	6	11'-2	5	6	5'-8	2'-10	2'-10	5	11'-2	6	6	11'-8	5	6	7'-1	2'-10	4'-3	5	11'-8	0.316	0.407	0.202	0.925	166.11
11-15	10	4	8.5	10.5	9	6	4	6	5'-6	4	6	16	4	12	9	4	13	6	4	12	11	4	12	6	7	6	11'-2	5	6	5'-8	2'-10	2'-10	5	11'-2	7	6	11'-8	5	6	7'-0	2'-8	4'-4	5	11'-8	0.334	0.425	0.202	0.961	195.79
16-20	10	4	10.5	13	9	6	4	6	5'-10	4	6	16	4	12	9	4	10	6	4	12	11	4	10	6	7	6	11'-2	5	6	5'-5	2'-4	3'-1	5	11'-2	7	6	11'-8	5	6	6'-9	2'-3	4'-6	5	11'-8	0.405	0.518	0.202	1.125	194.58
21-25	10	4	12.5	14	9	6	4	6	6'-1	4	6	16	4	12	9	4	9	6	4	12	11	4	10	6	9	9	11'-2	6	9	5'-9	2'-2	3'-7	6	11'-2	8	6	11'-8	6	9	6'-10	2'-3	4'-7	6	11'-8	0.476	0.555	0.202	1.233	218.66
26-30	10	4	14	16	9.5	9	4	9	6'-5	4	6	16	4	12	9	4	9	6	4	12	11	4	10	6	8	6	11'-3	5	6	5'-7	2'-3	3'-4	5	11'-3	8	6	11'-9	5	6	7'-1	2'-4	4'-9	5	11'-9	0.534	0.634	0.213	1.381	222.55
31-35	10	4	15	17.5	10	6	4	6	6'-7	4	6	16	4	12	9	4	10	6	4	12	11	4	10	6	8	6	11'-4	6	9	6'-2	2'-5	3'-9	6	11'-4	8	6	11'-10	6	9	7'-4	2'-5	4'-11	6	11'-10	0.575	0.696	0.224	1.495	233.13
36-40	10	4	16.5	19	11	6	4	6	6'-10	4	6	16	4	12	9	4	10	6	4	12	11	4	11	6	8	6	11'-6	6	9	6'-5	2'-6	3'-11	6	11'-6	8	6	12'-0	6	9	7'-7	2'-7	5'-0	6	12'-0	0.640	0.762	0.247	1.649	237.71
41-45	10	4	17.5	20	11.5	9	6	12	7'-0	4	6	16	4	12	9	4	11	6	4	12	11	4	11	6	8	6	11'-7	6	9	6'-8	2'-8	4'-0	6	11'-7	8	6	12'-1	6	9	7'-9	2'-8	5'-1	6	12'-1	0.682	0.807	0.258	1.747	243.66
46-50	10	4	19	21	12	6	4	6	7'-3	4	6	16	4	12	9	4	11	6	4	12	11	4	11	6	9	6	11'-8	6	9	6'-10	2'-9	4'-1	6	11'-8	9	6	12'-2	6	9	7'-11	2'-9	5'-2	6	12'-2	0.744	0.851	0.269	1.864	279.03
51-55	10	4	20	22.5	12.5	9	6	12	7'-5	4	6	16	4	12	9	4	11	6	5	12	11	4	12	6	9	6	11'-9	6	9	7'-0	2'-10	4'-2	6	11'-9	9	6	12'-3	6	9	8'-3	2'-11	5'-4	6	12'-3	0.787	0.916	0.281	1.984	289.84

BENT BAR DETAIL

BARS	D
5	$3\frac{3}{4}$
6	$4\frac{1}{2}$
7	$5\frac{1}{4}$

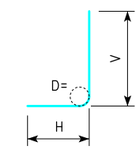

k2 & m2

NOTE:
ALL DIMENSIONS ARE OUT TO OUT.
D = PIN DIAMETER.

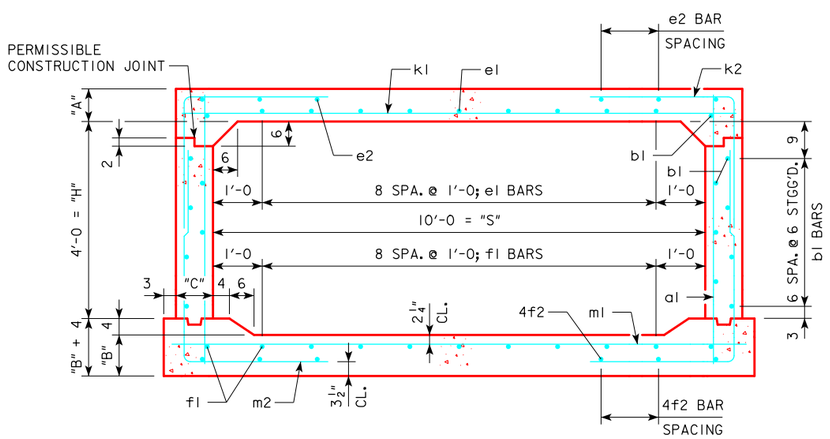

10 x 4 BARREL SECTION

NOTES:

1. DIMENSIONS LISTED ON THIS SHEET TO BE USED IN CONJUNCTION WITH SHEET RCB G2-12.
2. THE k2 AND m2 BARS HORIZONTAL LEGS MAY LAP IN LOW FILL SITUATIONS.
3. DIMENSIONS "A", "B", "C", "D", AND "SP." LISTED IN THE BAR LIST ARE IN INCHES.

LATEST REVISION DATE

APPROVED BY BRIDGE ENGINEER

IOWA DOT Highway Division

STANDARD DESIGN

SINGLE REINFORCED CONCRETE BOX CULVERTS

APRIL, 2012

CULVERT BARREL DETAILS

10 x 4 BARREL SECTIONS

RCB 10-4-12

ENGLISHLRFDSIGNEDSINGLECULVERTS.DGN - RCB 10-4-12 - THIS SHEET ISSUED 04-12.

VARIABLE DIMENSIONS AND QUANTITIES FOR 10 x 5 BARREL SECTIONS

DIMENSIONS							BAR LIST																																				QUANTITIES				
							a1			b1			e1			e2			f1			f2			k1			k2					k9		m1			m2					m9		CONCRETE (CY/FT)				STEEL
FILL	S	H	A	B	C	D	SIZE	SP.	L	SIZE	SP.	NO.	SIZE	SP.	NO.	SIZE	SP.	NO.	SIZE	SP.	NO.	SIZE	SP.	NO.	SIZE	SP.	L	SIZE	SP.	L	H	V	SIZE	L	SIZE	SP.	L	SIZE	SP.	L	H	V	SIZE	L	SLAB	FLOOR	WALLS	TOTAL	(LB/FT)
0	10	5	12.5	12	9	9	4	12	6'-11	4	6	20	4	12	9	4	15	6	4	12	11	4	13	8	5	6	11'-2	6	12	6'-9	3'-2	3'-7	6	11'-2	6	9	11'-8	7	12	9'-4	3'-11	5'-5	7	11'-8	0.476	0.481	0.257	1.214	158.45
1	10	5	12	12	9	6	4	6	6'-11	4	6	20	4	12	9	4	15	6	4	12	11	4	15	6	6	9	11'-2	4	6	6'-4	3'-2	3'-2	4	11'-2	6	9	11'-8	4	6	8'-7	3'-2	5'-5	4	11'-8	0.458	0.481	0.257	1.196	141.95
2	10	5	8	10	9	9	4	9	6'-5	4	6	20	5	12	9	4	15	6	4	12	11	4	15	6	7	9	11'-2	5	6	6'-2	3'-1	3'-1	5	11'-2	6	6	11'-8	5	6	8'-5	3'-2	5'-3	5	11'-8	0.316	0.407	0.257	0.980	179.53
3	10	5	8	10	9	9	4	9	6'-5	4	6	20	4	12	9	4	14	6	4	12	11	4	14	6	6	6	11'-2	5	6	6'-0	3'-0	3'-0	5	11'-2	6	6	11'-8	5	6	8'-2	2'-11	5'-3	5	11'-8	0.316	0.407	0.257	0.980	176.53
4-7	10	5	8	10	9	9	4	12	6'-5	4	6	20	4	12	9	4	14	6	4	12	11	4	14	6	7	9	11'-2	5	6	5'-10	2'-11	2'-11	5	11'-2	6	6	11'-8	5	6	8'-2	2'-11	5'-3	5	11'-8	0.316	0.407	0.257	0.980	170.97
8-10	10	5	8	10	9	9	4	9	6'-5	4	6	20	4	12	9	4	13	6	4	12	11	4	13	6	6	6	11'-2	5	6	5'-8	2'-10	2'-10	5	11'-2	6	6	11'-8	5	6	8'-0	2'-9	5'-3	5	11'-8	0.316	0.407	0.257	0.980	174.39
11-15	10	5	8.5	10.5	9	9	5	12	6'-6	4	6	20	4	12	9	4	13	6	4	12	11	4	12	6	7	6	11'-2	5	6	5'-8	2'-10	2'-10	5	11'-2	7	6	11'-8	5	6	7'-11	2'-7	5'-4	5	11'-8	0.334	0.425	0.257	1.016	201.55
16-20	10	5	10.5	13	9	6	4	6	6'-10	4	6	20	4	12	9	4	10	6	4	12	11	4	10	6	7	6	11'-2	6	9	5'-9	2'-4	3'-5	6	11'-2	7	6	11'-8	6	9	7'-9	2'-3	5'-6	6	11'-8	0.405	0.518	0.257	1.180	205.61
21-25	10	5	12.5	14	9	6	4	6	7'-1	4	6	20	4	12	9	4	9	6	4	12	11	4	10	6	8	6	11'-2	6	9	5'-9	2'-2	3'-7	6	11'-2	8	6	11'-8	6	9	7'-10	2'-3	5'-7	6	11'-8	0.476	0.555	0.257	1.288	235.61
26-30	10	5	13.5	16	9.5	9	5	12	7'-4	4	6	20	4	12	9	4	9	6	4	12	11	4	10	6	8	6	11'-3	5	6	5'-7	2'-3	3'-4	5	11'-3	8	6	11'-9	5	6	8'-1	2'-4	5'-9	5	11'-9	0.516	0.634	0.271	1.421	233.61
31-35	10	5	15	17.5	10	6	4	6	7'-7	4	6	20	4	12	9	4	10	6	4	12	11	4	10	6	8	6	11'-4	6	9	6'-2	2'-5	3'-9	6	11'-4	8	6	11'-10	6	9	8'-4	2'-5	5'-11	6	11'-10	0.575	0.696	0.285	1.556	242.63
36-40	10	5	16.5	19	10.5	9	5	12	7'-10	4	6	20	4	12	9	4	10	6	4	12	11	4	11	6	8	6	11'-5	5	6	6'-1	2'-6	3'-7	5	11'-5	8	6	11'-11	5	6	8'-7	2'-7	6'-0	5	11'-11	0.635	0.757	0.301	1.693	240.71
41-45	10	5	17.5	20	11	6	4	6	8'-0	4	6	20	4	12	9	4	11	6	4	12	11	4	11	6	9	6	11'-6	6	9	6'-7	2'-7	4'-0	6	11'-6	9	6	12'-0	6	9	8'-9	2'-8	6'-1	6	12'-0	0.677	0.800	0.315	1.792	283.82
46-50	10	5	19	21	11.5	6	4	6	8'-3	4	6	20	4	12	9	4	11	6	4	12	11	4	11	6	9	6	11'-7	6	9	6'-10	2'-9	4'-1	6	11'-7	9	6	12'-1	6	9	8'-11	2'-9	6'-2	6	12'-1	0.738	0.845	0.329	1.912	287.39
51-55	10	5	20	22.5	12	6	4	6	8'-5	4	6	20	4	12	9	4	12	6	5	12	11	4	12	6	9	6	11'-8	6	9	7'-0	2'-10	4'-2	6	11'-8	9	6	12'-2	6	9	9'-3	2'-11	6'-4	6	12'-2	0.781	0.909	0.344	2.034	295.16

BENT BAR DETAIL

BARS	D
4	3
5	$3\frac{3}{4}$
6	$4\frac{1}{2}$
7	$5\frac{1}{4}$

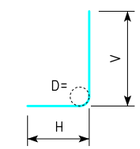

k2 & m2

NOTE:
ALL DIMENSIONS ARE OUT TO OUT.
D = PIN DIAMETER.

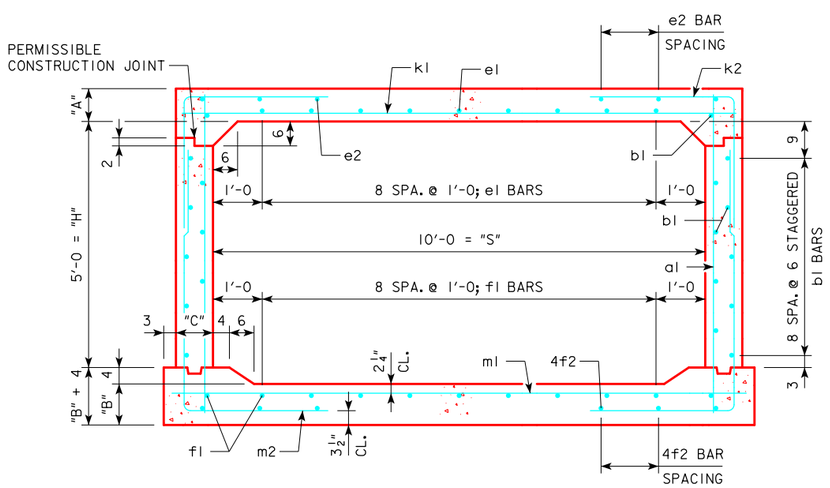

10 x 5 BARREL SECTION

NOTES:

1. DIMENSIONS LISTED ON THIS SHEET TO BE USED IN CONJUNCTION WITH SHEET RCB G2-12.
2. THE k2 AND m2 BARS HORIZONTAL LEGS MAY LAP IN LOW FILL SITUATIONS.
3. DIMENSIONS "A", "B", "C", "D", AND "SP." LISTED IN THE BAR LIST ARE IN INCHES.

LATEST REVISION DATE

APPROVED BY BRIDGE ENGINEER

IOWA DOT Highway Division

STANDARD DESIGN

SINGLE REINFORCED CONCRETE BOX CULVERTS

APRIL, 2012

CULVERT BARREL DETAILS

10 x 5 BARREL SECTIONS

RCB 10-5-12

ENGLISHLRFDSIGNEDSINGLECULVERTS.DGN - RCB 10-5-12 - THIS SHEET ISSUED 04-12.

VARIABLE DIMENSIONS AND QUANTITIES FOR 10 x 6 BARREL SECTIONS

DIMENSIONS							BAR LIST																																				QUANTITIES				
							a1			b1			e1			e2			f1			f2			k1			k2					k9		m1			m2					m9		CONCRETE (CY/FT)				STEEL
FILL	S	H	A	B	C	D	SIZE	SP.	L	SIZE	SP.	NO.	SIZE	SP.	NO.	SIZE	SP.	NO.	SIZE	SP.	NO.	SIZE	SP.	NO.	SIZE	SP.	L	SIZE	SP.	L	H	V	SIZE	L	SIZE	SP.	L	SIZE	SP.	L	H	V	SIZE	L	SLAB	FLOOR	WALLS	TOTAL	(LB/FT)
0	10	6	12	12	9	6	4	6	7'-11	4	6	24	4	12	9	4	13	8	4	12	11	4	13	8	5	6	11'-2	4	6	7'-0	3'-10	3'-2	4	11'-2	5	6	11'-8	4	6	10'-3	3'-10	6'-5	4	11'-8	0.458	0.481	0.313	1.252	156.63
1	10	6	12	12	9	6	4	6	7'-11	4	6	24	4	12	9	4	13	8	4	12	11	4	16	6	6	9	11'-2	4	6	7'-1	3'-11	3'-2	4	11'-2	5	6	11'-8	4	6	9'-9	3'-4	6'-5	4	11'-8	0.458	0.481	0.313	1.252	154.00
2	10	6	8	10	9	9	4	9	7'-5	4	6	24	5	12	9	4	16	6	4	12	11	4	16	6	6	6	11'-2	6	9	6'-6	3'-3	3'-3	6	11'-2	6	6	11'-8	6	9	9'-7	3'-4	6'-3	6	11'-8	0.316	0.407	0.313	1.036	192.42
3	10	6	8	10	9	9	4	9	7'-5	4	6	24	4	12	9	4	15	6	4	12	11	4	15	6	6	6	11'-2	6	9	6'-4	3'-2	3'-2	6	11'-2	6	6	11'-8	6	9	9'-4	3'-1	6'-3	6	11'-8	0.316	0.407	0.313	1.036	187.29
4-7	10	6	8	10	9	9	4	12	7'-5	4	6	24	4	12	9	4	14	6	4	12	11	4	14	6	6	6	11'-2	5	6	6'-0	3'-0	3'-0	5	11'-2	6	6	11'-8	5	6	9'-2	2'-11	6'-3	5	11'-8	0.316	0.407	0.313	1.036	182.05
8-10	10	6	8	10.5	9	9	4	12	7'-5	4	6	24	4	12	9	4	13	6	4	12	11	4	13	6	6	6	11'-2	5	6	5'-8	2'-10	2'-10	5	11'-2	7	6	11'-8	5	6	9'-1	2'-9	6'-4	5	11'-8	0.316	0.425	0.313	1.054	193.11
11-15	10	6	8.5	10.5	9	9	5	12	7'-6	4	6	24	4	12	9	4	13	6	4	12	11	4	12	6	7	6	11'-2	5	6	5'-8	2'-10	2'-10	5	11'-2	7	6	11'-8	5	6	8'-11	2'-7	6'-4	5	11'-8	0.334	0.425	0.313	1.072	210.55
16-20	10	6	10.5	12.5	9	6	4	6	7'-10	4	6	24	4	12	9	4	11	6	4	12	11	4	11	6	7	6	11'-2	6	9	5'-9	2'-5	3'-4	6	11'-2	8	6	11'-8	6	9	8'-11	2'-5	6'-6	6	11'-8	0.405	0.500	0.313	1.218	230.63
21-25	10	6	12	14	9	6	4	6	8'-1	4	6	24	4	12	9	4	10	6	4	12	11	4	10	6	8	6	11'-2	6	9	5'-9	2'-3	3'-6	6	11'-2	8	6	11'-8	6	9	8'-11	2'-4	6'-7	6	11'-8	0.458	0.555	0.313	1.326	245.50
26-30	10	6	14	16	9	9	4	9	8'-5	4	6	24	4	12	9	4	10	6	4	12	11	4	10	6	8	6	11'-2	6	9	6'-0	2'-4	3'-8	6	11'-2	8	6	11'-8	6	9	9'-1	2'-4	6'-9	6	11'-8	0.529	0.629	0.313	1.471	240.71
31-35	10	6	15	17.5	10	6	4	6	8'-7	4	6	24	4	12	9	4	11	6	4	12	11	4	11	6	8	6	11'-4	6	9	6'-3	2'-6	3'-9	6	11'-4	8	6	11'-10	6	9	9'-5	2'-6	6'-11	6	11'-10	0.575	0.696	0.347	1.618	252.84
36-40	10	6	16.5	19	10.5	6	4	6	8'-10	4	6	24	4	12	9	4	11	6	4	12	11	4	11	6	8	6	11'-5	6	9	6'-6	2'-7	3'-11	6	11'-5	8	6	11'-11	6	9	9'-8	2'-8	7'-0	6	11'-11	0.635	0.757	0.366	1.758	256.50
41-45	10	6	17.5	20	11	6	4	6	9'-0	4	6	24	4	12	9	4	11	6	4	12	11	4	12	6	9	6	11'-6	6	9	6'-8	2'-8	4'-0	6	11'-6	9	6	12'-0	6	9	9'-10	2'-9	7'-1	6	12'-0	0.677	0.800	0.383	1.860	294.05
46-50	10	6	19	21	11.5	6	4	6	9'-3	4	6	24	4	12	9	4	12	6	4	12	11	4	12	6	9	6	11'-7	6	9	6'-11	2'-10	4'-1	6	11'-7	9	6	12'-1	6	9	10'-0	2'-10	7'-2	6	12'-1	0.738	0.845	0.400	1.983	297.58
51-55	10	6	20	22.5	12	6	4	6	9'-5	4	6	24	4	12	9	4	12	6	5	12	11	4	13	6	9	6	11'-8	6	9	7'-1	2'-11	4'-2	6	11'-8	9	6	12'-2	6	9	10'-4	3'-0	7'-4	6	12'-2	0.781	0.909	0.418	2.108	305.37

BENT BAR DETAIL

BARS	D
4	3
5	$3\frac{3}{4}$
6	$4\frac{1}{2}$

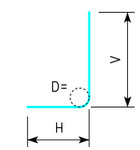

k2 & m2

NOTE:
ALL DIMENSIONS ARE OUT TO OUT.
D = PIN DIAMETER.

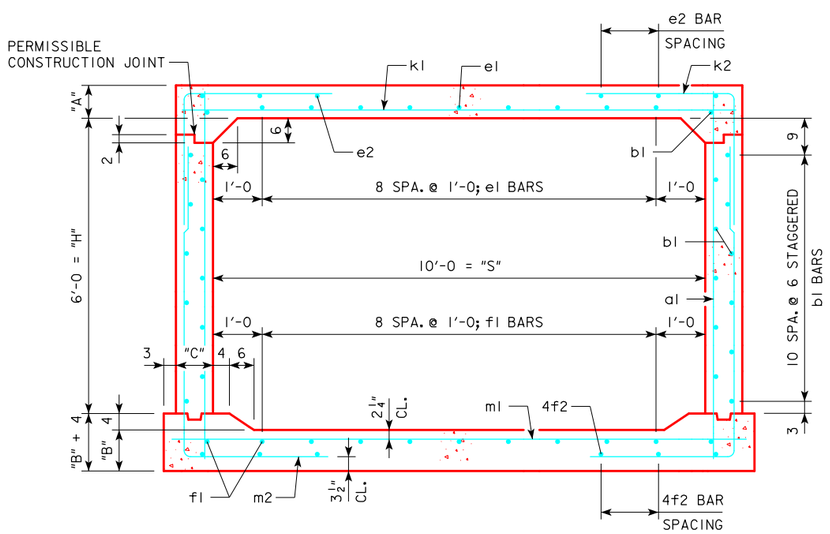

10 x 6 BARREL SECTION

NOTES:

1. DIMENSIONS LISTED ON THIS SHEET TO BE USED IN CONJUNCTION WITH SHEET RCB G2-12.
2. THE k2 AND m2 BARS HORIZONTAL LEGS MAY LAP IN LOW FILL SITUATIONS.
3. DIMENSIONS "A", "B", "C", "D", AND "SP." LISTED IN THE BAR LIST ARE IN INCHES.

LATEST REVISION DATE

APPROVED BY BRIDGE ENGINEER

IOWA DOT Highway Division

STANDARD DESIGN

SINGLE REINFORCED CONCRETE BOX CULVERTS

APRIL, 2012

CULVERT BARREL DETAILS

10 x 6 BARREL SECTIONS

RCB 10-6-12

ENGLISHLRFDSIGNEDSINGLECULVERTS.DGN - RCB 10-6-12 - THIS SHEET ISSUED 04-12.

VARIABLE DIMENSIONS AND QUANTITIES FOR 10 x 7 BARREL SECTIONS

DIMENSIONS							BAR LIST																																				QUANTITIES				
							a1			b1			e1			e2			f1			f2			k1			k2					k9		m1			m2					m9		CONCRETE (CY/FT)				STEEL
FILL	S	H	A	B	C	D	SIZE	SP.	L	SIZE	SP.	NO.	SIZE	SP.	NO.	SIZE	SP.	NO.	SIZE	SP.	NO.	SIZE	SP.	NO.	SIZE	SP.	L	SIZE	SP.	L	H	V	SIZE	L	SIZE	SP.	L	SIZE	SP.	L	H	V	SIZE	L	SLAB	FLOOR	WALLS	TOTAL	(LB/FT)
0	10	7	12	12	9	6	4	6	8'-11	4	6	28	4	12	9	4	14	10	4	12	11	4	13	8	5	6	11'-2	5	9	8'-6	5'-4	3'-2	5	11'-2	7	9	11'-8	5	9	11'-5	4'-0	7'-5	5	11'-8	0.458	0.481	0.368	1.307	183.58
1	10	7	12	12	9	6	4	6	8'-11	4	6	28	4	12	9	4	17	8	4	12	11	4	13	8	5	6	11'-2	4	6	9'-1	5'-11	3'-2	--	--	5	6	11'-8	4	6	11'-4	3'-11	7'-5	4	11'-8	0.458	0.481	0.368	1.307	170.13
2	10	7	8	10	9	9	4	9	8'-5	4	6	28	5	12	9	4	12	8	4	12	11	4	18	6	6	6	11'-2	6	9	6'-10	3'-8	3'-2	6	11'-2	6	6	11'-8	6	9	10'-10	3'-7	7'-3	6	11'-8	0.316	0.407	0.368	1.091	204.82
3	10	7	8	10	9	9	4	12	8'-5	4	6	28	4	12	9	4	16	6	4	12	11	4	15	6	6	6	11'-2	5	6	6'-1	3'-3	2'-10	5	11'-2	6	6	11'-8	5	6	10'-5	3'-2	7'-3	5	11'-8	0.316	0.407	0.368	1.091	191.74
4-8	10	7	8	10	9	9	4	12	8'-5	4	6	28	4	12	9	4	15	6	4	12	11	4	15	6	6	6	11'-2	5	6	6'-2	3'-1	3'-1	5	11'-2	6	6	11'-8	5	6	10'-4	3'-1	7'-3	5	11'-8	0.316	0.407	0.368	1.091	191.76
9-10	10	7	8.5	10.5	9	9	4	12	8'-6	4	6	28	4	12	9	4	13	6	4	12	11	4	13	6	6	6	11'-2	5	6	5'-8	2'-10	2'-10	5	11'-2	7	6	11'-8	5	6	10'-2	2'-10	7'-4	5	11'-8	0.334	0.425	0.368	1.127	201.84
11-15	10	7	8.5	10.5	9	9	5	12	8'-6	4	6	28	4	12	9	4	13	6	4	12	11	4	12	6	7	6	11'-2	5	6	5'-8	2'-10	2'-10	5	11'-2	7	6	11'-8	5	6	10'-0	2'-8	7'-4	5	11'-8	0.334	0.425	0.368	1.127	219.95
16-20	10	7	10.5	12.5	9	6	4	6	8'-10	4	6	28	4	12	9	4	11	6	4	12	11	4	11	6	9	9	11'-2	6	9	5'-10	2'-6	3'-4	6	11'-2	8	6	11'-8	6	9	10'-0	2'-6	7'-6	6	11'-8	0.405	0.500	0.368	1.273	247.58
21-25	10	7	12.5	14.5	9	6	4	6	9'-2	4	6	28	4	12	9	4	11	6	4	12	11	4	11	6	8	6	11'-2	6	9	5'-11	2'-5	3'-6	6	11'-2	8	6	11'-8	6	9	10'-2	2'-6	7'-8	6	11'-8	0.476	0.574	0.368	1.418	257.00
26-30	10	7	14	16	9.5	9	5	12	9'-5	4	6	28	4	12	9	4	11	6	4	12	11	4	11	6	8	6	11'-3	5	6	5'-10	2'-6	3'-4	5	11'-3	8	6	11'-9	5	6	10'-4	2'-7	7'-9	5	11'-9	0.534	0.634	0.389	1.557	253.95
31-35	10	7	15	17.5	10	6	4	6	9'-7	4	6	28	4	12	9	4	12	6	4	12	11	4	12	6	8	6	11'-4	6	9	6'-5	2'-8	3'-9	6	11'-4	8	6	11'-10	6	9	10'-7	2'-8	7'-11	6	11'-10	0.575	0.696	0.409	1.680	263.76
36-40	10	7	16.5	19	11	6	4	6	9'-10	4	6	28	4	12	9	4	12	6	4	12	11	4	12	6	8	6	11'-6	6	9	6'-9	2'-10	3'-11	6	11'-6	8	6	12'-0	6	9	10'-10	2'-10	8'-0	6	12'-0	0.640	0.762	0.451	1.853	268.68
41-45	10	7	17.5	20	11.5	9	6	9	10'-0	4	6	28	4	12	9	4	12	6	4	12	11	4	13	6	9	6	11'-7	6	9	6'-11	2'-11	4'-0	6	11'-7	9	6	12'-1	6	9	11'-1	3'-0	8'-1	6	12'-1	0.682	0.807	0.471	1.960	320.39
46-50	10	7	19	21.5	12	9	6	12	10'-3	4	6	28	4	12	9	4	13	6	4	12	11	4	13	6	9	6	11'-8	6	9	7'-1	3'-0	4'-1	6	11'-8	9	6	12'-2	6	9	11'-4	3'-1	8'-3	6	12'-2	0.744	0.871	0.492	2.107	314.58
51-55	10	7	20	22.5	13	9	6	9	10'-5	4	6	28	4	12	9	4	13	6	5	12	11	4	14	6	9	6	11'-10	6	9	7'-4	3'-2	4'-2	6	11'-10	9	6	12'-4	6	9	11'-7	3'-3	8'-4	6	12'-4	0.794	0.923	0.532	2.249	333.50

BENT BAR DETAIL

BARS	D
4	3
5	$3\frac{3}{4}$
6	$4\frac{1}{2}$

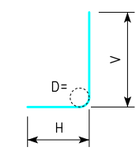

k2 & m2

NOTE:
ALL DIMENSIONS ARE OUT TO OUT.
D = PIN DIAMETER.

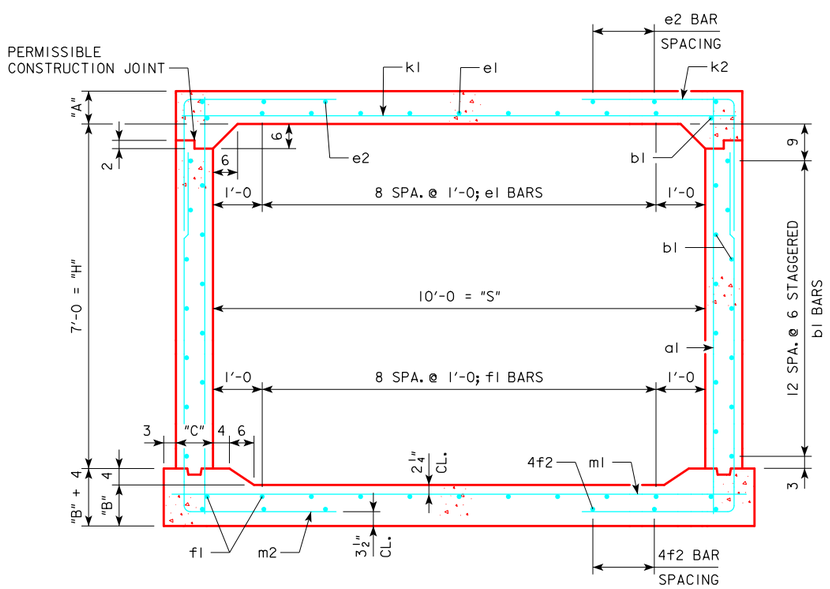

10 x 7 BARREL SECTION

NOTES:

1. DIMENSIONS LISTED ON THIS SHEET TO BE USED IN CONJUNCTION WITH SHEET RCB G2-12.
2. THE k2 AND m2 BARS HORIZONTAL LEGS MAY LAP IN LOW FILL SITUATIONS.
3. DIMENSIONS "A", "B", "C", "D", AND "SP." LISTED IN THE BAR LIST ARE IN INCHES.

LATEST REVISION DATE

APPROVED BY BRIDGE ENGINEER

IOWA DOT Highway Division

STANDARD DESIGN

SINGLE REINFORCED CONCRETE BOX CULVERTS

APRIL, 2012

CULVERT BARREL DETAILS

10 x 7 BARREL SECTIONS

RCB 10-7-12

ENGLISHLRFDSIGNEDSINGLECULVERTS.DGN - RCB 10-7-12 - THIS SHEET ISSUED 04-12.

VARIABLE DIMENSIONS AND QUANTITIES FOR 10 x 8 BARREL SECTIONS

DIMENSIONS							BAR LIST																																				QUANTITIES				
							a1			b1			e1			e2			f1			f2			k1			k2					k9		m1			m2					m9		CONCRETE (CY/FT)				STEEL
FILL	S	H	A	B	C	D	SIZE	SP.	L	SIZE	SP.	NO.	SIZE	SP.	NO.	SIZE	SP.	NO.	SIZE	SP.	NO.	SIZE	SP.	NO.	SIZE	SP.	L	SIZE	SP.	L	H	V	SIZE	L	SIZE	SP.	L	SIZE	SP.	L	H	V	SIZE	L	SLAB	FLOOR	WALLS	TOTAL	(LB/FT)
0	10	8	12.5	12.5	9	6	4	6	10'-0	4	6	32	4	12	9	4	17	8	4	12	11	4	16	8	5	6	11'-2	4	6	9'-8	6'-6	3'-2	--	--	7	9	11'-8	4	6	13'-3	4'-9	8'-6	4	11'-8	0.476	0.500	0.424	1.400	191.03
1	10	8	12	12	9	9	4	12	9'-11	4	6	32	4	12	9	4	17	8	4	12	11	4	17	8	5	6	11'-2	6	12	10'-2	6'-8	3'-6	--	--	7	9	11'-8	7	12	13'-5	5'-0	8'-5	7	11'-8	0.458	0.481	0.424	1.363	208.87
2-3	10	8	8	10	9	9	4	9	9'-5	4	6	32	4	12	9	4	15	8	4	12	11	4	13	8	6	6	11'-2	6	9	7'-6	4'-4	3'-2	6	11'-2	6	6	11'-8	6	9	12'-2	3'-11	8'-3	6	11'-8	0.316	0.407	0.424	1.147	215.58
4-6	10	8	8	10	9	9	4	12	9'-5	4	6	32	4	12	9	4	17	6	4	12	11	4	16	6	6	6	11'-2	5	6	6'-3	3'-5	2'-10	5	11'-2	6	6	11'-8	5	6	11'-7	3'-4	8'-3	5	11'-8	0.316	0.407	0.424	1.147	201.39
7-8	10	8	8	10.5	9	9	4	12	9'-5	4	6	32	4	12	9	4	14	6	4	12	11	4	14	6	6	6	11'-2	5	6	6'-0	3'-0	3'-0	5	11'-2	6	6	11'-8	5	6	11'-4	3'-0	8'-4	5	11'-8	0.316	0.425	0.424	1.165	199.26
9-10	10	8	8.5	10.5	9	9	4	9	9'-6	4	6	32	4	12	9	4	15	6	4	12	11	4	15	6	8	9	11'-2	6	9	6'-4	3'-2	3'-2	6	11'-2	7	6	11'-8	6	9	11'-5	3'-1	8'-4	6	11'-8	0.334	0.425	0.424	1.183	225.47
11-15	10	8	9	11	9	6	4	6	9'-7	4	6	32	4	12	9	4	13	6	4	12	11	4	13	6	7	6	11'-2	6	9	6'-1	2'-10	3'-3	6	11'-2	7	6	11'-8	6	9	11'-2	2'-10	8'-4	6	11'-8	0.352	0.444	0.424	1.220	236.63
16-20	10	8	10.5	12.5	9	6	4	6	9'-10	4	6	32	4	12	9	4	12	6	4	12	11	4	12	6	8	6	11'-2	5	6	5'-7	2'-7	3'-0	5	11'-2	8	6	11'-8	5	6	11'-2	2'-8	8'-6	5	11'-8	0.405	0.500	0.424	1.329	264.24
21-25	10	8	12	14.5	9.5	9	6	12	10'-1	4	6	32	4	12	9	4	12	6	4	12	11	4	12	6	8	6	11'-3	6	9	6'-2	2'-8	3'-6	6	11'-3	8	6	11'-9	6	9	11'-5	2'-9	8'-8	6	11'-9	0.463	0.578	0.447	1.488	273.39
26-30	10	8	14	16.5	10.5	9	6	12	10'-5	4	6	32	4	12	9	4	12	6	4	12	11	4	13	6	8	6	11'-5	6	9	6'-6	2'-10	3'-8	6	11'-5	8	6	11'-11	6	9	11'-9	2'-11	8'-10	6	11'-11	0.544	0.662	0.496	1.702	279.03
31-35	10	8	15	17.5	11.5	9	4	12	10'-7	4	6	32	4	12	9	4	13	6	4	12	11	4	13	6	8	6	11'-7	7	9	7'-3	3'-0	4'-3	7	11'-7	8	6	12'-1	7	9	12'-0	3'-1	8'-11	7	12'-1	0.591	0.711	0.542	1.844	297.18
36-40	10	8	16.5	19	12.5	9	6	9	10'-10	4	6	32	4	12	9	4	13	6	4	12	11	4	14	6	8	6	11'-9	7	9	7'-7	3'-2	4'-5	7	11'-9	8	6	12'-3	6	9	12'-3	3'-3	9'-0	6	12'-3	0.657	0.780	0.589	2.026	312.68
41-45	10	8	18	20.5	13.5	9	4	9	11'-1	4	6	32	4	12	9	4	14	6	4	12	11	4	14	6	8	6	11'-11	7	9	7'-10	3'-4	4'-6	7	11'-11	8	6	12'-5	7	9	12'-7	3'-5	9'-2	7	12'-5	0.725	0.851	0.636	2.212	312.92
46-50	10	8	19	21.5	14	9	4	12	11'-3	4	6	32	4	12	9	4	14	6	4	12	11	4	15	6	9	6	12'-0	6	6	7'-6	3'-5	4'-1	6	12'-0	9	6	12'-6	6	6	12'-9	3'-6	9'-3	6	12'-6	0.769	0.897	0.659	2.325	351.79
51-55	10	8	20	22.5	15	9	5	12	11'-5	4	6	32	4	12	9	4	15	6	5	12	11	4	15	6	9	6	12'-2	7	9	8'-3	3'-7	4'-8	7	12'-2	9	6	12'-8	7	9	13'-0	3'-8	9'-4	7	12'-8	0.819	0.950	0.706	2.475	365.82

BENT BAR DETAIL

BARS	D
4	3
5	$3\frac{3}{4}$
6	$4\frac{1}{2}$
7	$5\frac{1}{4}$

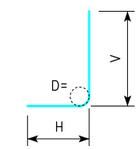

k2 & m2

NOTE:
ALL DIMENSIONS ARE OUT TO OUT.
D = PIN DIAMETER.

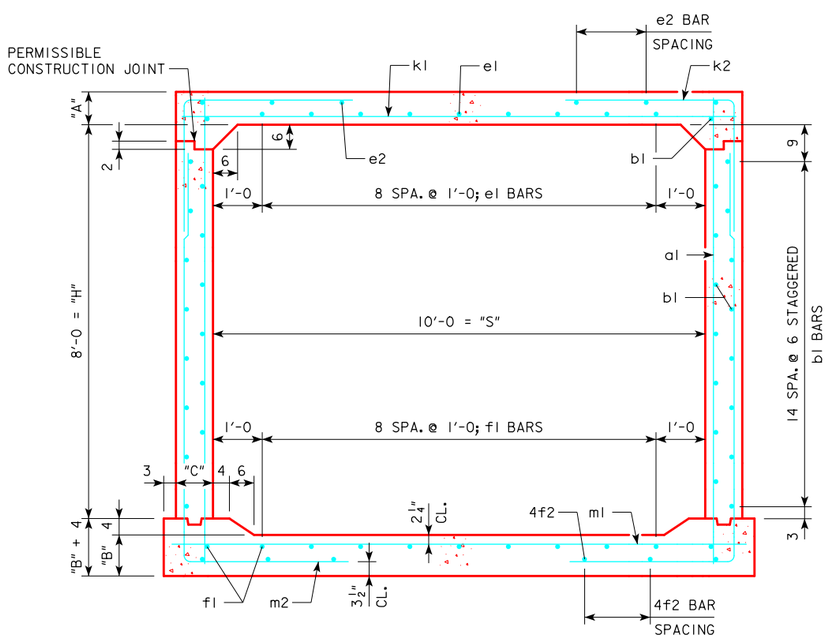

10 x 8 BARREL SECTION

NOTES:

1. DIMENSIONS LISTED ON THIS SHEET TO BE USED IN CONJUNCTION WITH SHEET RCB G2-12.
2. THE k2 AND m2 BARS HORIZONTAL LEGS MAY LAP IN LOW FILL SITUATIONS.
3. DIMENSIONS "A", "B", "C", "D", AND "SP." LISTED IN THE BAR LIST ARE IN INCHES.

LATEST REVISION DATE

APPROVED BY BRIDGE ENGINEER

IOWA DOT Highway Division

STANDARD DESIGN

SINGLE REINFORCED CONCRETE BOX CULVERTS

APRIL, 2012

CULVERT BARREL DETAILS

10 x 8 BARREL SECTIONS

RCB 10-8-12

ENGLISHLRFDSIGNEDSINGLECULVERTS.DGN - RCB 10-8-12 - THIS SHEET ISSUED 04-12.

VARIABLE DIMENSIONS AND QUANTITIES FOR 10 x 9 BARREL SECTIONS

DIMENSIONS							BAR LIST																																				QUANTITIES				
							a1			b1			e1			e2			f1			f2			k1			k2					k9		m1			m2					m9		CONCRETE (CY/FT)				STEEL
FILL	S	H	A	B	C	D	SIZE	SP.	L	SIZE	SP.	NO.	SIZE	SP.	NO.	SIZE	SP.	NO.	SIZE	SP.	NO.	SIZE	SP.	NO.	SIZE	SP.	L	SIZE	SP.	L	H	V	SIZE	L	SIZE	SP.	L	SIZE	SP.	L	H	V	SIZE	L	SLAB	FLOOR	WALLS	TOTAL	(LB/FT)
0	10	9	12.5	12.5	9	6	4	6	11'-0	4	6	36	5	12	9	4	17	8	4	12	11	4	17	8	7	9	11'-2	5	9	9'-8	6'-6	3'-2	--	--	7	9	11'-8	5	9	16'-0	6'-6	9'-6	--	--	0.476	0.500	0.479	1.455	220.21
1	10	9	12	12.5	9	6	4	6	10'-11	4	6	36	5	12	9	4	17	8	4	12	11	4	17	8	8	12	11'-2	5	9	9'-8	6'-6	3'-2	--	--	7	9	11'-8	5	9	16'-0	6'-6	9'-6	--	--	0.458	0.500	0.479	1.437	220.29
2-3	10	9	8	10	9	9	4	9	10'-5	4	6	36	4	12	9	4	17	8	4	12	11	4	16	8	8	9	11'-2	6	9	9'-10	6'-8	3'-2	--	--	6	6	11'-8	6	9	13'-11	4'-8	9'-3	6	11'-8	0.316	0.407	0.479	1.202	243.87
4-5	10	9	8	10	9	9	4	12	10'-5	4	6	36	4	12	9	4	13	8	4	12	11	4	12	8	6	6	11'-2	5	6	6'-9	3'-11	2'-10	5	11'-2	6	6	11'-8	5	6	13'-0	3'-9	9'-3	5	11'-8	0.316	0.407	0.479	1.202	216.13
6-8	10	9	8	10.5	9	9	4	9	10'-5	4	6	36	4	12	9	4	18	6	4	12	11	4	18	6	6	6	11'-2	6	9	6'-9	3'-7	3'-2	6	11'-2	7	6	11'-8	6	9	12'-11	3'-7	9'-4	6	11'-8	0.316	0.425	0.479	1.220	230.21
9-10	10	9	8.5	10.5	9	9	5	12	10'-6	4	6	36	4	12	9	4	16	6	4	12	11	4	16	6	8	9	11'-2	6	9	6'-6	3'-3	3'-3	6	11'-2	7	6	11'-8	6	9	12'-7	3'-3	9'-4	6	11'-8	0.334	0.425	0.479	1.238	239.16
11-15	10	9	9	11	9	9	5	12	10'-7	4	6	36	4	12	9	4	14	6	4	12	11	4	14	6	7	6	11'-2	5	6	5'-10	2'-11	2'-11	5	11'-2	7	6	11'-8	5	6	12'-3	2'-11	9'-4	5	11'-8	0.352	0.444	0.479	1.275	239.92
16-20	10	9	10.5	13	9.5	6	4	6	10'-10	4	6	36	4	12	9	4	14	6	4	12	11	4	13	6	7	6	11'-3	5	6	6'-2	3'-1	3'-1	5	11'-3	8	6	11'-9	5	6	12'-5	2'-11	9'-6	5	11'-9	0.409	0.522	0.506	1.437	263.97
21-25	10	9	12.5	14.5	11	9	6	9	11'-2	4	6	36	4	12	9	4	14	6	4	12	11	4	14	6	9	9	11'-6	5	6	6'-4	3'-2	3'-2	5	11'-6	8	6	12'-0	5	6	12'-9	3'-1	9'-8	5	12'-0	0.494	0.591	0.587	1.672	291.45
26-30	10	9	14	16.5	12	9	4	12	11'-5	4	6	36	4	12	9	4	14	6	4	12	11	4	14	6	9	9	11'-8	7	9	7'-4	3'-2	4'-2	7	11'-8	8	6	12'-2	7	9	13'-1	3'-3	9'-10	7	12'-2	0.559	0.678	0.640	1.877	300.82
31-35	10	9	15	18	13	9	4	9	11'-8	4	6	36	4	12	9	4	14	6	4	12	11	4	15	6	8	6	11'-10	7	9	7'-8	3'-4	4'-4	7	11'-10	8	6	12'-4	7	9	13'-4	3'-5	9'-11	7	12'-4	0.606	0.747	0.693	2.046	319.03
36-40	10	9	16.5	19	14	9	4	12	11'-10	4	6	36	4	12	9	4	15	6	4	12	11	4	15	6	8	6	12'-0	6	6	7'-5	3'-6	3'-11	6	12'-0	8	6	12'-6	6	6	13'-7	3'-7	10'-0	6	12'-6	0.673	0.798	0.746	2.217	323.61
41-45	10	9	17.5	20.5	15	6	4	6	12'-1	4	6	36	4	12	9	4	15	6	4	12	11	4	16	6	8	6	12'-2	7	9	8'-1	3'-7	4'-6	7	12'-2	8	6	12'-8	7	9	13'-11	3'-9	10'-2	7	12'-8	0.723	0.870	0.799	2.392	339.76
46-50	10	9	19	21.5	15.5	9	4	9	12'-3	4	6	36	4	12	9	4	15	6	4	12	11	4	16	6	8	6	12'-3	6	6	7'-10	3'-9	4'-1	6	12'-3	9	6	12'-9	6	6	14'-1	3'-10	10'-3	6	12'-9	0.787	0.917	0.825	2.529	356.50
51-55	10	9	20	22.5	16.5	9	5	12	12'-5	4	6	36	4	12	9	4	17	6	5	12	11	4	16	6	9	6	12'-5	6	6	8'-4	4'-2	4'-2	6	12'-5	9	6	12'-11	6	6	14'-4	4'-0	10'-4	6	12'-11	0.839	0.971	0.878	2.688	390.21

BENT BAR DETAIL

BARS	D
5	$3\frac{3}{4}$
6	$4\frac{1}{2}$
7	$5\frac{1}{4}$

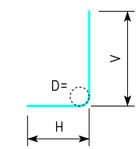

k2 & m2

NOTE:
ALL DIMENSIONS ARE OUT TO OUT.
D = PIN DIAMETER.

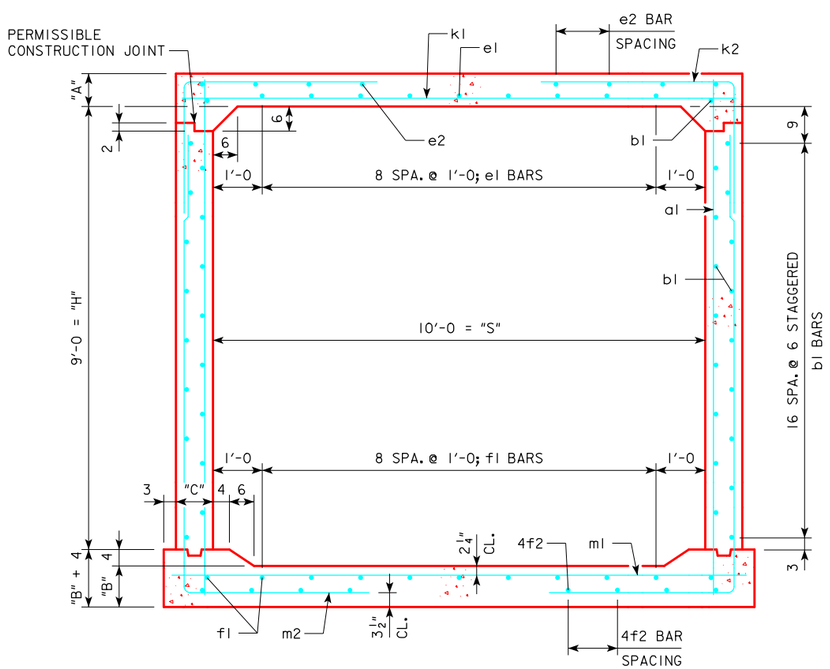

10 x 9 BARREL SECTION

NOTES:

1. DIMENSIONS LISTED ON THIS SHEET TO BE USED IN CONJUNCTION WITH SHEET RCB G2-12.
2. THE K2 AND m2 BARS HORIZONTAL LEGS MAY LAP IN LOW FILL SITUATIONS.
3. DIMENSIONS "A", "B", "C", "D", AND "SP." LISTED IN THE BAR LIST ARE IN INCHES.

LATEST REVISION DATE

APPROVED BY BRIDGE ENGINEER

IOWA DOT Highway Division

STANDARD DESIGN

SINGLE REINFORCED CONCRETE BOX CULVERTS

APRIL, 2012

CULVERT BARREL DETAILS

10 x 9 BARREL SECTIONS

RCB 10-9-12

ENGLISHLRFDSIGNEDSINGLECULVERTS.DGN - RCB 10-9-12 - THIS SHEET ISSUED 04-12.

VARIABLE DIMENSIONS AND QUANTITIES FOR 10 x 10 BARREL SECTIONS

DIMENSIONS							BAR LIST																																				QUANTITIES				
							a1			b1			e1			e2			f1			f2			k1			k2					k9		m1			m2					m9		CONCRETE (CY/FT)				STEEL
FILL	S	H	A	B	C	D	SIZE	SP.	L	SIZE	SP.	NO.	SIZE	SP.	NO.	SIZE	SP.	NO.	SIZE	SP.	NO.	SIZE	SP.	NO.	SIZE	SP.	L	SIZE	SP.	L	H	V	SIZE	L	SIZE	SP.	L	SIZE	SP.	L	H	V	SIZE	L	SLAB	FLOOR	WALLS	TOTAL	(LB/FT)
0	10	10	12.5	12.5	10	9	4	12	12'-0	4	6	40	4	12	9	4	17	8	4	12	11	4	17	8	5	6	11'-4	5	6	9'-9	6'-7	3'-2	--	--	7	9	11'-10	5	6	17'-1	6'-7	10'-6	--	--	0.485	0.508	0.594	1.587	237.84
1	10	10	12	12.5	10	9	4	12	11'-11	4	6	40	4	12	9	4	17	8	4	12	11	4	17	8	5	6	11'-4	5	6	9'-9	6'-7	3'-2	--	--	7	9	11'-10	5	6	17'-1	6'-7	10'-6	--	--	0.467	0.508	0.594	1.569	237.74
2	10	10	8	10	10	9	4	9	11'-5	4	6	40	5	12	9	4	17	8	4	12	11	4	17	8	6	6	11'-4	6	9	9'-11	6'-9	3'-2	--	--	6	6	11'-10	6	9	15'-3	5'-0	10'-3	6	11'-10	0.323	0.414	0.594	1.331	251.05
3	10	10	8	10.5	10	9	4	9	11'-5	4	6	40	4	12	9	4	13	10	4	12	11	4	16	8	6	6	11'-4	6	9	8'-5	5'-3	3'-2	6	11'-4	6	6	11'-10	6	9	15'-1	4'-9	10'-4	6	11'-10	0.323	0.433	0.594	1.350	242.92
4-7	10	10	8	10	10	9	4	12	11'-5	4	6	40	4	12	9	4	15	8	4	12	11	4	13	8	6	6	11'-4	5	6	7'-3	4'-5	2'-10	5	11'-4	6	6	11'-10	5	6	14'-4	4'-1	10'-3	5	11'-10	0.323	0.414	0.594	1.331	229.00
8-10	10	10	8	10.5	10	9	4	9	11'-5	4	6	40	4	12	9	4	18	6	4	12	11	4	18	6	6	6	11'-4	5	6	6'-6	3'-8	2'-10	5	11'-4	7	6	11'-10	5	6	14'-0	3'-8	10'-4	5	11'-10	0.323	0.433	0.594	1.350	239.58
11-15	10	10	9	11	10	9	4	12	11'-7	4	6	40	4	12	9	4	16	6	4	12	11	4	16	6	7	6	11'-4	7	9	7'-3	3'-5	3'-10	7	11'-4	7	6	11'-10	7	9	13'-9	3'-5	10'-4	7	11'-10	0.359	0.452	0.594	1.405	281.71
16-20	10	10	10.5	12.5	11	9	4	12	11'-10	4	6	40	4	12	9	4	15	6	4	12	11	4	15	6	7	6	11'-6	6	6	6'-8	3'-4	3'-4	6	11'-6	8	6	12'-0	6	6	13'-9	3'-3	10'-6	6	12'-0	0.421	0.515	0.655	1.591	302.58
21-25	10	10	12.5	14.5	12	9	4	12	12'-2	4	6	40	4	12	9	4	15	6	4	12	11	4	15	6	7	6	11'-8	7	9	7'-5	3'-4	4'-1	7	11'-8	8	6	12'-2	7	9	14'-1	3'-5	10'-8	7	12'-2	0.503	0.601	0.714	1.818	303.63
26-30	10	10	14	16.5	13	9	4	9	12'-5	4	6	40	4	12	9	4	15	6	4	12	11	4	16	6	9	9	11'-10	7	9	7'-8	3'-6	4'-2	7	11'-10	8	6	12'-4	7	9	14'-5	3'-7	10'-10	7	12'-4	0.568	0.688	0.773	2.029	321.26
31-35	10	10	15	18	14.5	9	4	9	12'-8	4	6	40	4	12	9	4	16	6	4	12	11	4	16	6	9	9	12'-1	6	6	7'-6	3'-9	3'-9	6	12'-1	8	6	12'-7	6	6	14'-8	3'-9	10'-11	6	12'-7	0.621	0.764	0.862	2.247	332.63
36-40	10	10	16.5	19	15.5	9	4	9	12'-10	4	6	40	4	12	9	4	16	6	4	12	11	4	16	6	8	6	12'-3	6	6	7'-10	3'-11	3'-11	6	12'-3	8	6	12'-9	6	6	14'-11	3'-11	11'-0	6	12'-9	0.690	0.816	0.921	2.427	346.34
41-45	10	10	17.5	20.5	16.5	9	5	12	13'-1	4	6	40	4	12	9	4	16	6	4	12	11	4	17	6	8	6	12'-5	6	6	7'-10	3'-11	3'-11	6	12'-5	8	6	12'-11	6	6	15'-3	4'-1	11'-2	6	12'-11	0.740	0.889	0.980	2.609	355.24
46-50	10	10	19	21.5	17	9	6	9	13'-3	4	6	40	4	12	9	4	17	6	4	12	11	4	17	6	8	6	12'-6	7	9	8'-8	4'-1	4'-7	7	12'-6	8	6	13'-0	7	9	15'-5	4'-2	11'-3	7	13'-0	0.806	0.936	1.010	2.752	379.11
51-55	10	10	20	22.5	18	6	4	6	13'-5	4	6	40	4	12	9	4	17	6	5	12	11	4	17	6	9	6	12'-8	6	6	8'-4	4'-2	4'-2	6	12'-8	9	6	13'-2	6	6	15'-7	4'-3	11'-4	6	13'-2	0.858	0.991	1.069	2.918	413.21

BENT BAR DETAIL

BARS	D
5	$3\frac{3}{4}$
6	$4\frac{1}{2}$
7	$5\frac{1}{4}$

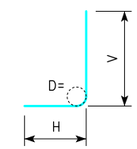

k2 & m2

NOTE:
ALL DIMENSIONS ARE OUT TO OUT.
D = PIN DIAMETER.

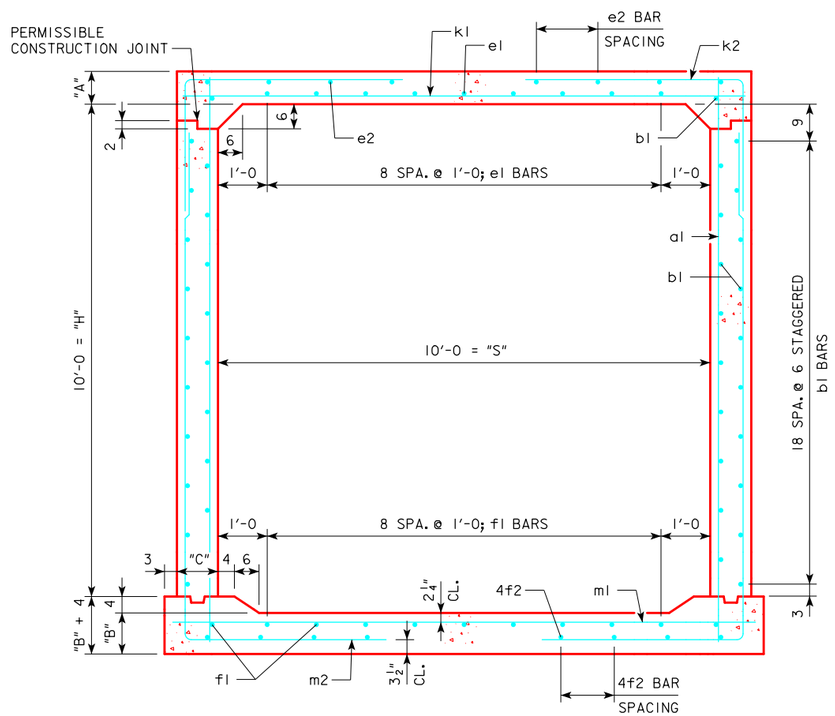

10 x 10 BARREL SECTION

NOTES:

1. DIMENSIONS LISTED ON THIS SHEET TO BE USED IN CONJUNCTION WITH SHEET RCB G2-12.
2. THE k2 AND m2 BARS HORIZONTAL LEGS MAY LAP IN LOW FILL SITUATIONS.
3. DIMENSIONS "A", "B", "C", "D", AND "SP." LISTED IN THE BAR LIST ARE IN INCHES.

LATEST REVISION DATE

APPROVED BY BRIDGE ENGINEER

IOWA DOT Highway Division

STANDARD DESIGN

SINGLE REINFORCED CONCRETE BOX CULVERTS

APRIL, 2012

CULVERT BARREL DETAILS

10 x 10 BARREL SECTIONS

RCB 10-10-12

ENGLISHLRFDSIGNEDSINGLECULVERTS.DGN - RCB 10-10-12 - THIS SHEET ISSUED 04-12.

VARIABLE DIMENSIONS AND QUANTITIES FOR 10 x 11 BARREL SECTIONS

DIMENSIONS							BAR LIST																																			QUANTITIES				
							a1			b1			e1			e2			f1			f2			k1			k2					k9		m1			m2					m9		CONCRETE (CY/FT)				STEEL
FILL	S	H	A	B	C	D	SIZE	SP.	L	SIZE	SP.	NO.	SIZE	SP.	NO.	SIZE	SP.	NO.	SIZE	SP.	NO.	SIZE	SP.	NO.	SIZE	SP.	L	SIZE	SP.	L	H	V	SIZE	L	SIZE	SP.	L	SIZE	SP.	L	H	V	SIZE	L	SLAB	FLOOR	WALLS	TOTAL	(LB/FT)
0	10	11	12	12.5	11	9	4	12	12'-11	4	6	44	4	12	9	4	17	8	4	12	11	4	17	8	5	6	11'-6	6	9	10'-4	6'-10	3'-6	--	--	7	9	12'-0	6	9	18'-4	6'-10	11'-6	--	--	0.476	0.515	0.723	1.714	249.29
1	10	11	12	12.5	11	9	4	12	12'-11	4	6	44	4	12	9	4	17	8	4	12	11	4	17	8	5	6	11'-6	6	9	10'-4	6'-10	3'-6	--	--	7	9	12'-0	6	9	18'-4	6'-10	11'-6	--	--	0.476	0.515	0.723	1.714	249.29
2	10	11	8	10	11	9	4	9	12'-5	4	6	44	5	12	9	4	17	8	4	12	11	4	17	8	6	6	11'-6	5	6	9'-6	6'-8	2'-10	--	--	6	6	12'-0	5	6	16'-5	5'-2	11'-3	5	12'-0	0.330	0.420	0.723	1.473	260.32
3-6	10	11	8	10	11	9	4	9	12'-5	4	6	44	4	12	9	4	17	8	4	12	11	4	15	8	6	6	11'-6	5	6	9'-3	6'-5	2'-10	--	--	6	6	12'-0	5	6	15'-11	4'-8	11'-3	5	12'-0	0.330	0.420	0.723	1.473	253.79
7-8	10	11	8	10.5	11	9	4	12	12'-5	4	6	44	4	12	9	4	13	8	4	12	11	4	13	8	6	6	11'-6	5	6	6'-10	4'-0	2'-10	5	11'-6	6	6	12'-0	6	6	15'-5	4'-1	11'-4	6	12'-0	0.330	0.439	0.723	1.492	265.82
9-10	10	11	8	10.5	11	9	4	9	12'-5	4	6	44	4	12	9	4	13	8	4	12	11	4	13	8	6	6	11'-6	7	9	7'-8	4'-0	3'-8	7	11'-6	7	6	12'-0	7	9	15'-4	4'-0	11'-4	7	12'-0	0.330	0.439	0.723	1.492	293.58
11-15	10	11	9	11	11	9	4	12	12'-7	4	6	44	4	12	9	4	12	8	4	12	11	4	18	6	7	6	11'-6	7	9	7'-8	3'-10	3'-10	7	11'-6	7	6	12'-0	7	9	15'-1	3'-9	11'-4	7	12'-0	0.366	0.458	0.723	1.547	298.47
16-20	10	11	10.5	13.5	12	9	4	12	12'-11	4	6	44	4	12	9	4	12	8	4	12	11	4	17	6	7	6	11'-8	7	9	7'-10	3'-11	3'-11	7	11'-8	7	6	12'-2	7	9	15'-4	3'-9	11'-7	7	12'-2	0.429	0.562	0.788	1.779	302.71
21-25	10	11	12.5	15	13	9	4	9	13'-2	4	6	44	4	12	9	4	16	6	4	12	11	4	17	6	7	6	11'-10	7	9	7'-9	3'-8	4'-1	7	11'-10	7	6	12'-4	7	9	15'-5	3'-9	11'-8	7	12'-4	0.512	0.630	0.853	1.995	308.66
26-30	10	11	14	16.5	14.5	9	4	9	13'-5	4	6	44	4	12	9	4	16	6	4	12	11	4	17	6	7	6	12'-1	6	6	7'-8	3'-10	3'-10	6	12'-1	9	9	12'-7	6	6	15'-9	3'-11	11'-10	6	12'-7	0.583	0.704	0.951	2.238	328.58
31-35	10	11	15.5	18	15.5	9	4	9	13'-8	4	6	44	4	12	9	4	17	6	4	12	11	4	17	6	9	9	12'-3	6	6	8'-0	4'-0	4'-0	6	12'-3	9	9	12'-9	6	6	16'-0	4'-1	11'-11	6	12'-9	0.651	0.775	1.017	2.443	341.42
36-40	10	11	16.5	19.5	17	9	6	9	13'-11	4	6	44	4	12	9	4	17	6	4	12	11	4	18	6	9	9	12'-6	7	9	8'-6	4'-1	4'-5	7	12'-6	8	6	13'-0	7	9	16'-4	4'-3	12'-1	7	13'-0	0.707	0.854	1.115	2.676	380.37
41-45	10	11	17.5	20.5	18	9	6	9	14'-1	4	6	44	4	12	9	4	12	8	4	12	11	4	18	6	8	6	12'-8	7	9	9'-0	4'-6	4'-6	7	12'-8	8	6	13'-2	7	9	16'-6	4'-4	12'-2	7	13'-2	0.758	0.908	1.180	2.846	396.37
46-50	10	11	19	21.5	19	9	6	9	14'-3	4	6	44	4	12	9	4	12	8	4	12	11	4	12	8	8	6	12'-10	7	9	9'-2	4'-7	4'-7	7	12'-10	8	6	13'-4	7	9	16'-9	4'-6	12'-3	7	13'-4	0.830	0.963	1.245	3.038	402.53
51-55	10	11	20	23	20	6	5	6	14'-6	4	6	44	4	12	9	4	13	8	5	12	11	4	12	8	8	6	13'-0	7	9	9'-6	4'-9	4'-9	7	13'-0	8	6	13'-6	7	9	17'-0	4'-8	12'-4	7	13'-6	0.884	1.040	1.311	3.235	414.82

BENT BAR DETAIL

BARS	D
5	$3\frac{3}{4}$
6	$4\frac{1}{2}$
7	$5\frac{1}{4}$

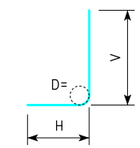

k2 & m2

NOTE:
ALL DIMENSIONS ARE OUT TO OUT.
D = PIN DIAMETER.

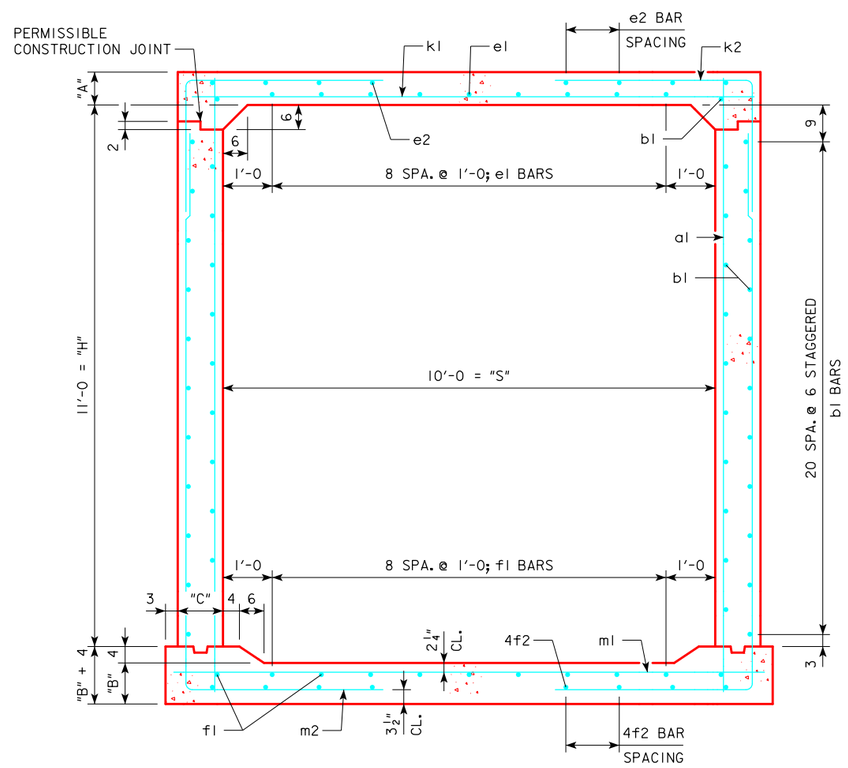

10 x 11 BARREL SECTION

NOTES:

1. DIMENSIONS LISTED ON THIS SHEET TO BE USED IN CONJUNCTION WITH SHEET RCB G2-12.
2. THE k2 AND m2 BARS HORIZONTAL LEGS MAY LAP IN LOW FILL SITUATIONS.
3. DIMENSIONS "A", "B", "C", "D", AND "SP." LISTED IN THE BAR LIST ARE IN INCHES.

LATEST REVISION DATE

APPROVED BY BRIDGE ENGINEER

IOWA DOT Highway Division

STANDARD DESIGN

SINGLE REINFORCED CONCRETE BOX CULVERTS

APRIL, 2012

CULVERT BARREL DETAILS

10 x 11 BARREL SECTIONS

RCB 10-11-12

ENGLISHLRFDSIGNEDSINGLECULVERTS.DGN - RCB 10-11-12 - THIS SHEET ISSUED 04-12.

VARIABLE DIMENSIONS AND QUANTITIES FOR 10 x 12 BARREL SECTIONS

DIMENSIONS							BAR LIST																																				QUANTITIES				
							a1			b1			e1			e2			f1			f2			k1			k2					k9		m1			m2					m9		CONCRETE (CY/FT)				STEEL
FILL	S	H	A	B	C	D	SIZE	SP.	L	SIZE	SP.	NO.	SIZE	SP.	NO.	SIZE	SP.	NO.	SIZE	SP.	NO.	SIZE	SP.	NO.	SIZE	SP.	L	SIZE	SP.	L	H	V	SIZE	L	SIZE	SP.	L	SIZE	SP.	L	H	V	SIZE	L	SLAB	FLOOR	WALLS	TOTAL	(LB/FT)
0	10	12	12.5	13	12	9	4	9	14'-0	4	6	48	4	12	9	4	17	8	4	12	11	4	17	8	5	6	11'-8	6	9	10'-6	6'-11	3'-7	--	--	7	9	12'-2	6	9	19'-5	6'-11	12'-6	--	--	0.503	0.543	0.862	1.908	265.39
1	10	12	12	12.5	12	9	5	12	13'-11	4	6	48	4	12	9	4	17	8	4	12	11	4	17	8	6	9	11'-8	6	9	10'-5	6'-11	3'-6	--	--	7	9	12'-2	6	9	19'-5	6'-11	12'-6	--	--	0.485	0.523	0.862	1.870	269.50
2	10	12	8	10	12	9	4	9	13'-5	4	6	48	5	12	9	4	17	8	4	12	11	4	14	10	6	6	11'-8	7	9	10'-11	7'-2	3'-9	--	--	6	6	12'-2	7	9	17'-10	5'-7	12'-3	7	12'-2	0.336	0.427	0.862	1.625	322.13
3	10	12	8	10	12	9	4	9	13'-5	4	6	48	4	12	9	4	17	8	4	12	11	4	16	8	6	6	11'-8	5	6	9'-7	6'-9	2'-10	--	--	6	6	12'-2	6	6	17'-3	5'-0	12'-3	6	12'-2	0.336	0.427	0.862	1.625	298.66
4-8	10	12	8	10	12	9	5	12	13'-5	4	6	48	4	12	9	4	13	10	4	12	11	4	15	8	6	6	11'-8	5	6	8'-3	5'-5	2'-10	5	11'-8	6	6	12'-2	6	6	16'-11	4'-8	12'-3	6	12'-2	0.336	0.427	0.862	1.625	297.63
9-10	10	12	8	10.5	12	9	5	12	13'-5	4	6	48	4	12	9	4	13	8	4	12	11	4	13	8	6	6	11'-8	6	6	7'-4	4'-2	3'-2	6	11'-8	7	6	12'-2	6	6	16'-6	4'-2	12'-4	6	12'-2	0.336	0.446	0.862	1.644	317.18
11-15	10	12	9	11	12	9	4	9	13'-7	4	6	48	4	12	9	4	12	8	4	12	11	4	12	8	8	9	11'-8	6	6	7'-2	3'-11	3'-3	6	11'-8	7	6	12'-2	6	6	16'-3	3'-11	12'-4	6	12'-2	0.373	0.466	0.862	1.701	318.26
16-20	10	12	10.5	13.5	13	9	5	12	13'-11	4	6	48	4	12	9	4	18	6	4	12	11	4	12	8	7	6	11'-10	6	6	7'-3	3'-11	3'-4	6	11'-10	7	6	12'-4	6	6	16'-7	4'-0	12'-7	6	12'-4	0.437	0.571	0.934	1.942	331.16
21-25	10	12	12.5	15	14.5	6	4	6	14'-2	4	6	48	4	12	9	4	12	8	4	12	11	4	12	8	7	6	12'-1	7	9	8'-2	4'-1	4'-1	7	12'-1	7	6	12'-7	7	9	16'-10	4'-2	12'-8	7	12'-7	0.526	0.644	1.041	2.211	340.76
26-30	10	12	13.5	16.5	16	6	4	6	14'-5	4	6	48	4	12	9	4	17	6	4	12	11	4	12	8	7	6	12'-4	6	6	7'-8	4'-1	3'-7	6	12'-4	9	9	12'-10	6	6	17'-1	4'-3	12'-10	6	12'-10	0.578	0.720	1.148	2.446	357.42
31-35	10	12	15.5	18	17	9	6	9	14'-8	4	6	48	4	12	9	4	12	8	4	12	11	4	12	8	9	9	12'-6	7	9	8'-8	4'-4	4'-4	7	12'-6	9	9	13'-0	7	9	17'-4	4'-5	12'-11	7	13'-0	0.667	0.792	1.220	2.679	386.66
36-40	10	12	16.5	19.5	18	9	6	9	14'-11	4	6	48	4	12	9	4	12	8	4	12	11	4	13	8	9	9	12'-8	7	9	8'-10	4'-5	4'-5	7	12'-8	8	6	13'-2	7	9	17'-8	4'-7	13'-1	7	13'-2	0.718	0.866	1.291	2.875	400.95
41-45	10	12	17.5	20.5	19.5	9	8	12	15'-1	4	6	48	4	12	9	4	12	8	4	12	11	4	13	8	8	6	12'-11	7	9	9'-2	4'-7	4'-7	7	12'-11	8	6	13'-5	7	9	17'-11	4'-9	13'-2	7	13'-5	0.775	0.927	1.398	3.100	438.00
46-50	10	12	19	22	20.5	6	4	6	15'-4	4	6	48	4	12	9	4	14	8	5	12	11	4	13	8	8	6	13'-1	9	12	11'-5	5'-1	6'-4	9	13'-1	8	6	13'-7	9	12	18'-2	4'-11	13'-3	9	13'-7	0.849	1.004	1.470	3.323	466.76
51-55	10	12	20	23	21.5	6	4	6	15'-6	5	6	48	4	12	9	4	12	8	5	12	11	4	13	8	8	6	13'-3	8	9	10'-4	4'-10	5'-6	8	13'-3	8	6	13'-9	8	9	18'-4	5'-0	13'-4	8	13'-9	0.903	1.061	1.541	3.505	482.34

BENT BAR DETAIL

BARS	D
5	$3\frac{3}{4}$
6	$4\frac{1}{2}$
7	$5\frac{1}{4}$
8	6
9	$9\frac{1}{2}$

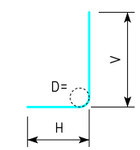

k2 & m2

NOTE:
ALL DIMENSIONS ARE OUT TO OUT.
D = PIN DIAMETER.

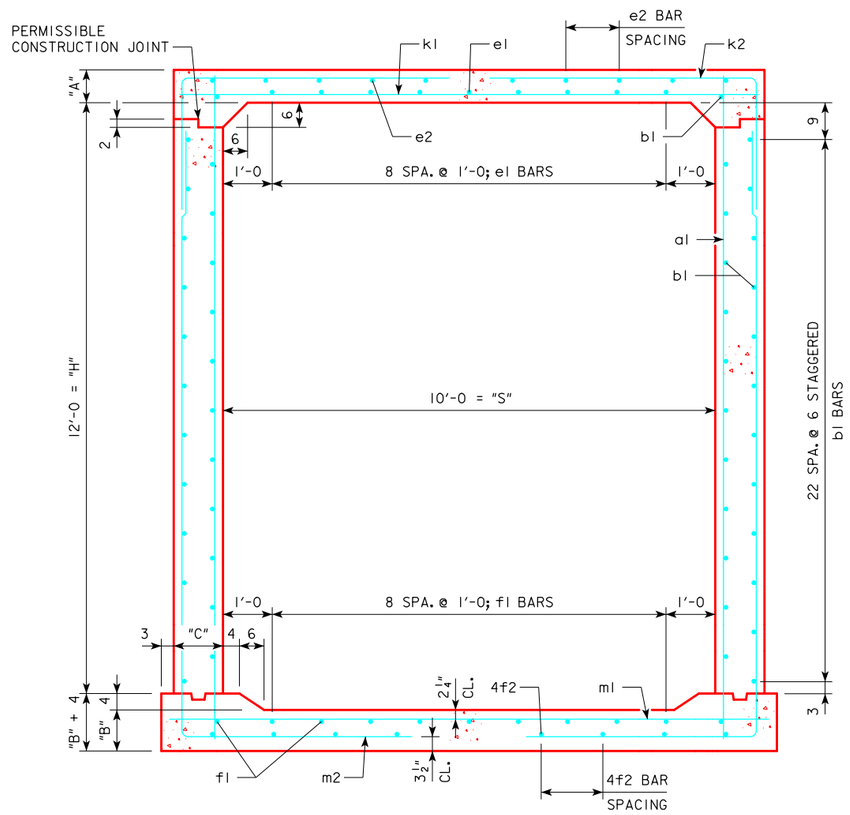

10 x 12 BARREL SECTION

NOTES:

1. DIMENSIONS LISTED ON THIS SHEET TO BE USED IN CONJUNCTION WITH SHEET RCB G2-12.
2. THE k2 AND m2 BARS HORIZONTAL LEGS MAY LAP IN LOW FILL SITUATIONS.
3. DIMENSIONS "A", "B", "C", "D", AND "SP." LISTED IN THE BAR LIST ARE IN INCHES.

LATEST REVISION DATE

APPROVED BY BRIDGE ENGINEER

IOWA DOT Highway Division

STANDARD DESIGN

SINGLE REINFORCED CONCRETE BOX CULVERTS

APRIL, 2012

CULVERT BARREL DETAILS

10 x 12 BARREL SECTIONS

RCB 10-12-12

ENGLISHLRFDSIGNEDSINGLECULVERTS.DGN - RCB 10-12-12 - THIS SHEET ISSUED 04-12.

VARIABLE DIMENSIONS AND QUANTITIES FOR 12 x 4 BARREL SECTIONS

DIMENSIONS							BAR LIST																																				QUANTITIES				
							a1			b1			e1			e2			f1			f2			k1			k2					k9		m1			m2					m9		CONCRETE (CY/FT)				STEEL
FILL	S	H	A	B	C	D	SIZE	SP.	L	SIZE	SP.	NO.	SIZE	SP.	NO.	SIZE	SP.	NO.	SIZE	SP.	NO.	SIZE	SP.	NO.	SIZE	SP.	L	SIZE	SP.	L	H	V	SIZE	L	SIZE	SP.	L	SIZE	SP.	L	H	V	SIZE	L	SLAB	FLOOR	WALLS	TOTAL	(LB/FT)
0	12	4	13.5	13	9	9	4	9	6'-1	4	6	16	5	12	11	4	14	6	4	12	13	4	13	8	7	9	13'-2	6	9	6'-8	3'-0	3'-8	6	13'-2	5	6	13'-8	6	9	8'-5	3'-11	4'-6	6	13'-8	0.595	0.598	0.202	1.395	182.47
1	12	4	12.5	13	9	9	4	12	6'-0	4	6	16	5	12	11	4	16	6	4	12	13	4	17	6	8	12	13'-2	5	6	6'-6	3'-3	3'-3	5	13'-2	5	6	13'-8	5	6	7'-11	3'-5	4'-6	5	13'-8	0.553	0.598	0.202	1.353	176.00
2-3	12	4	8.5	10	9	9	4	12	5'-5	4	6	16	4	12	11	4	12	8	4	12	13	4	14	8	8	9	13'-2	7	9	7'-6	3'-9	3'-9	7	13'-2	6	6	13'-8	7	9	8'-6	4'-3	4'-3	7	13'-8	0.387	0.469	0.202	1.058	229.26
4-5	12	4	8	10	9	9	4	12	5'-5	4	6	16	4	12	11	4	12	8	4	12	13	4	17	6	6	6	13'-2	7	9	7'-6	3'-9	3'-9	7	13'-2	6	6	13'-8	7	9	7'-9	3'-6	4'-3	7	13'-8	0.366	0.469	0.202	1.037	214.71
6-7	12	4	8.5	10.5	9	9	4	12	5'-6	4	6	16	4	12	11	4	17	6	4	12	13	4	17	6	6	6	13'-2	7	9	7'-2	3'-5	3'-9	7	13'-2	7	6	13'-8	7	9	7'-9	3'-5	4'-4	7	13'-8	0.387	0.490	0.202	1.079	226.63
8-10	12	4	9	11	9	9	4	12	5'-7	4	6	16	4	12	11	4	16	6	4	12	13	4	15	6	7	6	13'-2	6	6	6'-6	3'-3	3'-3	6	13'-2	7	6	13'-8	6	6	7'-6	3'-2	4'-4	6	13'-8	0.407	0.512	0.202	1.121	240.61
11-15	12	4	10.5	12.5	9	9	4	12	5'-10	4	6	16	4	12	11	4	13	6	4	12	13	4	13	6	7	6	13'-2	6	6	6'-2	2'-10	3'-4	6	13'-2	7	6	13'-8	6	6	7'-3	2'-9	4'-6	6	13'-8	0.470	0.577	0.202	1.249	237.37
16-20	12	4	12.5	14.5	9.5	9	4	9	6'-2	4	6	16	4	12	11	4	11	6	4	12	13	4	11	6	8	6	13'-3	7	9	6'-7	2'-6	4'-1	7	13'-3	8	6	13'-9	7	9	7'-3	2'-7	4'-8	7	13'-9	0.558	0.668	0.213	1.439	273.34
21-25	12	4	14.5	17	10.5	9	6	9	6'-6	4	6	16	4	12	11	4	11	6	4	12	13	4	11	6	8	6	13'-5	6	6	6'-5	2'-8	3'-9	6	13'-5	8	6	13'-11	5	6	7'-6	2'-8	4'-10	5	13'-11	0.652	0.786	0.236	1.674	281.11
26-30	12	4	16.5	18.5	11.5	9	4	12	6'-10	4	6	16	4	12	11	4	11	6	4	12	13	4	12	6	8	6	13'-7	6	6	6'-7	2'-9	3'-10	6	13'-7	8	6	14'-1	6	6	7'-10	2'-10	5'-0	6	14'-1	0.748	0.863	0.258	1.869	283.45
31-35	12	4	18	20.5	12	6	4	6	7'-1	4	6	16	4	12	11	4	13	6	4	12	13	4	12	6	9	6	13'-8	7	9	7'-6	3'-0	4'-6	7	13'-8	9	6	14'-2	7	9	8'-1	2'-11	5'-2	7	14'-2	0.818	0.959	0.269	2.046	336.97
36-40	12	4	19.5	22	13	9	4	9	7'-4	4	6	16	4	12	11	4	13	6	5	12	13	4	13	6	9	6	13'-10	6	6	7'-3	3'-1	4'-2	6	13'-10	9	6	14'-4	6	6	8'-4	3'-1	5'-3	6	14'-4	0.895	1.039	0.292	2.226	343.61
41-45	12	4	21	23.5	13.5	9	4	9	7'-7	4	6	16	4	12	11	4	13	6	5	12	13	4	13	6	9	6	13'-11	6	6	7'-5	3'-2	4'-3	6	13'-11	9	6	14'-5	6	6	8'-8	3'-3	5'-5	6	14'-5	0.968	1.114	0.303	2.385	348.24
46-50	12	4	22.5	25	14.5	9	5	12	7'-10	4	6	16	5	12	11	4	13	6	5	12	13	4	14	6	9	6	14'-1	6	6	7'-9	3'-4	4'-5	6	14'-1	9	6	14'-7	6	6	8'-11	3'-5	5'-6	6	14'-7	1.048	1.197	0.325	2.570	361.34
51-55	12	4	24	26	15	9	5	12	8'-1	4	6	16	5	12	11	4	14	6	5	12	13	4	14	6	9	6	14'-2	6	6	7'-11	3'-5	4'-6	6	14'-2	9	6	14'-8	6	6	9'-1	3'-6	5'-7	6	14'-8	1.122	1.251	0.336	2.709	365.11

BENT BAR DETAIL

BARS	D
5	$3\frac{3}{4}$
6	$4\frac{1}{2}$
7	$5\frac{1}{4}$

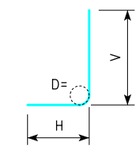

k2 & m2

NOTE:
ALL DIMENSIONS ARE OUT TO OUT.
D = PIN DIAMETER.

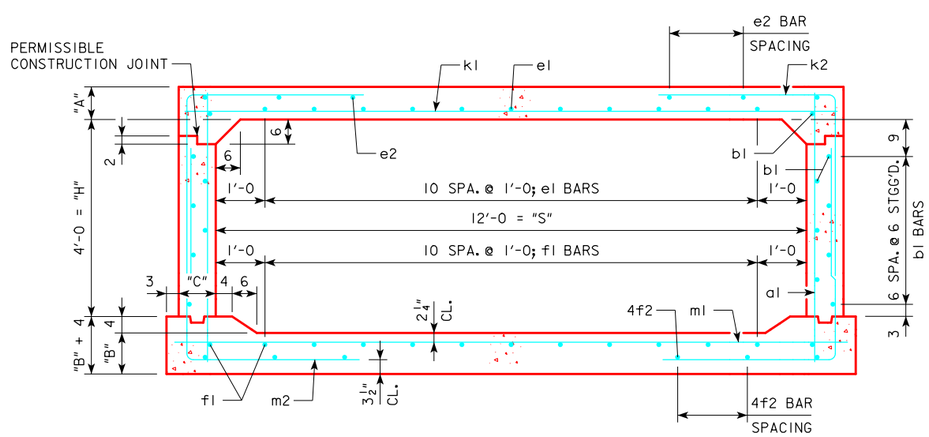

12 x 4 BARREL SECTION

NOTES:

1. DIMENSIONS LISTED ON THIS SHEET TO BE USED IN CONJUNCTION WITH SHEET RCB G2-12.
2. THE k2 AND m2 BARS HORIZONTAL LEGS MAY LAP IN LOW FILL SITUATIONS.
3. DIMENSIONS "A", "B", "C", "D", AND "SP." LISTED IN THE BAR LIST ARE IN INCHES.

LATEST REVISION DATE

APPROVED BY BRIDGE ENGINEER

IOWA DOT Highway Division

STANDARD DESIGN

SINGLE REINFORCED CONCRETE BOX CULVERTS

APRIL, 2012

CULVERT BARREL DETAILS

12 x 4 BARREL SECTIONS

RCB 12-4-12

ENGLISHLRFDSIGNEDSINGLECULVERTS.DGN - RCB 12-4-12 - THIS SHEET ISSUED 04-12.

VARIABLE DIMENSIONS AND QUANTITIES FOR 12 x 5 BARREL SECTIONS

DIMENSIONS							BAR LIST																																			QUANTITIES				
							a1			b1			e1			e2			f1			f2			k1			k2					k9		m1			m2					m9		CONCRETE (CY/FT)				STEEL
FILL	S	H	A	B	C	D	SIZE	SP.	L	SIZE	SP.	NO.	SIZE	SP.	NO.	SIZE	SP.	NO.	SIZE	SP.	NO.	SIZE	SP.	NO.	SIZE	SP.	L	SIZE	SP.	L	H	V	SIZE	L	SIZE	SP.	L	SIZE	SP.	L	H	V	SIZE	L	SLAB	FLOOR	WALLS	TOTAL	(LB/FT)
0	12	5	13.5	13	9	9	4	12	7'-1	4	6	20	5	12	11	4	14	6	4	12	13	4	13	8	7	9	13'-2	5	6	6'-4	3'-0	3'-4	5	13'-2	7	9	13'-8	5	6	9'-5	3'-11	5'-6	5	13'-8	0.595	0.598	0.257	1.450	196.74
1	12	5	12.5	13	9	9	4	12	7'-0	4	6	20	5	12	11	4	16	6	4	12	13	4	17	6	8	12	13'-2	5	6	6'-8	3'-4	3'-4	5	13'-2	7	9	13'-8	5	6	8'-11	3'-5	5'-6	5	13'-8	0.553	0.598	0.257	1.408	195.00
2-3	12	5	8.5	10.5	9	9	4	12	6'-6	4	6	20	4	12	11	4	12	8	4	12	13	4	12	8	8	9	13'-2	7	9	7'-6	3'-9	3'-9	7	13'-2	6	6	13'-8	7	9	9'-0	3'-8	5'-4	7	13'-8	0.387	0.490	0.257	1.134	236.42
4-6	12	5	8.5	10.5	9	6	4	6	6'-6	4	6	20	4	12	11	4	16	6	4	12	13	4	16	6	8	9	13'-2	5	6	6'-2	3'-4	2'-10	5	13'-2	7	6	13'-8	5	6	8'-8	3'-4	5'-4	5	13'-8	0.387	0.490	0.257	1.134	224.26
7-9	12	5	8.5	10.5	9	9	4	12	6'-6	4	6	20	4	12	11	4	16	6	4	12	13	4	16	6	7	6	13'-2	6	6	6'-6	3'-3	3'-3	6	13'-2	7	6	13'-8	6	6	8'-7	3'-3	5'-4	6	13'-8	0.387	0.490	0.257	1.134	251.08
10	12	5	9	11	9	9	4	12	6'-7	4	6	20	4	12	11	4	16	6	4	12	13	4	15	6	7	6	13'-2	6	6	6'-6	3'-3	3'-3	6	13'-2	7	6	13'-8	6	6	8'-5	3'-1	5'-4	6	13'-8	0.407	0.512	0.257	1.176	250.18
11-15	12	5	10.5	12.5	9	9	4	12	6'-10	4	6	20	4	12	11	4	13	6	4	12	13	4	13	6	7	6	13'-2	7	9	6'-9	2'-10	3'-11	7	13'-2	8	6	13'-8	7	9	8'-4	2'-10	5'-6	7	13'-8	0.470	0.577	0.257	1.304	263.82
16-20	12	5	12.5	14.5	9.5	9	4	12	7'-2	4	6	20	4	12	11	4	11	6	4	12	13	4	11	6	8	6	13'-3	7	9	6'-7	2'-6	4'-1	7	13'-3	8	6	13'-9	7	9	8'-2	2'-6	5'-8	7	13'-9	0.558	0.668	0.271	1.497	279.95
21-25	12	5	14.5	17	10.5	9	6	9	7'-6	4	6	20	4	12	11	4	11	6	4	12	13	4	11	6	8	6	13'-5	5	6	6'-1	2'-8	3'-5	5	13'-5	8	6	13'-11	5	6	8'-6	2'-8	5'-10	5	13'-11	0.652	0.786	0.301	1.739	278.32
26-30	12	5	16.5	18.5	11	9	6	9	7'-10	4	6	20	4	12	11	4	12	6	4	12	13	4	12	6	9	6	13'-6	5	6	6'-3	2'-9	3'-6	5	13'-6	9	6	14'-0	5	6	8'-9	2'-9	6'-0	5	14'-0	0.742	0.858	0.315	1.915	323.00
31-35	12	5	18	20.5	12	9	4	9	8'-1	4	6	20	4	12	11	4	13	6	4	12	13	4	12	6	9	6	13'-8	7	9	7'-6	3'-0	4'-6	7	13'-8	9	6	14'-2	7	9	9'-1	2'-11	6'-2	7	14'-2	0.818	0.959	0.344	2.121	340.89
36-40	12	5	19.5	22	12.5	9	6	9	8'-4	4	6	20	4	12	11	4	12	6	5	12	13	4	13	6	9	6	13'-9	5	6	6'-10	3'-0	3'-10	5	13'-9	9	6	14'-3	5	6	9'-4	3'-1	6'-3	5	14'-3	0.889	1.032	0.358	2.279	338.34
41-45	12	5	21	23.5	13.5	9	5	12	8'-7	4	6	20	4	12	11	4	13	6	5	12	13	4	13	6	9	6	13'-11	7	9	7'-11	3'-2	4'-9	7	13'-11	9	6	14'-5	7	9	9'-8	3'-3	6'-5	7	14'-5	0.968	1.114	0.386	2.468	358.76
46-50	12	5	22.5	25	14	9	6	9	8'-10	4	6	20	5	12	11	4	14	6	5	12	13	4	14	6	9	6	14'-0	5	6	7'-5	3'-4	4'-1	5	14'-0	9	6	14'-6	5	6	9'-10	3'-4	6'-6	5	14'-6	1.041	1.190	0.400	2.631	352.39
51-55	12	5	25	27.5	14.5	9	6	9	9'-3	4	6	20	5	12	11	4	14	6	5	12	13	4	14	6	9	6	14'-1	6	9	8'-1	3'-6	4'-7	6	14'-1	9	6	14'-7	6	9	10'-3	3'-6	6'-9	6	14'-7	1.159	1.312	0.414	2.885	359.87

BENT BAR DETAIL

BARS	D
5	$3\frac{3}{4}$
6	$4\frac{1}{2}$
7	$5\frac{1}{4}$

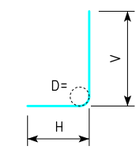

k2 & m2

NOTE:
ALL DIMENSIONS ARE OUT TO OUT.
D = PIN DIAMETER.

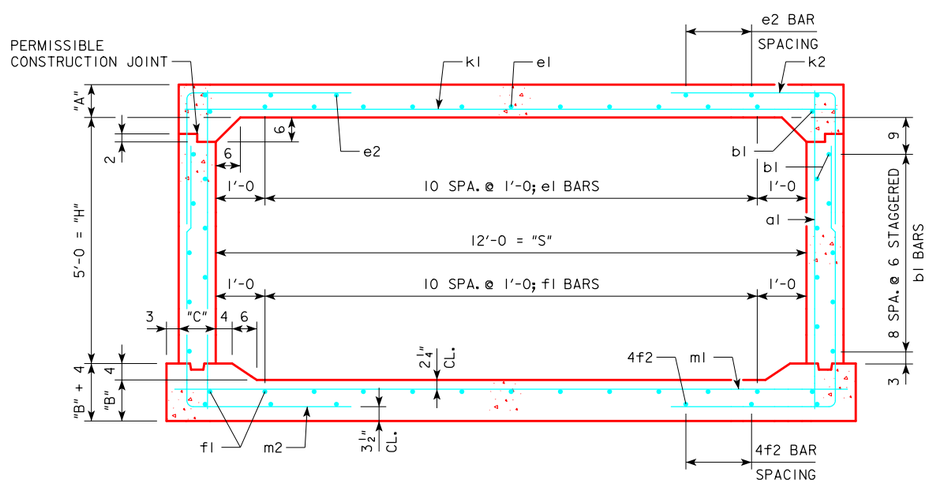

12 x 5 BARREL SECTION

NOTES:

1. DIMENSIONS LISTED ON THIS SHEET TO BE USED IN CONJUNCTION WITH SHEET RCB G2-12.
2. THE k2 AND m2 BARS HORIZONTAL LEGS MAY LAP IN LOW FILL SITUATIONS.
3. DIMENSIONS "A", "B", "C", "D", AND "SP." LISTED IN THE BAR LIST ARE IN INCHES.

LATEST REVISION DATE

APPROVED BY BRIDGE ENGINEER

IOWA DOT Highway Division

STANDARD DESIGN

SINGLE REINFORCED CONCRETE BOX CULVERTS

APRIL, 2012

CULVERT BARREL DETAILS

12 x 5 BARREL SECTIONS

RCB 12-5-12

ENGLISHLRFDSIGNEDSINGLECULVERTS.DGN - RCB 12-5-12 - THIS SHEET ISSUED 04-12.

VARIABLE DIMENSIONS AND QUANTITIES FOR 12 x 6 BARREL SECTIONS

DIMENSIONS							BAR LIST																																				QUANTITIES				
							a1			b1			e1			e2			f1			f2			k1			k2					k9		m1			m2					m9		CONCRETE (CY/FT)				STEEL
FILL	S	H	A	B	C	D	SIZE	SP.	L	SIZE	SP.	NO.	SIZE	SP.	NO.	SIZE	SP.	NO.	SIZE	SP.	NO.	SIZE	SP.	NO.	SIZE	SP.	L	SIZE	SP.	L	H	V	SIZE	L	SIZE	SP.	L	SIZE	SP.	L	H	V	SIZE	L	SLAB	FLOOR	WALLS	TOTAL	(LB/FT)
0	12	6	13.5	13	9	9	4	12	8'-1	4	6	24	5	12	11	4	17	6	4	12	13	4	13	8	6	6	13'-2	5	6	7'-0	3'-6	3'-6	5	13'-2	7	9	13'-8	5	6	10'-5	3'-11	6'-6	5	13'-8	0.595	0.598	0.313	1.506	210.34
1	12	6	12.5	13	9	9	4	12	8'-0	4	6	24	5	12	11	4	18	6	4	12	13	4	17	6	7	9	13'-2	5	6	6'-10	3'-7	3'-3	5	13'-2	7	9	13'-8	5	6	10'-0	3'-6	6'-6	5	13'-8	0.553	0.598	0.313	1.464	203.92
2	12	6	8.5	10.5	9	6	4	6	7'-6	4	6	24	5	12	11	4	17	6	4	12	13	4	17	6	8	9	13'-2	5	6	6'-4	3'-6	2'-10	5	13'-2	6	6	13'-8	5	6	9'-10	3'-6	6'-4	5	13'-8	0.387	0.490	0.313	1.190	224.29
3-7	12	6	8.5	10.5	9	6	4	6	7'-6	4	6	24	4	12	11	4	17	6	4	12	13	4	17	6	7	6	13'-2	5	6	6'-3	3'-5	2'-10	5	13'-2	7	6	13'-8	5	6	9'-9	3'-5	6'-4	5	13'-8	0.387	0.490	0.313	1.190	240.03
8-9	12	6	8.5	10.5	9	9	4	12	7'-6	4	6	24	4	12	11	4	16	6	4	12	13	4	16	6	7	6	13'-2	7	9	7'-1	3'-4	3'-9	7	13'-2	7	6	13'-8	7	9	9'-8	3'-4	6'-4	7	13'-8	0.387	0.490	0.313	1.190	259.55
10	12	6	9	11.5	9	9	4	12	7'-7	4	6	24	4	12	11	4	15	6	4	12	13	4	15	6	7	6	13'-2	7	9	6'-11	3'-2	3'-9	7	13'-2	7	6	13'-8	7	9	9'-6	3'-1	6'-5	7	13'-8	0.407	0.534	0.313	1.254	257.76
11-15	12	6	10.5	12.5	9	9	4	12	7'-10	4	6	24	4	12	11	4	13	6	4	12	13	4	13	6	8	6	13'-2	7	9	6'-9	2'-10	3'-11	7	13'-2	8	6	13'-8	7	9	9'-4	2'-10	6'-6	7	13'-8	0.470	0.577	0.313	1.360	290.24
16-20	12	6	12.5	14.5	9	9	4	12	8'-2	4	6	24	4	12	11	4	11	6	4	12	13	4	11	6	8	6	13'-2	7	9	6'-6	2'-5	4'-1	7	13'-2	8	6	13'-8	7	9	9'-2	2'-6	6'-8	7	13'-8	0.553	0.663	0.313	1.529	288.34
21-25	12	6	14.5	17	10	9	6	9	8'-6	4	6	24	4	12	11	4	11	6	4	12	13	4	11	6	8	6	13'-4	6	9	6'-4	2'-7	3'-9	6	13'-4	8	6	13'-10	6	9	9'-5	2'-7	6'-10	6	13'-10	0.647	0.782	0.347	1.776	289.11
26-30	12	6	16.5	18.5	11	9	6	12	8'-10	4	6	24	4	12	11	4	12	6	4	12	13	4	12	6	9	6	13'-6	5	6	6'-3	2'-9	3'-6	5	13'-6	9	6	14'-0	5	6	9'-10	2'-10	7'-0	5	14'-0	0.742	0.858	0.383	1.983	325.89
31-35	12	6	18	20.5	11.5	9	4	12	9'-1	4	6	24	4	12	11	4	12	6	4	12	13	4	12	6	9	6	13'-7	7	9	7'-5	2'-11	4'-6	7	13'-7	9	6	14'-1	7	9	10'-1	2'-11	7'-2	7	14'-1	0.812	0.952	0.400	2.164	345.58
36-40	12	6	19.5	22	12.5	9	6	9	9'-4	4	6	24	4	12	11	4	13	6	5	12	13	4	13	6	9	6	13'-9	5	6	6'-11	3'-1	3'-10	5	13'-9	9	6	14'-3	5	6	10'-4	3'-1	7'-3	5	14'-3	0.889	1.032	0.435	2.356	349.61
41-45	12	6	21	23.5	13	9	4	9	9'-7	4	6	24	4	12	11	4	13	6	5	12	13	4	14	6	9	6	13'-10	7	9	7'-11	3'-2	4'-9	7	13'-10	9	6	14'-4	7	9	10'-8	3'-3	7'-5	7	14'-4	0.961	1.107	0.452	2.520	364.82
46-50	12	6	22.5	25	14	9	6	9	9'-10	4	6	24	5	12	11	4	14	6	5	12	13	4	14	6	9	6	14'-0	5	6	7'-5	3'-4	4'-1	5	14'-0	9	6	14'-6	5	6	10'-11	3'-5	7'-6	5	14'-6	1.041	1.190	0.487	2.718	363.68
51-55	12	6	25.5	27.5	14.5	9	6	12	10'-4	4	6	24	5	12	11	4	15	6	5	12	13	4	15	6	9	6	14'-1	6	9	8'-2	3'-7	4'-7	6	14'-1	9	6	14'-7	6	9	11'-4	3'-7	7'-9	6	14'-7	1.181	1.312	0.504	2.997	361.97

BENT BAR DETAIL

BARS	D
5	$3\frac{3}{4}$
6	$4\frac{1}{2}$
7	$5\frac{1}{4}$

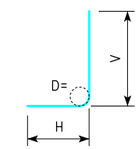

k2 & m2

NOTE:
ALL DIMENSIONS ARE OUT TO OUT.
D = PIN DIAMETER.

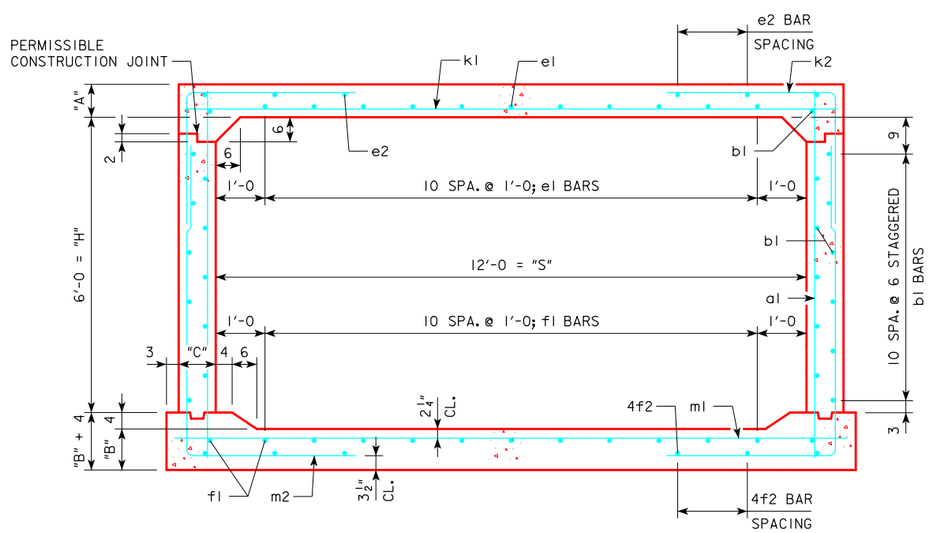

12 x 6 BARREL SECTION

NOTES:

1. DIMENSIONS LISTED ON THIS SHEET TO BE USED IN CONJUNCTION WITH SHEET RCB G2-12.
2. THE k2 AND m2 BARS HORIZONTAL LEGS MAY LAP IN LOW FILL SITUATIONS.
3. DIMENSIONS "A", "B", "C", "D", AND "SP." LISTED IN THE BAR LIST ARE IN INCHES.

LATEST REVISION DATE

APPROVED BY BRIDGE ENGINEER

IOWA DOT Highway Division

STANDARD DESIGN

SINGLE REINFORCED CONCRETE BOX CULVERTS

APRIL, 2012

CULVERT BARREL DETAILS

12 x 6 BARREL SECTIONS

RCB 12-6-12

ENGLISHLRFDSIGNEDSINGLECULVERTS.DGN - RCB 12-6-12 - THIS SHEET ISSUED 04-12.

VARIABLE DIMENSIONS AND QUANTITIES FOR 12 x 7 BARREL SECTIONS

DIMENSIONS							BAR LIST																																				QUANTITIES				
							a1			b1			e1			e2			f1			f2			k1			k2					k9		m1			m2					m9		CONCRETE (CY/FT)				STEEL
FILL	S	H	A	B	C	D	SIZE	SP.	L	SIZE	SP.	NO.	SIZE	SP.	NO.	SIZE	SP.	NO.	SIZE	SP.	NO.	SIZE	SP.	NO.	SIZE	SP.	L	SIZE	SP.	L	H	V	SIZE	L	SIZE	SP.	L	SIZE	SP.	L	H	V	SIZE	L	SLAB	FLOOR	WALLS	TOTAL	(LB/FT)
0	12	7	13.5	13	9	9	4	12	9'-1	4	6	28	5	12	11	4	14	8	4	12	13	4	14	8	6	6	13'-2	6	12	7'-11	4'-3	3'-8	6	13'-2	7	9	13'-8	7	12	11'-8	4'-2	7'-6	7	13'-8	0.595	0.598	0.368	1.561	220.24
1	12	7	12.5	13	9	9	4	12	9'-0	4	6	28	5	12	11	4	15	8	4	12	13	4	13	8	7	9	13'-2	5	6	7'-7	4'-4	3'-3	5	13'-2	7	9	13'-8	5	6	11'-4	3'-10	7'-6	5	13'-8	0.553	0.598	0.368	1.519	219.37
2-3	12	7	8.5	10.5	9	6	4	6	8'-6	4	6	28	4	12	11	4	18	6	4	12	13	4	18	6	7	6	13'-2	5	6	6'-5	3'-7	2'-10	5	13'-2	7	6	13'-8	5	6	10'-11	3'-7	7'-4	5	13'-8	0.387	0.490	0.368	1.245	250.97
4-6	12	7	8.5	10.5	9	6	4	6	8'-6	4	6	28	4	12	11	4	17	6	4	12	13	4	17	6	7	6	13'-2	5	6	6'-3	3'-5	2'-10	5	13'-2	7	6	13'-8	5	6	10'-9	3'-5	7'-4	5	13'-8	0.387	0.490	0.368	1.245	249.58
7-8	12	7	8.5	10.5	9	6	4	6	8'-6	4	6	28	4	12	11	4	16	6	4	12	13	4	16	6	7	6	13'-2	5	6	6'-1	3'-3	2'-10	5	13'-2	7	6	13'-8	6	6	10'-7	3'-3	7'-4	6	13'-8	0.387	0.490	0.368	1.245	268.16
9-10	12	7	9	12	9	9	4	12	8'-8	4	6	28	4	12	11	4	16	6	4	12	13	4	15	6	7	6	13'-2	7	9	7'-1	3'-3	3'-10	7	13'-2	7	6	13'-8	7	9	10'-6	3'-1	7'-5	7	13'-8	0.407	0.555	0.368	1.330	268.58
11-15	12	7	10.5	12.5	9	9	4	12	8'-10	4	6	28	4	12	11	4	14	6	4	12	13	4	14	6	8	6	13'-2	7	9	6'-10	2'-11	3'-11	7	13'-2	8	6	13'-8	7	9	10'-5	2'-11	7'-6	7	13'-8	0.470	0.577	0.368	1.415	300.95
16-20	12	7	12.5	14.5	9	6	4	6	9'-2	4	6	28	4	12	11	4	11	6	4	12	13	4	12	6	8	6	13'-2	5	6	5'-8	2'-6	3'-2	5	13'-2	8	6	13'-8	5	6	10'-3	2'-7	7'-8	5	13'-8	0.553	0.663	0.368	1.584	280.82
21-25	12	7	14.5	17	10	9	6	12	9'-6	4	6	28	4	12	11	4	12	6	4	12	13	4	12	6	8	6	13'-4	5	6	6'-1	2'-8	3'-5	5	13'-4	9	6	13'-10	5	6	10'-6	2'-8	7'-10	5	13'-10	0.647	0.782	0.409	1.838	310.74
26-30	12	7	16.5	19	10.5	9	6	9	9'-10	4	6	28	4	12	11	4	12	6	4	12	13	4	12	6	9	6	13'-5	6	9	6'-8	2'-9	3'-11	6	13'-5	9	6	13'-11	6	9	10'-10	2'-10	8'-0	6	13'-11	0.736	0.874	0.431	2.041	345.82
31-35	12	7	18	20.5	11.5	9	4	9	10'-1	4	6	28	4	12	11	4	12	6	4	12	13	4	13	6	9	6	13'-7	7	9	7'-5	2'-11	4'-6	7	13'-7	9	6	14'-1	7	9	11'-2	3'-0	8'-2	7	14'-1	0.812	0.952	0.471	2.235	360.03
36-40	12	7	19.5	22	12	9	6	9	10'-4	4	6	28	4	12	11	4	13	6	5	12	13	4	13	6	9	6	13'-8	6	9	7'-3	3'-1	4'-2	6	13'-8	9	6	14'-2	6	9	11'-4	3'-1	8'-3	6	14'-2	0.883	1.026	0.492	2.401	360.71
41-45	12	7	21	23.5	13	9	4	9	10'-7	4	6	28	4	12	11	4	14	6	5	12	13	4	14	6	9	6	13'-10	7	9	8'-0	3'-3	4'-9	7	13'-10	9	6	14'-4	7	9	11'-9	3'-4	8'-5	7	14'-4	0.961	1.107	0.532	2.600	375.92
46-50	12	7	23.5	25.5	13.5	9	5	9	11'-0	4	6	28	5	12	11	4	14	6	5	12	13	4	15	6	9	6	13'-11	5	6	7'-6	3'-5	4'-1	5	13'-11	9	6	14'-5	5	6	12'-1	3'-6	8'-7	5	14'-5	1.078	1.205	0.553	2.836	361.63
51-55	12	7	26	28	14	9	5	9	11'-5	4	6	28	5	12	11	4	16	6	5	12	13	4	16	6	9	6	14'-0	6	9	8'-4	3'-8	4'-8	6	14'-0	9	6	14'-6	6	9	12'-5	3'-8	8'-9	6	14'-6	1.195	1.327	0.573	3.095	368.84

BENT BAR DETAIL

BARS	D
5	$3\frac{3}{4}$
6	$4\frac{1}{2}$
7	$5\frac{1}{4}$

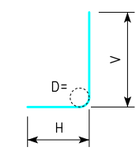

k2 & m2

NOTE:
ALL DIMENSIONS ARE OUT TO OUT.
D = PIN DIAMETER.

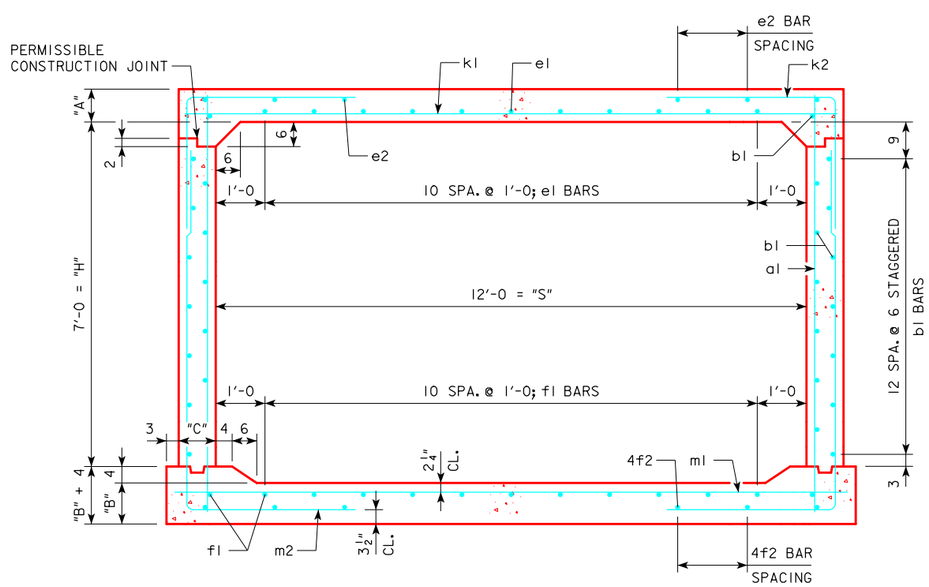

12 x 7 BARREL SECTION

NOTES:

1. DIMENSIONS LISTED ON THIS SHEET TO BE USED IN CONJUNCTION WITH SHEET RCB G2-12.
2. THE k2 AND m2 BARS HORIZONTAL LEGS MAY LAP IN LOW FILL SITUATIONS.
3. DIMENSIONS "A", "B", "C", "D", AND "SP." LISTED IN THE BAR LIST ARE IN INCHES.

LATEST REVISION DATE

APPROVED BY BRIDGE ENGINEER

IOWA DOT Highway Division

STANDARD DESIGN

SINGLE REINFORCED CONCRETE BOX CULVERTS

APRIL, 2012

CULVERT BARREL DETAILS

12 x 7 BARREL SECTIONS

RCB 12-7-12

ENGLISHLRFDSIGNEDSINGLECULVERTS.DGN - RCB 12-7-12 - THIS SHEET ISSUED 04-12.

VARIABLE DIMENSIONS AND QUANTITIES FOR 12 x 8 BARREL SECTIONS

DIMENSIONS							BAR LIST																																				QUANTITIES				
							a1			b1			e1			e2			f1			f2			k1			k2					k9		m1			m2					m9		CONCRETE (CY/FT)				STEEL
FILL	S	H	A	B	C	D	SIZE	SP.	L	SIZE	SP.	NO.	SIZE	SP.	NO.	SIZE	SP.	NO.	SIZE	SP.	NO.	SIZE	SP.	NO.	SIZE	SP.	L	SIZE	SP.	L	H	V	SIZE	L	SIZE	SP.	L	SIZE	SP.	L	H	V	SIZE	L	SLAB	FLOOR	WALLS	TOTAL	(LB/FT)
0	12	8	13.5	13.5	9	9	4	12	10'-2	4	6	32	5	12	11	4	15	10	4	12	13	4	15	8	6	6	13'-2	6	12	9'-2	5'-7	3'-7	6	13'-2	7	9	13'-8	7	12	13'-0	4'-5	8'-7	7	13'-8	0.595	0.620	0.424	1.639	235.66
1	12	8	12.5	13	9	9	4	12	10'-0	4	6	32	5	12	11	4	15	10	4	12	13	4	15	8	7	9	13'-2	5	6	9'-0	5'-9	3'-3	5	13'-2	7	9	13'-8	5	6	12'-11	4'-5	8'-6	5	13'-8	0.553	0.598	0.424	1.575	237.42
2	12	8	8.5	10.5	9	6	4	6	9'-6	4	6	32	6	12	11	4	14	8	4	12	13	4	13	8	7	6	13'-2	5	6	6'-11	4'-1	2'-10	5	13'-2	7	6	13'-8	5	6	12'-3	3'-11	8'-4	5	13'-8	0.387	0.490	0.424	1.301	275.76
3-6	12	8	8.5	10.5	9	6	4	6	9'-6	4	6	32	4	12	11	4	12	8	4	12	13	4	12	8	7	6	13'-2	5	6	6'-6	3'-8	2'-10	5	13'-2	7	6	13'-8	5	6	12'-0	3'-8	8'-4	5	13'-8	0.387	0.490	0.424	1.301	263.84
7-9	12	8	8.5	11.5	9	6	4	6	9'-7	4	6	32	4	12	11	4	16	6	4	12	13	4	16	6	7	6	13'-2	6	6	6'-8	3'-4	3'-4	6	13'-2	7	6	13'-8	5	6	11'-8	3'-3	8'-5	5	13'-8	0.387	0.534	0.424	1.345	273.47
10	12	8	9	12.5	9	9	4	12	9'-8	4	6	32	4	12	11	4	16	6	4	12	13	4	15	6	7	6	13'-2	7	9	7'-1	3'-4	3'-9	7	13'-2	7	6	13'-8	7	9	11'-7	3'-1	8'-6	7	13'-8	0.407	0.577	0.424	1.408	278.76
11-15	12	8	10.5	12.5	9	9	4	12	9'-10	4	6	32	4	12	11	4	14	6	4	12	13	4	15	6	8	6	13'-2	7	9	6'-11	3'-0	3'-11	7	13'-2	8	6	13'-8	7	9	11'-7	3'-1	8'-6	7	13'-8	0.470	0.577	0.424	1.471	312.08
16-20	12	8	12.5	14.5	9	9	4	12	10'-2	4	6	32	4	12	11	4	12	6	4	12	13	4	13	6	8	6	13'-2	7	9	6'-9	2'-8	4'-1	7	13'-2	9	6	13'-8	7	9	11'-5	2'-9	8'-8	7	13'-8	0.553	0.663	0.424	1.640	330.84
21-25	12	8	14.5	17	10	9	6	9	10'-6	4	6	32	4	12	11	4	13	6	4	12	13	4	13	6	9	6	13'-4	5	6	6'-3	2'-10	3'-5	5	13'-4	9	6	13'-10	5	6	11'-8	2'-10	8'-10	5	13'-10	0.647	0.782	0.471	1.900	351.79
26-30	12	8	16.5	19	10.5	9	6	9	10'-10	4	6	32	4	12	11	4	13	6	4	12	13	4	13	6	9	6	13'-5	6	9	6'-10	2'-11	3'-11	6	13'-5	9	6	13'-11	6	9	12'-0	3'-0	9'-0	6	13'-11	0.736	0.874	0.496	2.106	358.08
31-35	12	8	18	20.5	11.5	9	4	9	11'-1	4	6	32	4	12	11	4	13	6	4	12	13	4	14	6	9	6	13'-7	7	9	7'-7	3'-1	4'-6	7	13'-7	9	6	14'-1	7	9	12'-4	3'-2	9'-2	7	14'-1	0.812	0.952	0.542	2.306	372.05
36-40	12	8	19.5	22	12.5	9	6	9	11'-4	4	6	32	4	12	11	4	14	6	5	12	13	4	14	6	9	6	13'-9	5	6	7'-1	3'-3	3'-10	5	13'-9	9	6	14'-3	5	6	12'-7	3'-4	9'-3	5	14'-3	0.889	1.032	0.589	2.510	373.16
41-45	12	8	21	23.5	13	9	5	12	11'-7	4	6	32	4	12	11	4	15	6	5	12	13	4	15	6	9	6	13'-10	7	9	8'-2	3'-5	4'-9	7	13'-10	9	6	14'-4	7	9	12'-10	3'-5	9'-5	7	14'-4	0.961	1.107	0.613	2.681	391.50
46-50	12	8	23	25.5	14	9	6	9	11'-11	4	6	32	5	12	11	4	15	6	5	12	13	4	16	6	9	6	14'-0	5	6	7'-8	3'-7	4'-1	5	14'-0	9	6	14'-6	5	6	13'-3	3'-8	9'-7	5	14'-6	1.063	1.213	0.659	2.935	388.29
51-55	12	8	25.5	28	14.5	9	6	9	12'-4	4	6	32	5	12	11	4	16	6	5	12	13	4	17	6	9	6	14'-1	6	9	8'-6	3'-10	4'-8	6	14'-1	9	6	14'-7	6	9	13'-8	3'-11	9'-9	6	14'-7	1.181	1.335	0.683	3.199	396.32

BENT BAR DETAIL

BARS	D
5	$3\frac{3}{4}$
6	$4\frac{1}{2}$
7	$5\frac{1}{4}$

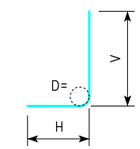

k2 & m2

NOTE:
ALL DIMENSIONS ARE OUT TO OUT.
D = PIN DIAMETER.

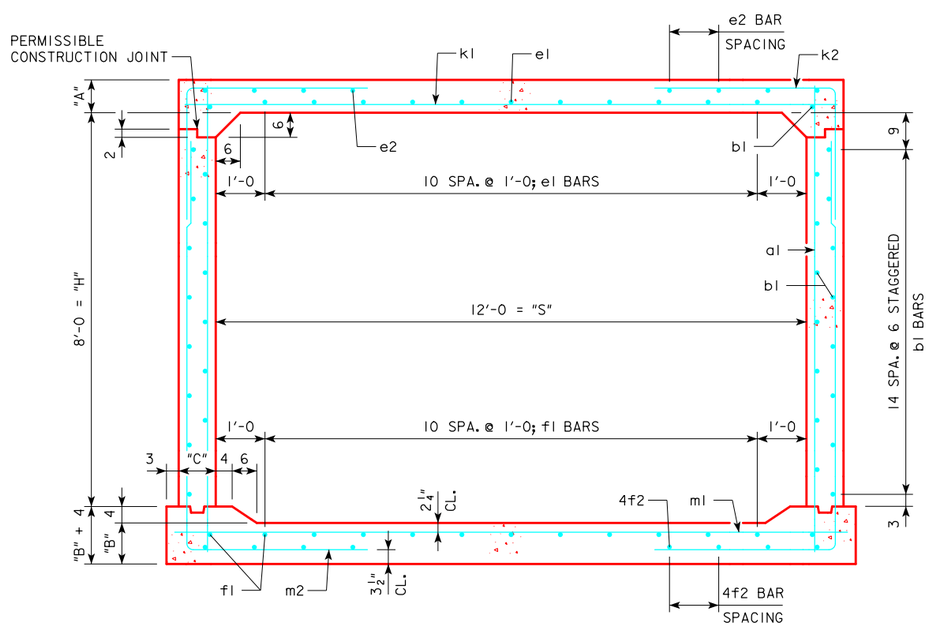

12 x 8 BARREL SECTION

NOTES:

1. DIMENSIONS LISTED ON THIS SHEET TO BE USED IN CONJUNCTION WITH SHEET RCB G2-12.
2. THE k2 AND m2 BARS HORIZONTAL LEGS MAY LAP IN LOW FILL SITUATIONS.
3. DIMENSIONS "A", "B", "C", "D", AND "SP." LISTED IN THE BAR LIST ARE IN INCHES.

LATEST REVISION DATE

APPROVED BY BRIDGE ENGINEER

IOWA DOT Highway Division

STANDARD DESIGN

SINGLE REINFORCED CONCRETE BOX CULVERTS

APRIL, 2012

CULVERT BARREL DETAILS

12 x 8 BARREL SECTIONS

RCB 12-8-12

ENGLISHLRFDSIGNEDSINGLECULVERTS.DGN - RCB 12-8-12 - THIS SHEET ISSUED 04-12.

VARIABLE DIMENSIONS AND QUANTITIES FOR 12 x 9 BARREL SECTIONS

DIMENSIONS							BAR LIST																																				QUANTITIES				
							a1			b1			e1			e2			f1			f2			k1			k2					k9		m1			m2					m9		CONCRETE (CY/FT)				STEEL
FILL	S	H	A	B	C	D	SIZE	SP.	L	SIZE	SP.	NO.	SIZE	SP.	NO.	SIZE	SP.	NO.	SIZE	SP.	NO.	SIZE	SP.	NO.	SIZE	SP.	L	SIZE	SP.	L	H	V	SIZE	L	SIZE	SP.	L	SIZE	SP.	L	H	V	SIZE	L	SLAB	FLOOR	WALLS	TOTAL	(LB/FT)
0	12	9	13.5	13.5	9	9	4	12	11'-2	4	6	36	5	12	11	4	16	10	4	12	13	4	14	10	6	6	13'-2	5	6	10'-9	7'-6	3'-3	--	--	7	9	13'-8	5	6	14'-10	5'-3	9'-7	5	13'-8	0.595	0.620	0.479	1.694	260.37
1	12	9	12.5	13	9	9	4	12	11'-0	4	6	36	5	12	11	4	16	10	4	12	13	4	14	10	7	9	13'-2	5	6	10'-9	7'-6	3'-3	--	--	7	9	13'-8	5	6	14'-11	5'-5	9'-6	5	13'-8	0.553	0.598	0.479	1.630	257.92
2	12	9	8.5	10.5	9	6	4	6	10'-6	4	6	36	6	12	11	4	16	8	4	12	13	4	15	8	7	6	13'-2	5	6	7'-7	4'-9	2'-10	5	13'-2	7	6	13'-8	5	6	13'-8	4'-4	9'-4	5	13'-8	0.387	0.490	0.479	1.356	289.87
3-5	12	9	8.5	10.5	9	6	4	6	10'-6	4	6	36	4	12	11	4	14	8	4	12	13	4	14	8	7	6	13'-2	5	6	7'-0	4'-2	2'-10	5	13'-2	7	6	13'-8	5	6	13'-5	4'-1	9'-4	5	13'-8	0.387	0.490	0.479	1.356	277.26
6-7	12	9	8.5	10.5	9	9	4	12	10'-6	4	6	36	4	12	11	4	12	8	4	12	13	4	12	8	7	6	13'-2	7	9	7'-6	3'-9	3'-9	7	13'-2	7	6	13'-8	7	9	13'-0	3'-8	9'-4	7	13'-8	0.387	0.490	0.479	1.356	295.63
8-10	12	9	9.5	12.5	9	6	4	6	10'-9	4	6	36	4	12	11	4	16	6	4	12	13	4	16	6	7	6	13'-2	5	6	6'-3	3'-4	2'-11	5	13'-2	7	6	13'-8	5	6	12'-9	3'-3	9'-6	5	13'-8	0.428	0.577	0.479	1.484	269.34
11-15	12	9	10.5	12.5	9	9	4	12	10'-10	4	6	36	4	12	11	4	16	6	4	12	13	4	16	6	8	6	13'-2	7	9	7'-2	3'-3	3'-11	7	13'-2	8	6	13'-8	7	9	12'-9	3'-3	9'-6	7	13'-8	0.470	0.577	0.479	1.526	324.16
16-20	12	9	12.5	15	9.5	9	4	12	11'-2	4	6	36	4	12	11	4	13	6	4	12	13	4	14	6	8	6	13'-3	7	9	7'-0	2'-11	4'-1	7	13'-3	8	6	13'-9	7	9	12'-8	3'-0	9'-8	7	13'-9	0.558	0.690	0.506	1.754	324.11
21-25	12	9	14.5	17	11	9	6	9	11'-6	4	6	36	4	12	11	4	16	6	4	12	13	4	14	6	8	6	13'-6	5	6	6'-10	3'-5	3'-5	5	13'-6	8	6	14'-0	5	6	13'-0	3'-2	9'-10	5	14'-0	0.657	0.791	0.587	2.035	328.16
26-30	12	9	16.5	19	12	9	5	12	11'-10	4	6	36	4	12	11	4	14	6	4	12	13	4	15	6	9	6	13'-8	7	9	7'-8	3'-3	4'-5	7	13'-8	9	6	14'-2	7	9	13'-4	3'-4	10'-0	7	14'-2	0.753	0.892	0.640	2.285	387.53
31-35	12	9	18	20.5	13	9	4	9	12'-1	4	6	36	4	12	11	4	15	6	4	12	13	4	15	6	9	6	13'-10	6	6	7'-5	3'-5	4'-0	6	13'-10	9	6	14'-4	6	6	13'-8	3'-6	10'-2	6	14'-4	0.830	0.971	0.693	2.494	393.97
36-40	12	9	19.5	22	14	9	4	9	12'-4	4	6	36	4	12	11	4	15	6	5	12	13	4	16	6	9	6	14'-0	6	6	7'-9	3'-7	4'-2	6	14'-0	9	6	14'-6	6	6	13'-11	3'-8	10'-3	6	14'-6	0.908	1.053	0.746	2.707	405.13
41-45	12	9	21	23.5	14.5	9	5	12	12'-7	4	6	36	4	12	11	4	16	6	5	12	13	4	16	6	9	6	14'-1	6	6	8'-0	3'-9	4'-3	6	14'-1	9	6	14'-7	6	6	14'-3	3'-10	10'-5	6	14'-7	0.981	1.128	0.772	2.881	414.66
46-50	12	9	22.5	25	15.5	9	6	12	12'-10	4	6	36	5	12	11	4	16	6	5	12	13	4	17	6	9	6	14'-3	7	9	8'-10	3'-11	4'-11	7	14'-3	9	6	14'-9	7	9	14'-6	4'-0	10'-6	7	14'-9	1.062	1.212	0.825	3.099	432.16
51-55	12	9	25	27.5	16.5	9	5	12	13'-3	4	6	36	5	12	11	4	17	6	5	12	13	4	12	8	9	6	14'-5	6	6	8'-9	4'-2	4'-7	6	14'-5	9	6	14'-11	6	6	15'-0	4'-3	10'-9	6	14'-11	1.190	1.345	0.878	3.413	435.26

BENT BAR DETAIL

BARS	D
5	$3\frac{3}{4}$
6	$4\frac{1}{2}$
7	$5\frac{1}{4}$

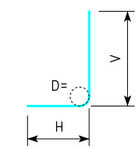

k2 & m2

NOTE:
ALL DIMENSIONS ARE OUT TO OUT.
D = PIN DIAMETER.

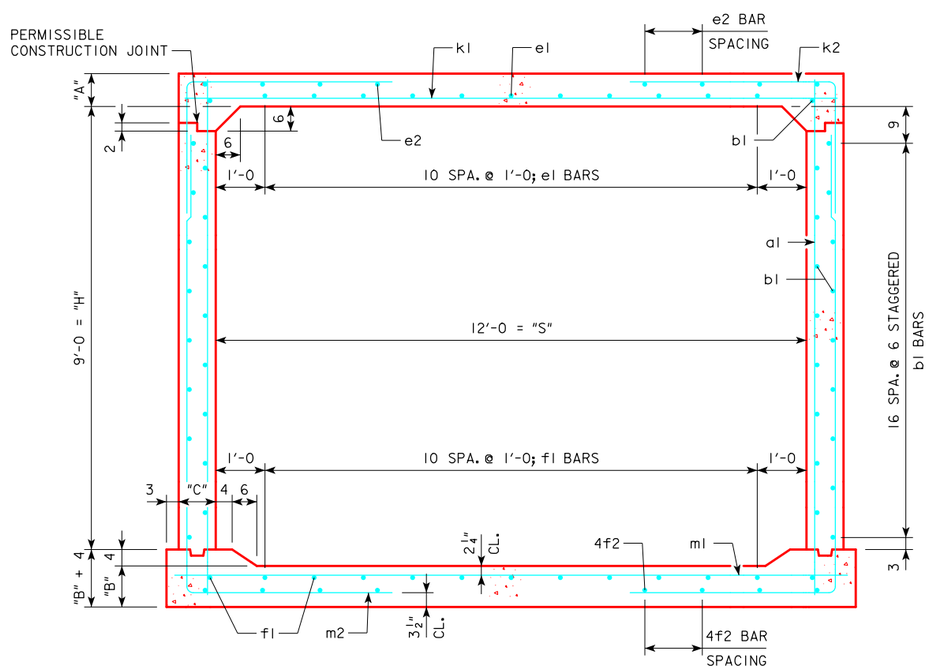

12 x 9 BARREL SECTION

NOTES:

1. DIMENSIONS LISTED ON THIS SHEET TO BE USED IN CONJUNCTION WITH SHEET RCB G2-12.
2. THE k2 AND m2 BARS HORIZONTAL LEGS MAY LAP IN LOW FILL SITUATIONS.
3. DIMENSIONS "A", "B", "C", "D", AND "SP." LISTED IN THE BAR LIST ARE IN INCHES.

LATEST REVISION DATE

APPROVED BY BRIDGE ENGINEER

IOWA DOT Highway Division

STANDARD DESIGN

SINGLE REINFORCED CONCRETE BOX CULVERTS

APRIL, 2012

CULVERT BARREL DETAILS

12 x 9 BARREL SECTIONS

RCB 12-9-12

ENGLISHLRFDSIGNEDSINGLECULVERTS.DGN - RCB 12-9-12 - THIS SHEET ISSUED 04-12.

VARIABLE DIMENSIONS AND QUANTITIES FOR 12 x 10 BARREL SECTIONS

DIMENSIONS							BAR LIST																																				QUANTITIES				
							a1			b1			e1			e2			f1			f2			k1			k2					k9		m1			m2					m9		CONCRETE (CY/FT)				STEEL
FILL	S	H	A	B	C	D	SIZE	SP.	L	SIZE	SP.	NO.	SIZE	SP.	NO.	SIZE	SP.	NO.	SIZE	SP.	NO.	SIZE	SP.	NO.	SIZE	SP.	L	SIZE	SP.	L	H	V	SIZE	L	SIZE	SP.	L	SIZE	SP.	L	H	V	SIZE	L	SLAB	FLOOR	WALLS	TOTAL	(LB/FT)
0	12	10	13.5	13.5	10	9	4	12	12'-2	4	6	40	5	12	11	4	16	10	4	12	13	4	16	10	6	6	13'-4	5	6	10'-10	7'-7	3'-3	--	--	7	9	13'-10	5	6	16'-7	6'-0	10'-7	5	13'-10	0.604	0.629	0.594	1.827	273.08
1	12	10	12.5	13.5	10	9	4	12	12'-1	4	6	40	5	12	11	4	16	10	4	12	13	4	16	10	7	9	13'-4	5	6	10'-9	7'-7	3'-2	--	--	7	9	13'-10	5	6	17'-6	6'-11	10'-7	--	--	0.562	0.629	0.594	1.785	273.16
2	12	10	8.5	10.5	10	9	4	12	11'-6	4	6	40	6	12	11	4	14	10	4	12	13	4	16	8	7	6	13'-4	7	9	9'-3	5'-6	3'-9	7	13'-4	7	6	13'-10	7	9	15'-2	4'-10	10'-4	7	13'-10	0.394	0.498	0.594	1.486	333.82
3	12	10	8.5	10.5	10	9	4	12	11'-6	4	6	40	4	12	11	4	16	8	4	12	13	4	15	8	7	6	13'-4	7	9	8'-6	4'-9	3'-9	7	13'-4	7	6	13'-10	7	9	14'-10	4'-6	10'-4	7	13'-10	0.394	0.498	0.594	1.486	317.24
4-7	12	10	8.5	10.5	10	9	4	12	11'-6	4	6	40	4	12	11	4	15	8	4	12	13	4	14	8	7	6	13'-4	7	9	8'-2	4'-5	3'-9	7	13'-4	7	6	13'-10	7	9	14'-7	4'-3	10'-4	7	13'-10	0.394	0.498	0.594	1.486	313.89
8-10	12	10	9	12	10	9	4	12	11'-8	4	6	40	4	12	11	4	18	6	4	12	13	4	18	6	7	6	13'-4	6	6	6'-11	3'-8	3'-3	6	13'-4	7	6	13'-10	6	6	14'-1	3'-8	10'-5	6	13'-10	0.415	0.563	0.594	1.572	308.84
11-15	12	10	10.5	12.5	10	9	4	12	11'-10	4	6	40	4	12	11	4	16	6	4	12	13	4	17	6	8	6	13'-4	6	6	6'-10	3'-5	3'-5	6	13'-4	8	6	13'-10	6	6	14'-0	3'-6	10'-6	6	13'-10	0.478	0.585	0.594	1.657	342.50
16-20	12	10	12.5	15	11	9	6	9	12'-2	4	6	40	4	12	11	4	17	6	4	12	13	4	16	6	8	6	13'-6	6	6	7'-2	3'-7	3'-7	6	13'-6	8	6	14'-0	5	6	14'-1	3'-5	10'-8	5	14'-0	0.571	0.703	0.655	1.929	353.13
21-25	12	10	14.5	17	12	9	4	12	12'-6	4	6	40	4	12	11	4	15	6	4	12	13	4	16	6	8	6	13'-8	6	6	7'-2	3'-5	3'-9	6	13'-8	8	6	14'-2	6	6	14'-4	3'-6	10'-10	6	14'-2	0.667	0.802	0.714	2.183	351.13
26-30	12	10	16.5	19	13.5	9	4	9	12'-10	4	6	40	4	12	11	4	17	6	4	12	13	4	16	6	8	6	13'-11	6	6	7'-10	3'-11	3'-11	6	13'-11	9	6	14'-5	6	6	14'-9	3'-9	11'-0	6	14'-5	0.770	0.909	0.803	2.482	387.63
31-35	12	10	18	20.5	14.5	6	4	6	13'-1	4	6	40	4	12	11	4	17	6	4	12	13	4	17	6	9	6	14'-1	6	6	8'-0	4'-0	4'-0	6	14'-1	9	6	14'-7	6	6	15'-1	3'-11	11'-2	6	14'-7	0.847	0.990	0.862	2.699	425.53
36-40	12	10	19.5	22.5	15.5	9	6	9	13'-5	4	6	40	4	12	11	4	17	6	5	12	13	4	17	6	9	6	14'-3	7	9	8'-8	4'-0	4'-8	7	14'-3	9	6	14'-9	7	9	15'-5	4'-1	11'-4	7	14'-9	0.927	1.096	0.921	2.944	449.47
41-45	12	10	21	24	16.5	9	4	12	13'-8	4	6	40	4	12	11	4	17	6	5	12	13	4	12	8	9	6	14'-5	8	9	9'-8	4'-1	5'-7	8	14'-5	9	6	14'-11	8	9	15'-8	4'-3	11'-5	8	14'-11	1.008	1.180	0.980	3.168	470.11
46-50	12	10	22.5	25.5	17.5	9	4	9	13'-11	4	6	40	5	12	11	4	17	6	5	12	13	4	12	8	9	6	14'-7	8	9	9'-11	4'-3	5'-8	8	14'-7	9	6	15'-1	8	9	16'-0	4'-5	11'-7	8	15'-1	1.090	1.266	1.039	3.395	487.11
51-55	12	10	24	27	18	9	6	9	14'-2	4	6	40	5	12	11	4	12	8	5	12	13	4	12	8	9	6	14'-8	7	9	9'-6	4'-5	5'-1	7	14'-8	9	6	15'-2	7	9	16'-2	4'-6	11'-8	7	15'-2	1.167	1.345	1.069	3.581	474.08

BENT BAR DETAIL

BARS	D
5	$3\frac{3}{4}$
6	$4\frac{1}{2}$
7	$5\frac{1}{4}$
8	6

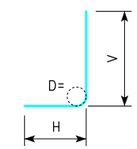

k2 & m2

NOTE:
ALL DIMENSIONS ARE OUT TO OUT.
D = PIN DIAMETER.

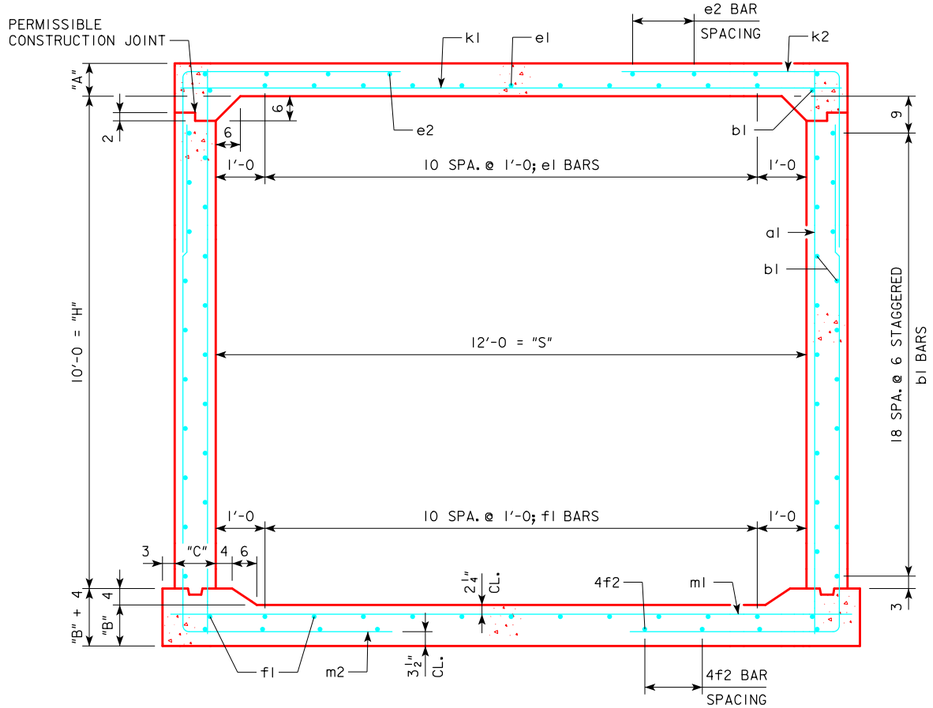

12 x 10 BARREL SECTION

NOTES:

1. DIMENSIONS LISTED ON THIS SHEET TO BE USED IN CONJUNCTION WITH SHEET RCB G2-12.
2. THE k2 AND m2 BARS HORIZONTAL LEGS MAY LAP IN LOW FILL SITUATIONS.
3. DIMENSIONS "A", "B", "C", "D", AND "SP." LISTED IN THE BAR LIST ARE IN INCHES.

LATEST REVISION DATE

APPROVED BY BRIDGE ENGINEER

IOWA DOT Highway Division

STANDARD DESIGN

SINGLE REINFORCED CONCRETE BOX CULVERTS

APRIL, 2012

CULVERT BARREL DETAILS

12 x 10 BARREL SECTIONS

RCB 12-10-12

ENGLISHLRFDSIGNEDSINGLECULVERTS.DGN - RCB 12-10-12 - THIS SHEET ISSUED 04-12.

VARIABLE DIMENSIONS AND QUANTITIES FOR 12 x 11 BARREL SECTIONS

DIMENSIONS							BAR LIST																																				QUANTITIES				
							a1			b1			e1			e2			f1			f2			k1			k2					k9		m1			m2					m9		CONCRETE (CY/FT)				STEEL
FILL	S	H	A	B	C	D	SIZE	SP.	L	SIZE	SP.	NO.	SIZE	SP.	NO.	SIZE	SP.	NO.	SIZE	SP.	NO.	SIZE	SP.	NO.	SIZE	SP.	L	SIZE	SP.	L	H	V	SIZE	L	SIZE	SP.	L	SIZE	SP.	L	H	V	SIZE	L	SLAB	FLOOR	WALLS	TOTAL	(LB/FT)
0	12	11	13.5	13.5	11	9	4	9	13'-2	4	6	44	5	12	11	4	16	10	4	12	13	4	16	10	6	6	13'-6	6	9	11'-5	7'-10	3'-7	--	--	7	9	14'-0	6	9	18'-9	7'-2	11'-7	--	--	0.614	0.636	0.723	1.973	293.37
1	12	11	12.5	13.5	11	9	4	9	13'-1	4	6	44	5	12	11	4	16	10	4	12	13	4	16	10	7	9	13'-6	6	9	11'-4	7'-10	3'-6	--	--	7	9	14'-0	6	9	19'-5	7'-10	11'-7	--	--	0.571	0.636	0.723	1.930	293.03
2	12	11	8.5	10.5	11	9	4	12	12'-6	4	6	44	5	12	11	4	16	10	4	12	13	4	17	8	8	9	13'-6	7	9	9'-11	6'-2	3'-9	7	13'-6	7	6	14'-0	7	9	16'-5	5'-1	11'-4	7	14'-0	0.400	0.504	0.723	1.627	339.50
3	12	11	8.5	10.5	11	9	4	12	12'-6	4	6	44	4	12	11	4	17	8	4	12	13	4	16	8	7	6	13'-6	7	9	8'-11	5'-2	3'-9	7	13'-6	7	6	14'-0	7	9	16'-1	4'-9	11'-4	7	14'-0	0.400	0.504	0.723	1.627	332.13
4-8	12	11	8.5	10.5	11	9	4	12	12'-6	4	6	44	4	12	11	4	15	8	4	12	13	4	14	8	7	6	13'-6	6	6	7'-9	4'-7	3'-2	6	13'-6	7	6	14'-0	6	6	15'-9	4'-5	11'-4	6	14'-0	0.400	0.504	0.723	1.627	331.87
9-10	12	11	9	12	11	9	4	12	12'-8	4	6	44	4	12	11	4	12	8	4	12	13	4	12	8	7	6	13'-6	6	6	7'-2	3'-11	3'-3	6	13'-6	7	6	14'-0	6	6	15'-4	3'-11	11'-5	6	14'-0	0.422	0.570	0.723	1.715	326.03
11-15	12	11	10.5	12.5	11	9	5	12	12'-10	4	6	44	4	12	11	4	12	8	4	12	13	4	12	8	9	9	13'-6	7	9	7'-10	3'-11	3'-11	7	13'-6	8	6	14'-0	7	9	15'-5	3'-11	11'-6	7	14'-0	0.486	0.592	0.723	1.801	358.34
16-20	12	11	12.5	15	12	9	4	12	13'-2	4	6	44	4	12	11	4	16	6	4	12	13	4	17	6	8	6	13'-8	6	6	7'-2	3'-7	3'-7	6	13'-8	8	6	14'-2	6	6	15'-4	3'-8	11'-8	6	14'-2	0.580	0.713	0.788	2.081	360.82
21-25	12	11	14.5	17.5	13.5	9	5	12	13'-7	4	6	44	4	12	11	4	16	6	4	12	13	4	17	6	8	6	13'-11	6	6	7'-6	3'-9	3'-9	6	13'-11	8	6	14'-5	6	6	15'-10	3'-11	11'-11	6	14'-5	0.682	0.841	0.886	2.409	379.61
26-30	12	11	16.5	19	14.5	9	6	9	13'-10	4	6	44	4	12	11	4	17	6	4	12	13	4	17	6	8	6	14'-1	7	9	8'-4	3'-11	4'-5	7	14'-1	8	6	14'-7	7	9	16'-0	4'-0	12'-0	7	14'-7	0.781	0.921	0.951	2.653	405.68
31-35	12	11	18	21	16	6	5	6	14'-2	4	6	44	4	12	11	4	18	6	4	12	13	4	12	8	9	6	14'-4	7	9	8'-9	4'-2	4'-7	7	14'-4	9	6	14'-10	7	9	16'-5	4'-3	12'-2	7	14'-10	0.865	1.032	1.049	2.946	460.97
36-40	12	11	19.5	22.5	17	9	4	9	14'-5	4	6	44	4	12	11	4	18	6	5	12	13	4	12	8	9	6	14'-6	8	9	9'-8	4'-3	5'-5	8	14'-6	9	6	15'-0	8	9	16'-9	4'-5	12'-4	8	15'-0	0.946	1.116	1.115	3.177	489.11
41-45	12	11	21	24	18	9	6	9	14'-8	4	6	44	4	12	11	4	12	8	5	12	13	4	13	8	9	6	14'-8	6	6	8'-10	4'-5	4'-5	6	14'-8	9	6	15'-2	6	6	17'-0	4'-7	12'-5	6	15'-2	1.028	1.202	1.180	3.410	484.74
46-50	12	11	22.5	25.5	18.5	9	6	9	14'-11	4	6	44	5	12	11	4	12	8	5	12	13	4	13	8	9	6	14'-9	6	6	9'-2	4'-7	4'-7	6	14'-9	9	6	15'-3	6	6	17'-3	4'-8	12'-7	6	15'-3	1.104	1.281	1.213	3.598	494.50
51-55	12	11	24	27	20	6	4	6	15'-2	4	6	44	5	12	11	4	14	8	5	12	13	4	13	8	9	6	15'-0	9	12	11'-9	5'-0	6'-9	9	15'-0	9	6	15'-6	9	12	17'-7	4'-11	12'-8	9	15'-6	1.197	1.377	1.311	3.885	535.84

BENT BAR DETAIL

BARS	D
6	$4\frac{1}{2}$
7	$5\frac{1}{4}$
8	6
9	$9\frac{1}{2}$

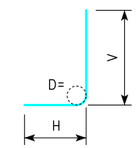

k2 & m2

NOTE:
ALL DIMENSIONS ARE OUT TO OUT.
D = PIN DIAMETER.

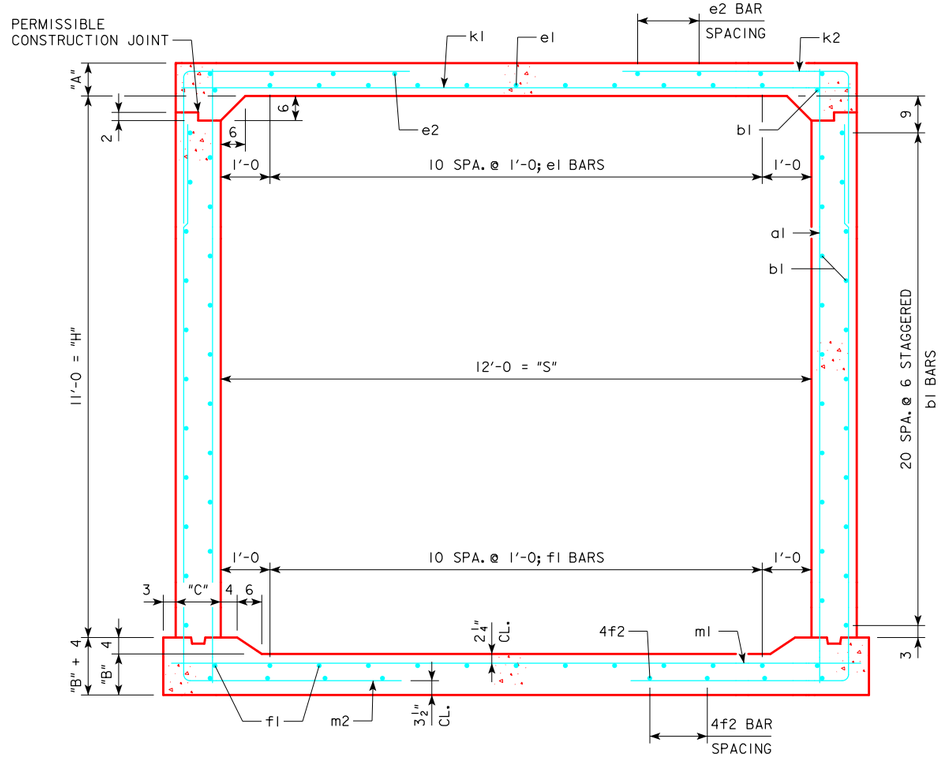

12 x 11 BARREL SECTION

NOTES:

1. DIMENSIONS LISTED ON THIS SHEET TO BE USED IN CONJUNCTION WITH SHEET RCB G2-12.
2. THE k2 AND m2 BARS HORIZONTAL LEGS MAY LAP IN LOW FILL SITUATIONS.
3. DIMENSIONS "A", "B", "C", "D", AND "SP." LISTED IN THE BAR LIST ARE IN INCHES.

LATEST REVISION DATE

APPROVED BY BRIDGE ENGINEER

IOWA DOT Highway Division

STANDARD DESIGN

SINGLE REINFORCED CONCRETE BOX CULVERTS

APRIL, 2012

CULVERT BARREL DETAILS

12 x 11 BARREL SECTIONS

RCB 12-11-12

ENGLISHLRFDSIGNEDSINGLECULVERTS.DGN - RCB 12-11-12 - THIS SHEET ISSUED 04-12.

VARIABLE DIMENSIONS AND QUANTITIES FOR 12 x 12 BARREL SECTIONS

DIMENSIONS							BAR LIST																																				QUANTITIES				
							a1			b1			e1			e2			f1			f2			k1			k2					k9		m1			m2					m9		CONCRETE (CY/FT)				STEEL
FILL	S	H	A	B	C	D	SIZE	SP.	L	SIZE	SP.	NO.	SIZE	SP.	NO.	SIZE	SP.	NO.	SIZE	SP.	NO.	SIZE	SP.	NO.	SIZE	SP.	L	SIZE	SP.	L	H	V	SIZE	L	SIZE	SP.	L	SIZE	SP.	L	H	V	SIZE	L	SLAB	FLOOR	WALLS	TOTAL	(LB/FT)
0	12	12	13.5	14	12	9	5	12	14'-2	4	6	48	5	12	11	4	16	10	4	12	13	4	16	10	6	6	13'-8	6	9	11'-7	7'-11	3'-8	--	--	7	9	14'-2	6	9	20'-6	7'-11	12'-7	--	--	0.623	0.668	0.862	2.153	311.79
1	12	12	12.5	13.5	12	9	5	12	14'-1	4	6	48	5	12	11	4	16	10	4	12	13	4	16	10	7	9	13'-8	6	9	11'-5	7'-11	3'-6	--	--	7	9	14'-2	6	9	20'-6	7'-11	12'-7	--	--	0.580	0.645	0.862	2.087	308.29
2	12	12	8.5	10.5	12	9	4	9	13'-6	4	6	48	5	12	11	4	16	10	4	12	13	4	17	8	8	9	13'-8	7	9	11'-2	7'-5	3'-9	--	--	7	6	14'-2	7	9	17'-7	5'-3	12'-4	7	14'-2	0.407	0.511	0.862	1.780	362.92
3	12	12	8.5	10.5	12	9	4	9	13'-6	4	6	48	4	12	11	4	14	10	4	12	13	4	16	8	7	6	13'-8	6	6	8'-8	5'-6	3'-2	6	13'-8	7	6	14'-2	6	6	17'-2	4'-10	12'-4	6	14'-2	0.407	0.511	0.862	1.780	358.58
4-7	12	12	8.5	10.5	12	9	4	9	13'-6	4	6	48	4	12	11	4	16	8	4	12	13	4	15	8	8	9	13'-8	6	6	8'-1	4'-11	3'-2	6	13'-8	7	6	14'-2	6	6	17'-0	4'-8	12'-4	6	14'-2	0.407	0.511	0.862	1.780	346.95
8-10	12	12	9	11.5	12	9	4	9	13'-7	4	6	48	4	12	11	4	14	8	4	12	13	4	14	8	7	6	13'-8	6	6	7'-7	4'-4	3'-3	6	13'-8	7	6	14'-2	6	6	16'-9	4'-4	12'-5	6	14'-2	0.429	0.556	0.862	1.847	348.24
11-15	12	12	10.5	12.5	12	9	4	9	13'-10	4	6	48	4	12	11	4	13	8	4	12	13	4	13	8	7	6	13'-8	6	6	7'-6	4'-2	3'-4	6	13'-8	8	6	14'-2	6	6	16'-8	4'-2	12'-6	6	14'-2	0.494	0.601	0.862	1.957	365.66
16-20	12	12	12.5	15	13	9	4	9	14'-2	4	6	48	4	12	11	4	18	6	4	12	13	4	12	8	9	9	13'-10	6	6	7'-6	3'-11	3'-7	6	13'-10	8	6	14'-4	6	6	16'-8	4'-0	12'-8	6	14'-4	0.589	0.722	0.934	2.245	374.84
21-25	12	12	14.5	17.5	14.5	9	6	9	14'-7	4	6	48	4	12	11	4	12	8	4	12	13	4	12	8	8	6	14'-1	7	9	8'-6	4'-3	4'-3	7	14'-1	8	6	14'-7	7	9	17'-1	4'-2	12'-11	7	14'-7	0.692	0.852	1.041	2.585	421.11
26-30	12	12	16.5	19	16	9	8	12	14'-10	4	6	48	4	12	11	4	13	8	4	12	13	4	12	8	8	6	14'-4	7	9	8'-10	4'-5	4'-5	7	14'-4	8	6	14'-10	7	9	17'-4	4'-4	13'-0	7	14'-10	0.797	0.939	1.148	2.884	449.74
31-35	12	12	18	21	17.5	9	4	9	15'-2	4	6	48	4	12	11	4	12	8	4	12	13	4	13	8	8	6	14'-7	8	9	9'-9	4'-5	5'-4	8	14'-7	9	6	15'-1	8	9	17'-9	4'-7	13'-2	8	15'-1	0.883	1.052	1.255	3.190	477.26
36-40	12	12	19.5	22.5	18.5	9	7	12	15'-5	4	6	48	4	12	11	4	12	8	5	12	13	4	13	8	9	6	14'-9	6	6	8'-8	4'-7	4'-1	6	14'-9	9	6	15'-3	6	6	18'-1	4'-9	13'-4	6	15'-3	0.965	1.137	1.327	3.429	499.68
41-45	12	12	21	24	19.5	9	8	12	15'-8	4	6	48	4	12	11	4	13	8	5	12	13	4	13	8	9	6	14'-11	6	6	9'-0	4'-9	4'-3	6	14'-11	9	6	15'-5	6	6	18'-4	4'-11	13'-5	6	15'-5	1.048	1.223	1.398	3.669	526.74
46-50	12	12	22.5	25.5	20.5	9	8	12	15'-11	4	6	48	5	12	11	4	13	8	5	12	13	4	14	8	9	6	15'-1	6	6	9'-3	4'-11	4'-4	6	15'-1	9	6	15'-7	6	6	18'-8	5'-1	13'-7	6	15'-7	1.133	1.311	1.470	3.914	538.08
51-55	12	12	24	27	21.5	6	4	6	16'-2	5	6	48	5	12	11	4	13	8	5	12	13	4	14	8	9	6	15'-3	8	9	10'-11	5'-1	5'-10	8	15'-3	9	6	15'-9	8	9	18'-10	5'-2	13'-8	8	15'-9	1.219	1.401	1.541	4.161	567.68

BENT BAR DETAIL

BARS	D
6	$4\frac{1}{2}$
7	$5\frac{1}{4}$
8	6

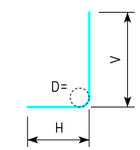

k2 & m2

NOTE:
ALL DIMENSIONS ARE OUT TO OUT.
D = PIN DIAMETER.

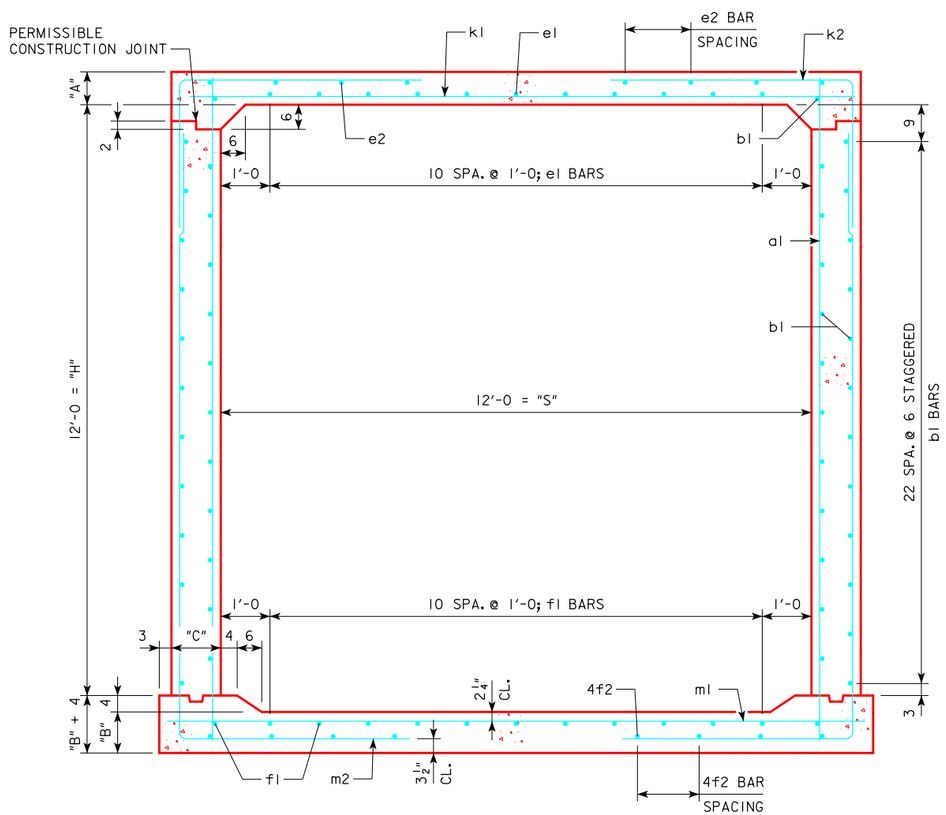

12 x 12 BARREL SECTION

NOTES:

1. DIMENSIONS LISTED ON THIS SHEET TO BE USED IN CONJUNCTION WITH SHEET RCB G2-12.
2. HORIZONTAL LEGS FOR THE k2 AND m2 BARS MAY LAP IN LOW FILL SITUATIONS.
3. DIMENSIONS "A", "B", "C", "D", AND "SP." LISTED IN THE BAR LIST ARE IN INCHES.

LATEST REVISION DATE

APPROVED BY BRIDGE ENGINEER

IOWA DOT Highway Division

STANDARD DESIGN

SINGLE REINFORCED CONCRETE BOX CULVERTS

APRIL, 2012

CULVERT BARREL DETAILS

12 x 12 BARREL SECTIONS

RCB 12-12-12

ENGLISHLRFDSIGNEDSINGLECULVERTS.DGN - RCB 12-12-12 - THIS SHEET ISSUED 04-12.

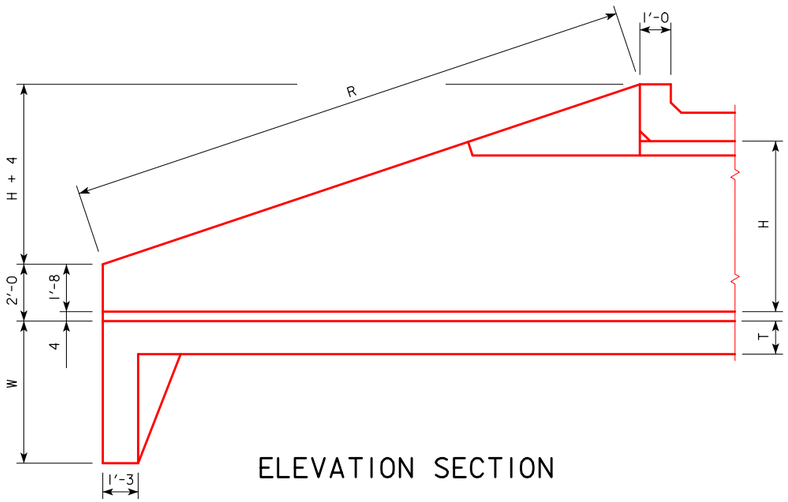

ELEVATION SECTION

DIMENSION TABLE

	S x H	12' x 12'	12' x 11'	12' x 10'	12' x 9'	12' x 8'	12' x 7'	12' x 6'	12' x 5'	12' x 4'	10' x 12'	10' x 11'	10' x 10'	10' x 9'	10' x 8'	10' x 7'	10' x 6'	10' x 5'	10' x 4'	S x H
HEADWALL DIMENSIONS	A	37'-0	34'-0	31'-0	28'-0	25'-0	22'-0	19'-0	16'-0	13'-0	37'-0	34'-0	31'-0	28'-0	25'-0	22'-0	19'-0	16'-0	13'-0	A
	H	12'-0	11'-0	10'-0	9'-0	8'-0	7'-0	6'-0	5'-0	4'-0	12'-0	11'-0	10'-0	9'-0	8'-0	7'-0	6'-0	5'-0	4'-0	H
	P	37'-0	34'-0	31'-0	28'-0	25'-0	22'-0	19'-0	16'-0	13'-0	37'-0	34'-0	31'-0	28'-0	25'-0	22'-0	19'-0	16'-0	13'-0	P
	R	39'-0 1/16	35'-10 1/8	32'-8 1/8	29'-6 3/16	26'-4 1/4	23'-2 5/16	20'-0 3/8	16'-10 7/16	13'-8 1/2	39'-0 1/16	35'-10 1/8	32'-8 1/8	29'-6 3/16	26'-4 1/4	23'-2 5/16	20'-0 3/8	16'-10 7/16	13'-8 1/2	R
	S	12'-0	12'-0	12'-0	12'-0	12'-0	12'-0	12'-0	12'-0	12'-0	10'-0	10'-0	10'-0	10'-0	10'-0	10'-0	10'-0	10'-0	10'-0	S
	T	1'-2	1'-2	1'-2	1'-2	1'-2	1'-2	1'-2	1'-2	1'-2	1'-1	1'-1	1'-1	1'-1	1'-1	1'-1	1'-1	1'-1	1'-1	T
	U	1'-0	1'-0	10	10	10	9	9	9	9	1'-0	1'-0	10	10	10	9	9	9	9	U
	W	5'-0	4'-9	4'-6	4'-3	4'-0	3'-9	3'-6	3'-6	3'-6	5'-0	4'-9	4'-6	4'-3	4'-0	3'-9	3'-6	3'-6	3'-6	W
BAR SPACINGS	M	14'-0	13'-0	11'-0	10'-0	9'-0	8'-0	7'-0	–	–	14'-0	13'-0	11'-0	10'-0	9'-0	8'-0	–	–	–	M
	B	1'-0	1'-0	1'-0	1'-0	1'-0	1'-0	1'-0	1'-0	1'-0	1'-0	1'-0	1'-0	1'-0	1'-0	1'-0	1'-0	1'-0	1'-0	B
	C	6	9	9	1'-0	1'-0	1'-0	1'-0	1'-0	1'-0	6	9	9	1'-0	1'-0	1'-0	1'-0	1'-0	1'-0	C
	D	6	1'-0	1'-0	1'-0	1'-0	1'-0	1'-0	1'-0	1'-0	6	6	1'-0	1'-0	1'-0	1'-0	1'-0	1'-0	1'-0	D
	E	9	9	9	9	9	9	9	9	9	9	9	9	9	9	9	9	9	9	E

DIMENSION TABLE

	S x H	8' x 10'	8' x 9'	8' x 8'	8' x 7'	8' x 6'	8' x 5'	8' x 4'	6' x 8'	6' x 7'	6' x 6'	6' x 5'	6' x 4'	6' x 3'	5' x 6'	5' x 5'	5' x 4'	5' x 3'	4' X 4'	3' x 3'	S x H
HEADWALL DIMENSIONS	A	31'-0	28'-0	25'-0	22'-0	19'-0	16'-0	13'-0	25'-0	22'-0	19'-0	16'-0	13'-0	10'-0	19'-0	16'-0	13'-0	10'-0	13'-0	10'-0	A
	H	10'-0	9'-0	8'-0	7'-0	6'-0	5'-0	4'-0	8'-0	7'-0	6'-0	5'-0	4'-0	3'-0	6'-0	5'-0	4'-0	3'-0	4'-0	3'-0	H
	P	31'-0	28'-0	25'-0	22'-0	19'-0	16'-0	13'-0	25'-0	22'-0	19'-0	16'-0	13'-0	10'-0	19'-0	16'-0	13'-0	10'-0	13'-0	10'-0	P
	R	32'-8 1/8	29'-6 3/16	26'-4 1/4	23'-2 5/16	20'-0 3/8	16'-10 7/16	13'-8 1/2	26'-4 1/4	23'-2 5/16	20'-0 3/8	16'-10 7/16	13'-8 1/2	10'-6 1/2	20'-0 3/8	16'-10 7/16	13'-8 1/2	10'-6 1/2	13'-8 1/2	10'-6 1/2	R
	S	8'-0	8'-0	8'-0	8'-0	8'-0	8'-0	8'-0	6'-0	6'-0	6'-0	6'-0	6'-0	6'-0	5'-0	5'-0	5'-0	5'-0	4'-0	3'-0	S
	T	11	11	11	11	11	11	11	11	11	11	11	11	11	11	11	11	11	11	11	T
	U	10	10	10	9	9	9	9	10	9	9	9	9	9	9	9	9	9	9	9	U
	W	4'-6	4'-3	4'-0	3'-9	3'-6	3'-6	3'-6	4'-0	3'-9	3'-6	3'-6	3'-6	3'-6	3'-6	3'-6	3'-6	3'-6	3'-6	3'-6	W
BAR SPACINGS	M	11'-0	10'-0	9'-0	8'-0	–	–	–	9'-0	8'-0	–	–	–	–	–	–	–	–	–	–	M
	B	1'-0	1'-0	1'-0	1'-0	1'-0	1'-0	1'-0	1'-0	1'-0	1'-0	1'-0	1'-0	1'-0	1'-0	1'-0	1'-0	1'-0	1'-0	1'-0	B
	C	6	9	1'-0	1'-0	1'-0	1'-0	1'-0	1'-0	1'-0	1'-0	1'-0	1'-0	1'-0	1'-0	1'-0	1'-0	1'-0	1'-0	1'-0	C
	D	6	1'-0	1'-0	1'-0	1'-0	1'-0	1'-0	1'-0	1'-0	1'-0	1'-0	1'-0	1'-0	1'-0	1'-0	1'-0	1'-0	1'-0	1'-0	D
	E	1'-0	1'-0	1'-0	1'-0	1'-0	1'-0	1'-0	1'-0	1'-0	1'-0	1'-0	1'-0	1'-0	1'-0	1'-0	1'-0	1'-0	1'-0	1'-0	E

NOTES:

1. SEE DRAWING RCB-G1-12 AND RCB-G2-12 FOR GENERAL NOTES, SPECIFICATIONS, AND DESIGN STRESSES.
2. SEE DRAWING PWH 0-2-12 THRU 0-4-12 FOR LOCATION OF CERTAIN DIMENSIONS TABULATED.
3. SEE DRAWING PWH 0-5-12 THRU PWH 0-9-12 FOR HEADWALL NOTES.

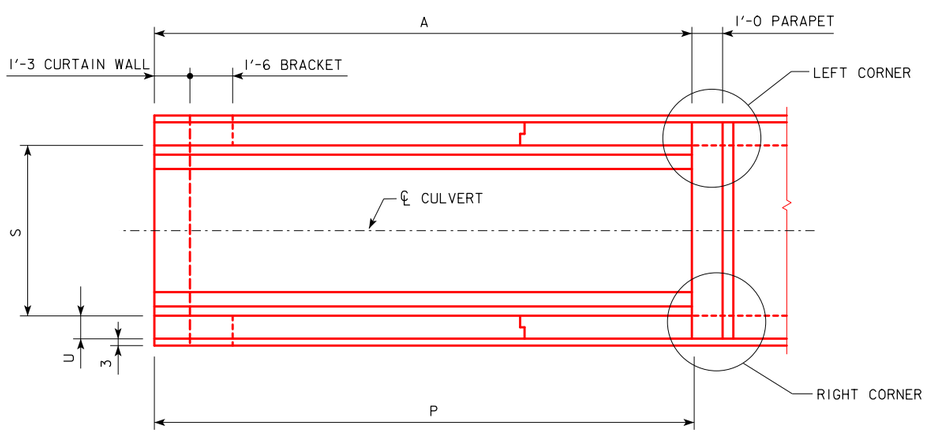

PLAN VIEW

LATEST REVISION DATE

APPROVED BY BRIDGE ENGINEER

IOWA DOT Highway Division

STANDARD DESIGN - SINGLE REINFORCED CONCRETE BOX CULVERTS

PARALLEL WING HEADWALLS

APRIL, 2012

DIMENSION TABLE
0° SKEW

PWH 0-1-12

ENGLISHLRFDSIGNEDSINGLECULVERTS.DGN - PWH 0-1-12 - THIS SHEET ISSUED 04-12.

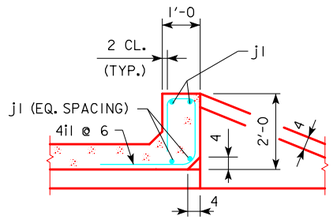

SECTION THRU PARAPET

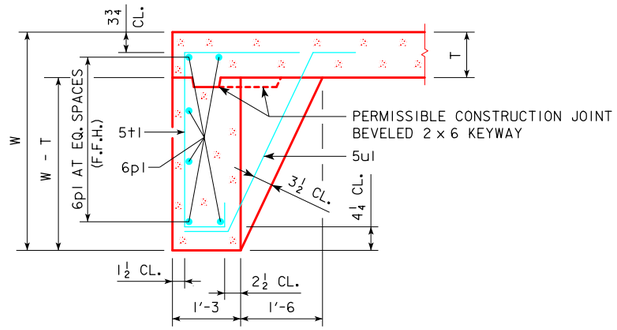

SECTION THRU CURTAIN WALL

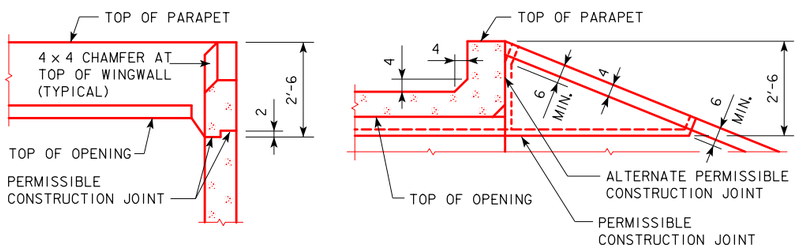

TOP OF WINGWALL DETAILS

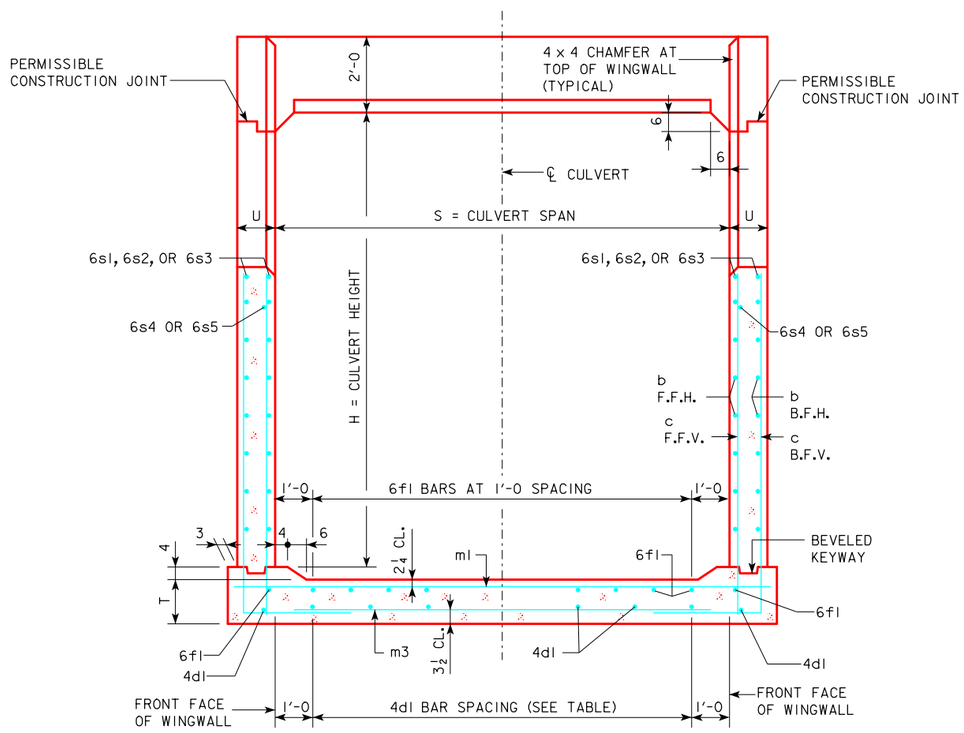

TYPICAL CROSS SECTION - THRU HEADWALL

4d1 BAR SPACING		
SPAN	SPACING	NO. OF BARS
3'-0	1 SPA. AT 1'-0	4
4'-0	2 SPA. AT 1'-0	5
5'-0	2 SPA. AT 1'-6	5
6'-0	3 SPA. AT 1'-4	6
8'-0	4 SPA. AT 1'-6	7
10'-0	6 SPA. AT 1'-4	9
12'-0	8 SPA. AT 1'-3	11

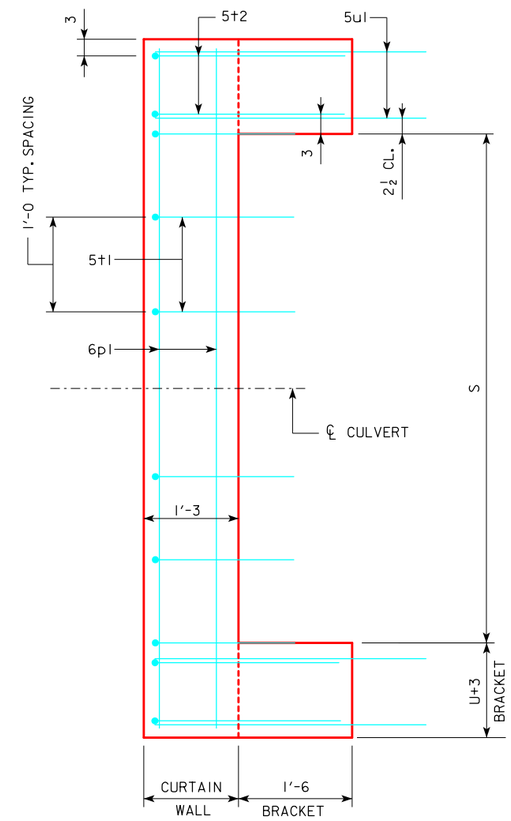

CURTAIN WALL DETAIL - PLAN VIEW

APRON IS NOT SHOWN

NOTES:

1. SEE DRAWING RCB-G1-12 AND RCB-G2-12 FOR GENERAL NOTES, SPECIFICATIONS, AND DESIGN STRESSES.
2. FOR DIMENSION TABLE SEE DRAWING PWH 0-1-12.

LATEST REVISION DATE

APPROVED BY BRIDGE ENGINEER

IOWA DOT Highway Division

STANDARD DESIGN - SINGLE REINFORCED CONCRETE BOX CULVERTS

PARALLEL WING HEADWALLS

APRIL, 2012

CROSS SECTION DETAILS 0° SKEW

PWH 0-2-12

ENGLISHLRFDSIGNEDSINGLECULVERTS.DGN - PWH 0-2-12 - THIS SHEET ISSUED 04-12.

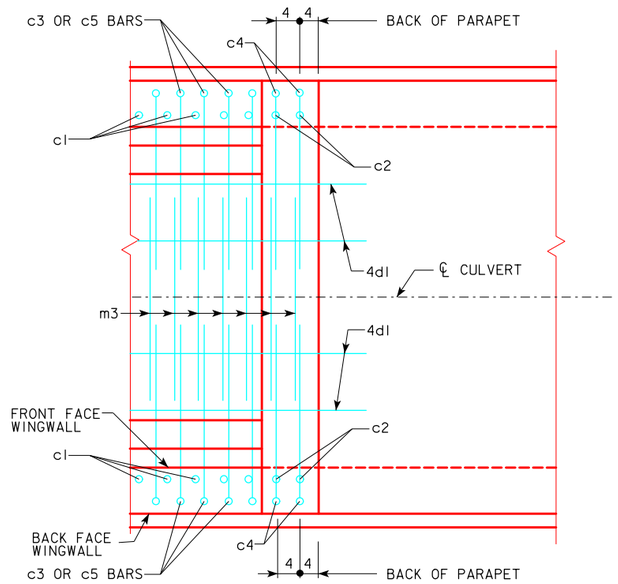

DETAIL A

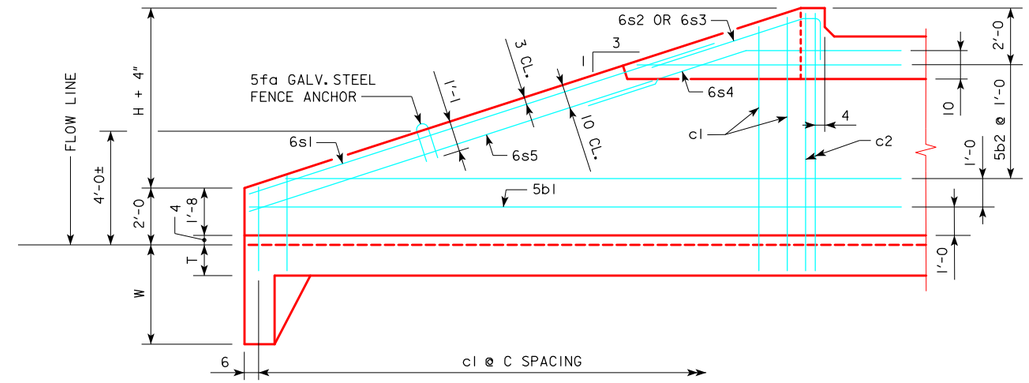

TYPICAL VIEW - FRONT FACE WINGWALL REINFORCING

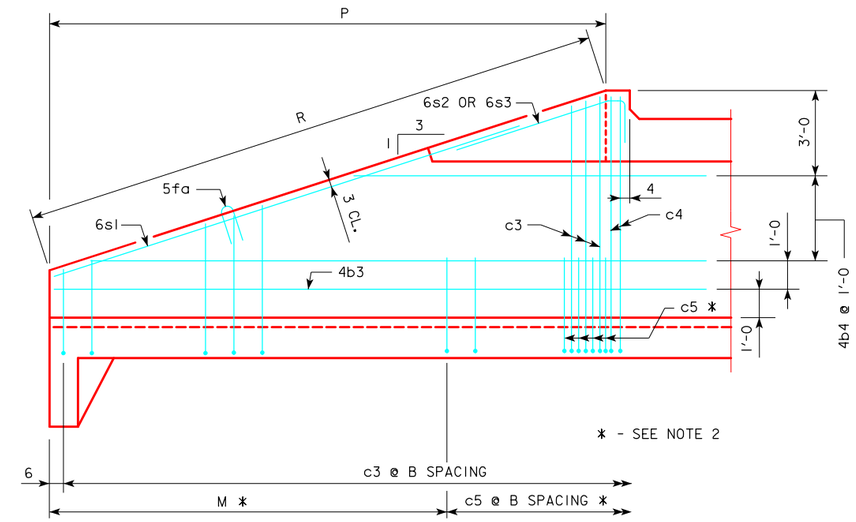

TYPICAL VIEW - BACK FACE WINGWALL REINFORCING

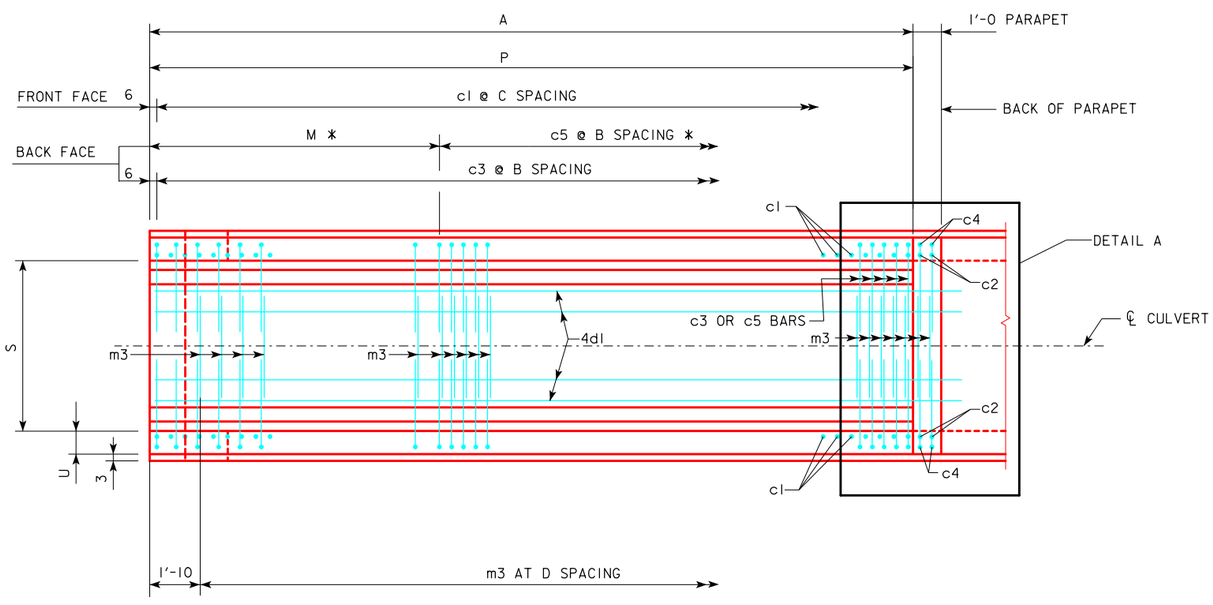

PLAN VIEW - BOTTOM APRON REINFORCING

NOTES :

1. BAR SPACINGS AND POSITIONS SHOWN ARE SIMILAR FOR ALL SIZES OF HEADWALLS IN THIS STANDARD.
2. NOT APPLICABLE FOR THE FOLLOWING HEADWALL SIZES: 12x5, 12x4, 10x6, 10x5, 10x4, 8x6, 8x5, 8x4, 6x6, 6x5, 6x4, 6x3, 5x6, 5x5, 5x4, 5x3, 4x4 AND 3x3.
3. FOR HEADWALL DIMENSIONS AND BAR SPACING SEE DRAWING PWH 0-1-12.
4. WINGWALL BARS CONSISTENTLY REFERENCED FROM END OF WING FOR ALL WINGWALLS.
5. APRON m3 BARS ARE TO BE CENTERED ON ℄ CULVERT.
6. B.F.V. (c4) AND F.F.V. (c2) BARS ARE APPROXIMATELY 4" FROM THE BACK OF PARAPET FOR ALL HEADWALLS.

07-2016
LATEST REVISION DATE

APPROVED BY BRIDGE ENGINEER

IOWA DOT Highway Division

STANDARD DESIGN - SINGLE REINFORCED CONCRETE BOX CULVERTS

PARALLEL WING HEADWALLS

APRIL, 2012

WINGWALL ELEVATIONS & BOTTOM APRON REINFORCING 0° SKEW

PWH 0-3-12

REVISED 07-2016 - CHANGED 10" VERTICAL DIMENSION FROM PERMISSIBLE WALL CONSTRUCTION JOINT TO 6s4 BAR. (DIMENSION WAS 1'-8 VERTICAL FROM TOP OF PARAPET TO 6s4 BAR.)
ENGLISHLRFDSIGNEDSINGLECULVERTS.DGN - PWH 0-3-12 - THIS SHEET ISSUED 04-12.

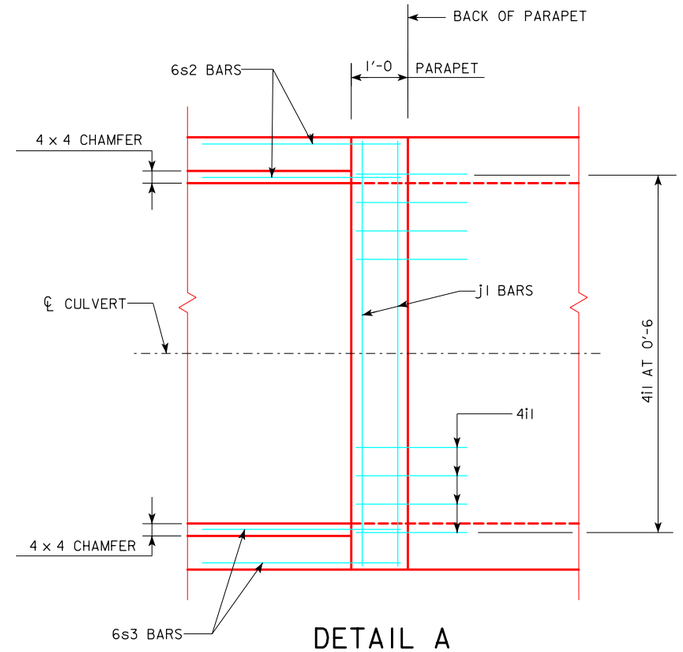

DETAIL A

SHOWING PARAPET BARS ONLY

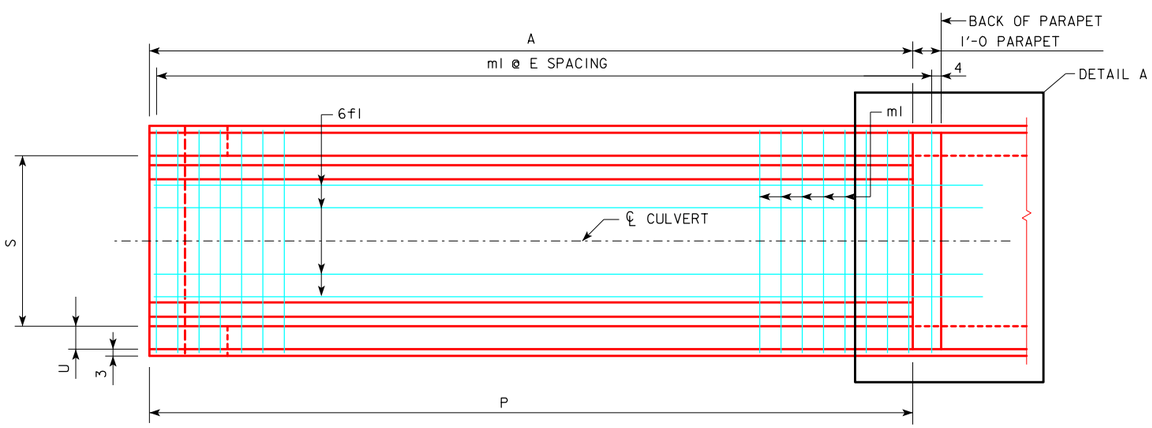

PLAN VIEW - TOP APRON REINFORCING

NOTES :

1. BAR SPACINGS AND POSITIONS SHOWN ARE SIMILAR FOR ALL SIZES OF HEADWALLS IN THIS STANDARD.
2. FOR HEADWALL DIMENSIONS AND BAR SPACING SEE DRAWING PWH 0-1-12.
3. TOP TRANSVERSE APRON BARS ARE REFERENCED APPROXIMATELY 4" FROM THE BACK OF THE PARAPET FOR ALL HEADWALLS.

LATEST REVISION DATE

APPROVED BY BRIDGE ENGINEER

IOWADOT Highway Division

STANDARD DESIGN - SINGLE REINFORCED CONCRETE BOX CULVERTS

PARALLEL WING HEADWALLS

APRIL, 2012

PARAPET REINFORCING & TOP APRON REINFORCING 0° SKEW

PWH 0-4-12

ENGLISHLRFDSIGNEDSINGLECULVERTS.DGN - PWH 0-4-12 - THIS SHEET ISSUED 04-12.

BILL OF REINFORCING FOR ONE HEADWALL 0° SKEW CULVERT SPAN x CULVERT HEIGHT

LOCATION	SHAPE	12′ x 12′				12′ x 11′				12′ x 10′			
		BAR	NO.	LENGTH	WT.	BAR	NO.	LENGTH	WT.	BAR	NO.	LENGTH	WT.
FENCE ANCHOR (GALV.)		5fa	2	2′-10	6	5fa	2	2′-10	6	5fa	2	2′-10	6
WINGWALL, F.F.H.		5b1	2	39′-10	83	5b1	2	36′-10	77	5b1	2	33′-10	71
WINGWALL, F.F.H.		5b2	22 VAR	2 EACH 8′-10:38′-10	547	5b2	20 VAR	2 EACH 8′-10:35′-10	466	5b2	18 VAR	2 EACH 8′-10:32′-10	391
WINGWALL, B.F.H.		4b3	2	39′-10	53	4b3	2	36′-10	49	4b3	2	33′-10	45
WINGWALL, B.F.H.		4b4	20 VAR	2 EACH 11′-10:38′-10	338	4b4	18 VAR	2 EACH 11′-10:35′-10	287	4b4	16 VAR	2 EACH 11′-10:32′-10	239
WINGWALL, F.F.V.		5c1	148 VAR	2 EACH 2′-9:14′-11	1364	5c1	90 VAR	2 EACH 2′-9:13′-9	774	5c1	82 VAR	2 EACH 2′-9:12′-9	663
WINGWALL, F.F.V. (L)		5c2	2	15′-0	31	5c2	2	14′-0	29	5c2	2	13′-0	27
WINGWALL, F.F.V. (R)		5c2	2	15′-0	31	5c2	2	14′-0	29	5c2	2	13′-0	27
WINGWALL, B.F.V.		6c3	74 VAR	2 EACH 6′-4:18′-4	1371	5c3	68 VAR	2 EACH 6′-4:17′-4	839	5c3	62 VAR	2 EACH 6′-4:16′-4	733
WINGWALL, B.F.V. (L)		6c4	2	18′-6	56	5c4	2	17′-6	37	5c4	2	16′-6	34
WINGWALL, B.F.V. (R)		6c4	2	18′-6	56	5c4	2	17′-6	37	5c4	2	16′-6	34
WINGWALL, B.F.V.		6c5	48	8′-6	613	5c5	44	8′-6	390	5c5	42	8′-6	372
APRON, LONGIT., BOTT.		4d1	11	39′-10	293	4d1	11	36′-10	271	4d1	11	33′-10	249
APRON, LONGIT., TOP		6f1	13	39′-10	778	6f1	13	36′-10	719	6f1	13	33′-10	661
PARAPET, VERTICAL		4i1	25	6′-5	107	4i1	25	6′-5	107	4i1	25	6′-5	107
PARAPET, HORIZ.		7j1	4	13′-8	112	7j1	4	13′-8	112	7j1	4	13′-4	109
APRON, TRANS., TOP		6m1	51	14′-2	1085	6m1	47	14′-2	1000	6m1	43	13′-10	893
APRON, TRANS., TOP		m2	—	—	—	m2	—	—	—	m2	—	—	—
APRON, TRANS., BOTT.		5m3	73	10′-11	831	6m3	34	11′-9	600	5m3	31	10′-7	342
CURTAIN, HORIZ.		6p1	6	14′-2	128	6p1	6	14′-2	128	6p1	6	13′-10	125
WING SLOPE, BOTH F.		6s1	4	35′-8	214	6s1	4	32′-6	195	6s1	4	29′-4	176
WING SLOPE, BOTH F. (L)		6s2	2	7′-9	23	6s2	2	7′-9	23	6s2	2	7′-9	23
WING SLOPE, BOTH F. (R)		6s3	2	7′-9	23	6s3	2	7′-9	23	6s3	2	7′-9	23
WING SLOPE, F. F.		6s4	2	11′-0	33	6s4	2	11′-0	33	6s4	2	11′-0	33
WING SLOPE, F. F.		6s5	2	33′-5	100	6s5	2	30′-3	91	6s5	2	27′-1	81
CURTAIN, VERT.		5t1	13	7′-11	107	5t1	13	7′-8	104	5t1	13	7′-5	101
CURTAIN, VERT., ENDS		5t2	4	7′-11	33	5t2	4	7′-8	32	5t2	4	7′-5	31
BRACKET, VERT.		5u1	4	6′-8	28	5u1	4	6′-5	27	5u1	4	6′-2	26

LOCATION	12′ x 9′				12′ x 8′				12′ x 7′			
	BAR	NO.	LENGTH	WT.	BAR	NO.	LENGTH	WT.	BAR	NO.	LENGTH	WT.
FENCE ANCHOR (GALV.)	5fa	2	2′-10	6	5fa	2	2′-10	6	5fa	2	2′-10	6
WINGWALL, F.F.H.	5b1	2	30′-10	64	5b1	2	27′-10	58	5b1	2	24′-10	52
WINGWALL, F.F.H.	5b2	16 VAR	2 EACH 8′-10:29′-10	323	5b2	14 VAR	2 EACH 8′-10:26′-10	260	5b2	12 VAR	2 EACH 8′-10:23′-10	204
WINGWALL, B.F.H.	4b3	2	30′-10	41	4b3	2	27′-10	37	4b3	2	24′-10	33
WINGWALL, B.F.H.	4b4	14 VAR	2 EACH 11′-10:29′-10	195	4b4	12 VAR	2 EACH 11′-10:26′-10	155	4b4	10 VAR	2 EACH 11′-10:23′-10	119
WINGWALL, F.F.V.	5c1	56 VAR	2 EACH 2′-9:11′-9	423	4c1	50 VAR	2 EACH 2′-9:10′-9	225	4c1	44 VAR	2 EACH 2′-9:9′-9	184
WINGWALL, F.F.V. (L)	5c2	2	12′-0	25	4c2	2	11′-0	15	4c2	2	10′-0	13
WINGWALL, F.F.V. (R)	5c2	2	12′-0	25	4c2	2	11′-0	15	4c2	2	10′-0	13
WINGWALL, B.F.V.	5c3	56 VAR	2 EACH 6′-4:15′-4	633	5c3	50 VAR	2 EACH 6′-4:14′-4	539	5c3	44 VAR	2 EACH 6′-4:13′-4	451
WINGWALL, B.F.V. (L)	5c4	2	15′-6	32	5c4	2	14′-6	30	5c4	2	13′-6	28
WINGWALL, B.F.V. (R)	5c4	2	15′-6	32	5c4	2	14′-6	30	5c4	2	13′-6	28
WINGWALL, B.F.V.	5c5	38	8′-6	337	5c5	34	8′-6	301	5c5	30	8′-6	266
APRON, LONGIT., BOTT.	4d1	11	30′-10	227	4d1	11	27′-10	205	4d1	11	24′-10	182
APRON, LONGIT., TOP	6f1	13	30′-10	602	6f1	13	27′-10	543	6f1	13	24′-10	485
PARAPET, VERTICAL	4i1	25	6′-5	107	4i1	25	6′-5	107	4i1	25	6′-5	107
PARAPET, HORIZ.	7j1	4	13′-4	109	7j1	4	13′-4	109	7j1	4	13′-2	108
APRON, TRANS., TOP	6m1	39	13′-10	810	6m1	35	13′-10	727	6m1	31	13′-8	636
APRON, TRANS., TOP	m2	—	—	—	m2	—	—	—	m2	—	—	—
APRON, TRANS., BOTT.	5m3	28	10′-7	309	4m3	25	9′-9	163	4m3	22	9′-7	141
CURTAIN, HORIZ.	6p1	6	13′-10	125	6p1	6	13′-10	125	6p1	5	13′-8	103
WING SLOPE, BOTH F.	6s1	4	26′-2	157	6s1	4	23′-0	138	6s1	4	19′-10	119
WING SLOPE, BOTH F. (L)	6s2	2	7′-9	23	6s2	2	7′-9	23	6s2	2	7′-9	23
WING SLOPE, BOTH F. (R)	6s3	2	7′-9	23	6s3	2	7′-9	23	6s3	2	7′-9	23
WING SLOPE, F. F.	6s4	2	11′-0	33	6s4	2	11′-0	33	6s4	2	11′-0	33
WING SLOPE, F. F.	6s5	2	23′-11	72	6s5	2	20′-9	62	6s5	2	17′-7	53
CURTAIN, VERT.	5t1	13	7′-2	97	5t1	13	6′-11	94	5t1	13	6′-8	90
CURTAIN, VERT., ENDS	5t2	4	7′-2	30	5t2	4	6′-11	29	5t2	4	6′-8	28
BRACKET, VERT.	5u1	4	6′-0	25	5u1	4	5′-9	24	5u1	4	5′-7	23

LOCATION	12′ x 6′				12′ x 5′				12′ x 4′			
	BAR	NO.	LENGTH	WT.	BAR	NO.	LENGTH	WT.	BAR	NO.	LENGTH	WT.
FENCE ANCHOR (GALV.)	5fa	2	2′-10	6	5fa	2	2′-10	6	5fa	2	2′-10	6
WINGWALL, F.F.H.	5b1	2	21′-10	46	5b1	2	18′-10	39	5b1	2	15′-10	33
WINGWALL, F.F.H.	5b2	10 VAR	2 EACH 8′-10:20′-10	155	5b2	8 VAR	2 EACH 8′-10:17′-10	111	5b2	6 VAR	2 EACH 8′-10:14′-10	74
WINGWALL, B.F.H.	4b3	2	21′-10	29	4b3	2	18′-10	25	4b3	2	15′-10	21
WINGWALL, B.F.H.	4b4	8 VAR	2 EACH 11′-10:20′-10	87	4b4	6 VAR	2 EACH 11′-10:17′-10	59	4b4	4 VAR	2 EACH 11′-10:14′-10	36
WINGWALL, F.F.V.	4c1	38 VAR	2 EACH 2′-9:8′-9	146	4c1	32 VAR	2 EACH 2′-9:7′-9	112	4c1	26 VAR	2 EACH 2′-9:6′-9	82
WINGWALL, F.F.V. (L)	4c2	2	9′-0	12	4c2	2	8′-0	11	4c2	2	7′-0	9
WINGWALL, F.F.V. (R)	4c2	2	9′-0	12	4c2	2	8′-0	11	4c2	2	7′-0	9
WINGWALL, B.F.V.	5c3	38 VAR	2 EACH 6′-4:12′-4	370	6c3	32 VAR	2 EACH 6′-4:11′-4	425	6c3	26 VAR	2 EACH 6′-4:10′-4	325
WINGWALL, B.F.V. (L)	5c4	2	12′-6	26	6c4	2	11′-6	35	6c4	2	10′-6	32
WINGWALL, B.F.V. (R)	5c4	2	12′-6	26	6c4	2	11′-6	35	6c4	2	10′-6	32
WINGWALL, B.F.V.	5c5	26	8′-6	231	c5	—	—	—	c5	—	—	—
APRON, LONGIT., BOTT.	4d1	11	21′-10	160	4d1	11	18′-10	138	4d1	11	15′-10	116
APRON, LONGIT., TOP	6f1	13	21′-10	426	6f1	13	18′-10	368	6f1	13	15′-10	309
PARAPET, VERTICAL	4i1	25	6′-5	107	4i1	25	6′-5	107	4i1	25	6′-5	107
PARAPET, HORIZ.	7j1	4	13′-2	108	7j1	4	13′-2	108	7j1	4	13′-2	108
APRON, TRANS., TOP	6m1	27	13′-8	554	6m1	23	13′-8	472	6m1	19	13′-8	390
APRON, TRANS., TOP	m2	—	—	—	m2	—	—	—	m2	—	—	—
APRON, TRANS., BOTT.	4m3	19	9′-7	122	4m3	16	9′-7	102	4m3	13	9′-7	83
CURTAIN, HORIZ.	6p1	5	13′-8	103	6p1	5	13′-8	103	6p1	5	13′-8	103
WING SLOPE, BOTH F.	6s1	4	16′-8	100	6s1	4	13′-7	82	6s1	4	10′-5	63
WING SLOPE, BOTH F. (L)	6s2	2	7′-9	23	6s2	2	7′-9	23	6s2	2	7′-9	23
WING SLOPE, BOTH F. (R)	6s3	2	7′-9	23	6s3	2	7′-9	23	6s3	2	7′-9	23
WING SLOPE, F. F.	6s4	2	11′-0	33	6s4	2	11′-0	33	6s4	2	11′-0	33
WING SLOPE, F. F.	6s5	2	14′-5	43	6s5	2	11′-3	34	6s5	2	8′-1	24
CURTAIN, VERT.	5t1	13	6′-5	87	5t1	13	6′-5	87	5t1	13	6′-5	87
CURTAIN, VERT., ENDS	5t2	4	6′-5	27	5t2	4	6′-5	27	5t2	4	6′-5	27
BRACKET, VERT.	5u1	4	5′-4	22	5u1	4	5′-4	22	5u1	4	5′-4	22

ESTIMATED QUANTITIES ONE HEADWALL		12′ x 12′			12′ x 11′			12′ x 10′			12′ x 9′		
REINF. STEEL		8444 LBS.			6485 LBS.			5622 LBS.			4885 LBS.		
CONCRETE	PARAPET △	1.7	51.7 CU.YD.	PARAPET △	1.7	46.4 CU.YD.	PARAPET △	1.5	37.9 CU.YD.	PARAPET △	1.5	33.6 CU.YD.	
	WINGWALLS	21.8		WINGWALLS	18.7		WINGWALLS	13.2		WINGWALLS	11.0		
	APRON	28.2		APRON	26.0		APRON	23.2		APRON	21.1		

ESTIMATED QUANTITIES ONE HEADWALL	12′ x 8′			12′ x 7′			12′ x 6′			12′ x 5′			12′ x 4′		
REINF. STEEL	4076 LBS.			3551 LBS.			3084 LBS.			2598 LBS.			2177 LBS.		
CONCRETE	PARAPET △	1.5	29.4 CU.YD.	PARAPET △	1.5	24.5 CU.YD.	PARAPET △	1.5	21.0 CU.YD.	PARAPET △	1.5	17.7 CU.YD.	PARAPET △	1.5	14.6 CU.YD.
	WINGWALLS	9.0		WINGWALLS	6.4		WINGWALLS	5.0		WINGWALLS	3.7		WINGWALLS	2.5	
	APRON	18.9		APRON	16.6		APRON	14.5		APRON	12.5		APRON	10.6	

△ INCLUDES TOP OF WINGWALL QUANTITIES.

NOTE: WEIGHT OF BARS OVER 40′-0 LONG INCLUDE AN ALLOWANCE OF 2′-0 FOR LAP.

(L) - INDICATES BAR LOCATED AT LEFT CORNER.
(R) - INDICATES BAR LOCATED AT RIGHT CORNER.
REFER TO SHEET PWH 0-1-12 FOR LEFT AND RIGHT CORNER LOCATIONS.

BENT BAR DETAILS

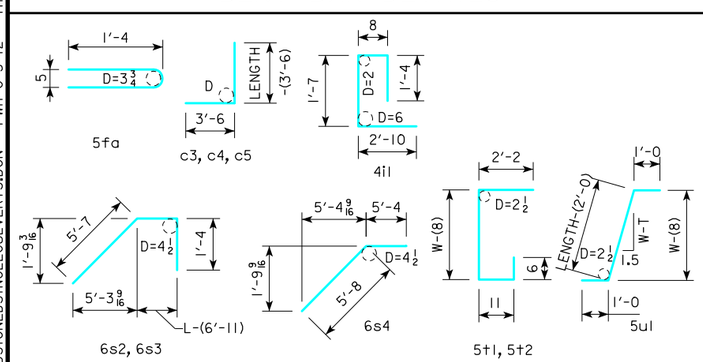

NOTE: ALL DIMENSIONS ARE OUT TO OUT
D = PIN DIAMETER
SEE TABLE AT RIGHT FOR PIN DIAMETER "D" OF c BARS

c BAR PIN DIAMETER	
BAR SIZE	D
4	3
5	3¾
6	4½

HEADWALL NOTES:

THIS HEADWALL IS BASED ON A 3:1 SLOPE NORMAL TO CENTERLINE OF ROADWAY.

THE SIDES OF THE FOOTING ARE TO BE FORMED TO INSURE CORRECT LINE AND GRADE.

ALL EXPOSED CORNERS OF 90° OR SHARPER ARE TO BE FILLETED WITH A ¾" DRESSED AND BEVELED STRIP.

ALL REINFORCING IS TO BE SECURELY WIRED IN PLACE BEFORE THE CONCRETE IS POURED. ALL SLAB AND FLOOR REINFORCING STEEL IS TO BE SUPPORTED BY BAR CHAIRS AT INTERVALS OF NOT MORE THAN 3′-0 IN EITHER DIRECTION AS OUTLINED IN THE STANDARD SPECIFICATIONS.

CLEAR DISTANCE FROM FACE OF CONCRETE TO NEAR REINFORCING BAR IS TO BE 2" UNLESS OTHERWISE NOTED OR SHOWN. CLEARANCE TO THE BOTTOM ENDS OF VERTICAL BARS SHALL BE 3 INCHES.

CONCRETE QUANTITIES ARE ESTIMATED FROM BACK OF PARAPET.

HORIZONTAL TAILS OF BARS "b" & "s" ESTIMATED TO EXTEND 2′-0 BEYOND BACK OF PARAPET (INTO END OF BARREL). LONGITUDINAL BARS "4d1" AND "6f1" ESTIMATED TO PROJECT INTO END SECTION OF BARREL A MINIMUM OF 2′-0 BEYOND BACK OF PARAPET. THE "LENGTH" COLUMN REFLECTS TOTAL NUMBER OF FEET NECESSARY TO MEET THESE REQUIREMENTS.

07-2016
LATEST REVISION DATE

APPROVED BY BRIDGE ENGINEER

IOWA DOT Highway Division

STANDARD DESIGN - SINGLE REINFORCED CONCRETE BOX CULVERTS

PARALLEL WING HEADWALLS

APRIL, 2012

QUANTITY TABULATION
12′-0 SPAN
0° SKEW

PWH 0-5-12

REVISED 07-2016 - CHANGED FENCE ANCHOR BAR (5fa) FROM 3′-1 TO 2′-10.
ENGLISHLRFDSIGNEDSINGLECULVERTS.DGN - PWH 0-5-12 - THIS SHEET ISSUED 04-12.

BILL OF REINFORCING FOR ONE HEADWALL 0° SKEW CULVERT SPAN x CULVERT HEIGHT

LOCATION	SHAPE	10′ x 12′				10′ x 11″				10′ x 10′				10′ x 9′			
		BAR	NO.	LENGTH	WT.	BAR	NO.	LENGTH	WT.	BAR	NO.	LENGTH	WT.	BAR	NO.	LENGTH	WT.
FENCE ANCHOR (GALV.)		5fa	2	2′-10	6	5fa	2	2′-10	6	5fa	2	2′-10	6	5fa	2	2′-10	6
WINGWALL, F.F.H.		5b1	2	39′-10	83	5b1	2	36′-10	77	5b1	2	33′-10	71	5b1	2	30′-10	64
WINGWALL, F.F.H.		5b2	22 VAR	2 EACH 8′-10:38′-10	547	5b2	20 VAR	2 EACH 8′-10:35′-10	466	5b2	18 VAR	2 EACH 8′-10:32′-10	391	5b2	16 VAR	2 EACH 8′-10:29′-10	323
WINGWALL, B.F.H.		4b3	2	39′-10	53	4b3	2	36′-10	49	4b3	2	33′-10	45	4b3	2	30′-10	41
WINGWALL, B.F.H.		4b4	20 VAR	2 EACH 11′-10:38′-10	338	4b4	18 VAR	2 EACH 11′-10:35′-10	287	4b4	16 VAR	2 EACH 11′-10:32′-10	239	4b4	14 VAR	2 EACH 11′-10:29′-10	195
WINGWALL, F.F.V.		5c1	148 VAR	2 EACH 2′-8:14′-10	1351	5c1	90 VAR	2 EACH 2′-8:13′-8	767	5c1	82 VAR	2 EACH 2′-8:12′-8	656	5c1	56 VAR	2 EACH 2′-8:11′-8	419
WINGWALL, F.F.V. (L)		5c2	2	14′-11	31	5c2	2	13′-11	29	5c2	2	12′-11	27	5c2	2	11′-11	25
WINGWALL, F.F.V. (R)		5c2	2	14′-11	31	5c2	2	13′-11	29	5c2	2	12′-11	27	5c2	2	11′-11	25
WINGWALL, B.F.V.		6c3	74 VAR	2 EACH 6′-3:18′-3	1362	5c3	68 VAR	2 EACH 6′-3:17′-3	833	5c3	62 VAR	2 EACH 6′-3:16′-3	727	5c3	56 VAR	2 EACH 6′-3:15′-3	628
WINGWALL, B.F.V. (L)		6c4	2	18′-5	55	5c4	2	17′-5	36	5c4	2	16′-5	34	5c4	2	15′-5	32
WINGWALL, B.F.V. (R)		6c4	2	18′-5	55	5c4	2	17′-5	36	5c4	2	16′-5	34	5c4	2	15′-5	32
WINGWALL, B.F.V.		6c5	48	8′-6	613	5c5	44	8′-6	390	5c5	42	8′-6	372	5c5	38	8′-6	337
APRON, LONGIT., BOTT.		4d1	9	39′-10	239	4d1	9	36′-10	221	4d1	9	33′-10	203	4d1	9	30′-10	185
APRON, LONGIT., TOP		6f1	11	39′-10	658	6f1	11	36′-10	609	6f1	11	33′-10	559	6f1	11	30′-10	509
PARAPET, VERTICAL		4i1	21	6′-5	90	4i1	21	6′-5	90	4i1	21	6′-5	90	4i1	21	6′-5	90
PARAPET, HORIZ.		7j1	4	11′-8	95	7j1	4	11′-8	95	7j1	4	11′-4	93	7j1	4	11′-4	93
APRON, TRANS., TOP		6m1	51	12′-2	923	6m1	47	12′-2	859	6m1	43	11′-10	764	6m1	39	11′-10	693
APRON, TRANS., TOP		m2	—	—	—	m2	—	—	—	m2	—	—	—	m2	—	—	—
APRON, TRANS., BOTT.		5m3	73	8′-11	679	5m3	67	8′-11	623	6m3	31	9′-5	438	6m3	28	9′-5	396
CURTAIN, HORIZ.		6p1	6	12′-2	110	6p1	6	12′-2	110	6p1	6	11′-10	107	6p1	6	11′-10	107
WING SLOPE, BOTH F.		6s1	4	35′-8	214	6s1	4	32′-6	195	6s1	4	29′-4	176	6s1	4	26′-2	157
WING SLOPE, BOTH F. (L)		6s2	2	7′-9	23	6s2	2	7′-9	23	6s2	2	7′-9	23	6s2	2	7′-9	23
WING SLOPE, BOTH F. (R)		6s3	2	7′-9	23	6s3	2	7′-9	23	6s3	2	7′-9	23	6s3	2	7′-9	23
WING SLOPE, F. F.		6s4	2	11′-0	33	6s4	2	11′-0	33	6s4	2	11′-0	33	6s4	2	11′-0	33
WING SLOPE, F. F.		6s5	2	33′-5	100	6s5	2	30′-3	91	6s5	2	27′-1	81	6s5	2	23′-11	72
CURTAIN, VERT.		5t1	11	7′-11	91	5t1	11	7′-8	88	5t1	11	7′-5	85	5t1	11	7′-2	82
CURTAIN, VERT., ENDS		5t2	4	7′-11	33	5t2	4	7′-8	32	5t2	4	7′-5	31	5t2	4	7′-2	30
BRACKET, VERT.		5u1	4	6′-8	28	5u1	4	6′-5	27	5u1	4	6′-2	26	5u1	4	6′-0	25
ESTIMATED QUANTITIES ONE HEADWALL	REINF. STEEL	7873 LBS.				6124 LBS.				5361 LBS.				4645 LBS.			
	CONCRETE	PARAPET Δ	1.5	46.5 CU.YD.		PARAPET Δ	1.5	41.6 CU.YD.		PARAPET Δ	1.4	33.6 CU.YD.		PARAPET Δ	1.4	29.6 CU.YD.	
		WINGWALLS	21.8			WINGWALLS	18.7			WINGWALLS	13.2			WINGWALLS	11.0		
		APRON	23.2			APRON	21.4			APRON	19.0			APRON	17.2		

LOCATION	10′ x 8′				10′ x 7′				10′ x 6′				10′ x 5′				10′ x 4′			
	BAR	NO.	LENGTH	WT.	BAR	NO.	LENGTH	WT.	BAR	NO.	LENGTH	WT.	BAR	NO.	LENGTH	WT.	BAR	NO.	LENGTH	WT.
FENCE ANCHOR (GALV.)	5fa	2	2′-10	6	5fa	2	2′-10	6	5fa	2	2′-10	6	5fa	2	2′-10	6	5fa	2	2′-10	6
WINGWALL, F.F.H.	5b1	2	27′-10	58	5b1	2	24′-10	52	5b1	2	21′-10	46	5b1	2	18′-10	39	5b1	2	15′-10	33
WINGWALL, F.F.H.	5b2	14 VAR	2 EACH 8′-10:26′-10	260	5b2	12 VAR	2 EACH 8′-10:23′-10	204	5b2	10 VAR	2 EACH 8′-10:20′-10	155	5b2	8 VAR	2 EACH 8′-10:17′-10	111	5b2	6 VAR	2 EACH 8′-10:14′-10	74
WINGWALL, B.F.H.	4b3	2	27′-10	37	4b3	2	24′-10	33	4b3	2	21′-10	29	4b3	2	18′-10	25	4b3	2	15′-10	21
WINGWALL, B.F.H.	4b4	12 VAR	2 EACH 11′-10:26′-10	155	4b4	10 VAR	2 EACH 11′-10:23′-10	119	4b4	8 VAR	2 EACH 11′-10:20′-10	87	4b4	6 VAR	2 EACH 11′-10:17′-10	59	4b4	4 VAR	2 EACH 11′-10:14′-10	36
WINGWALL, F.F.V.	5c1	50 VAR	2 EACH 2′-8:10′-8	348	4c1	44 VAR	2 EACH 2′-8:9′-8	181	4c1	38 VAR	2 EACH 2′-8:8′-8	144	4c1	32 VAR	2 EACH 2′-8:7′-8	110	4c1	26 VAR	2 EACH 2′-8:6′-8	81
WINGWALL, F.F.V. (L)	5c2	2	10′-11	23	4c2	2	9′-11	13	4c2	2	8′-11	12	4c2	2	7′-11	11	4c2	2	6′-11	9
WINGWALL, F.F.V. (R)	5c2	2	10′-11	23	4c2	2	9′-11	13	4c2	2	8′-11	12	4c2	2	7′-11	11	4c2	2	6′-11	9
WINGWALL, B.F.V.	5c3	50 VAR	2 EACH 6′-3:14′-3	535	5c3	44 VAR	2 EACH 6′-3:13′-3	447	6c3	38 VAR	2 EACH 6′-3:12′-3	528	6c3	32 VAR	2 EACH 6′-3:11′-3	421	5c3	26 VAR	2 EACH 6′-3:10′-3	224
WINGWALL, B.F.V. (L)	5c4	2	14′-5	30	5c4	2	13′-5	28	6c4	2	12′-5	37	6c4	2	11′-5	34	5c4	2	10′-5	22
WINGWALL, B.F.V. (R)	5c4	2	14′-5	30	5c4	2	13′-5	28	6c4	2	12′-5	37	6c4	2	11′-5	34	5c4	2	10′-5	22
WINGWALL, B.F.V.	5c5	34	8′-6	301	5c5	30	8′-6	266	c5	—	—	—	c5	—	—	—	c5	—	—	—
APRON, LONGIT., BOTT.	4d1	9	27′-10	167	4d1	9	24′-10	149	4d1	9	21′-10	131	4d1	9	18′-10	113	4d1	9	15′-10	95
APRON, LONGIT., TOP	6f1	11	27′-10	460	6f1	11	24′-10	410	6f1	11	21′-10	361	6f1	11	18′-10	311	6f1	11	15′-10	262
PARAPET, VERTICAL	4i1	21	6′-5	90	4i1	21	6′-5	90	4i1	21	6′-5	90	4i1	21	6′-5	90	4i1	21	6′-5	90
PARAPET, HORIZ.	7j1	4	11′-4	93	7j1	4	11′-2	91	7j1	4	11′-2	91	7j1	4	11′-2	91	7j1	4	11′-2	91
APRON, TRANS., TOP	6m1	35	11′-10	622	6m1	31	11′-8	543	6m1	27	11′-8	473	6m1	23	11′-8	403	6m1	19	11′-8	333
APRON, TRANS., TOP	m2	—	—	—	m2	—	—	—	m2	—	—	—	m2	—	—	—	m2	—	—	—
APRON, TRANS., BOTT.	6m3	25	8′-7	224	5m3	22	7′-7	111	4m3	19	7′-7	96	4m3	16	7′-7	81	4m3	13	7′-7	66
CURTAIN, HORIZ.	6p1	6	11′-10	107	6p1	5	11′-8	88	6p1	5	11′-8	88	6p1	5	11′-8	88	6p1	5	11′-8	88
WING SLOPE, BOTH F.	6s1	4	23′-0	138	6s1	4	19′-10	119	6s1	4	16′-8	100	6s1	4	13′-7	82	6s1	4	10′-5	63
WING SLOPE, BOTH F. (L)	6s2	2	7′-9	23	6s2	2	7′-9	23	6s2	2	7′-9	23	6s2	2	7′-9	23	6s2	2	7′-9	23
WING SLOPE, BOTH F. (R)	6s3	2	7′-9	23	6s3	2	7′-9	23	6s3	2	7′-9	23	6s3	2	7′-9	23	6s3	2	7′-9	23
WING SLOPE, F. F.	6s4	2	11′-0	33	6s4	2	11′-0	33	6s4	2	11′-0	33	6s4	2	11′-0	33	6s4	2	11′-0	33
WING SLOPE, F. F.	6s5	2	20′-9	62	6s5	2	17′-7	53	6s5	2	14′-5	43	6s5	2	11′-3	34	6s5	2	8′-1	24
CURTAIN, VERT.	5t1	11	6′-11	79	5t1	11	6′-8	76	5t1	11	6′-5	74	5t1	11	6′-5	74	5t1	11	6′-5	74
CURTAIN, VERT., ENDS	5t2	4	6′-11	29	5t2	4	6′-8	28	5t2	4	6′-5	27	5t2	4	6′-5	27	5t2	4	6′-5	27
BRACKET, VERT.	5u1	4	5′-9	24	5u1	4	5′-6	23	5u1	4	5′-4	22	5u1	4	5′-4	22	5u1	4	5′-4	22
ESTIMATED QUANTITIES ONE HEADWALL	3980 LBS.				3250 LBS.				2768 LBS.				2356 LBS.				1851 LBS.			
CONCRETE	PARAPET Δ	1.4	25.9 CU.YD.		PARAPET Δ	1.3	21.2 CU.YD.		PARAPET Δ	1.3	18.1 CU.YD.		PARAPET Δ	1.3	15.3 CU.YD.		PARAPET Δ	1.3	12.5 CU.YD.	
	WINGWALLS	9.0			WINGWALLS	6.4			WINGWALLS	5.0			WINGWALLS	3.7			WINGWALLS	2.5		
	APRON	15.5			APRON	13.5			APRON	11.8			APRON	10.3			APRON	8.7		

Δ INCLUDES TOP OF WINGWALL QUANTITIES.

NOTE: WEIGHT OF BARS OVER 40′-0 LONG INCLUDE AN ALLOWANCE OF 2′-0 FOR LAP.

(L) - INDICATES BAR LOCATED AT LEFT CORNER.
(R) - INDICATES BAR LOCATED AT RIGHT CORNER.
REFER TO SHEET PWH 0-1-12 FOR LEFT AND RIGHT CORNER LOCATIONS.

BENT BAR DETAILS

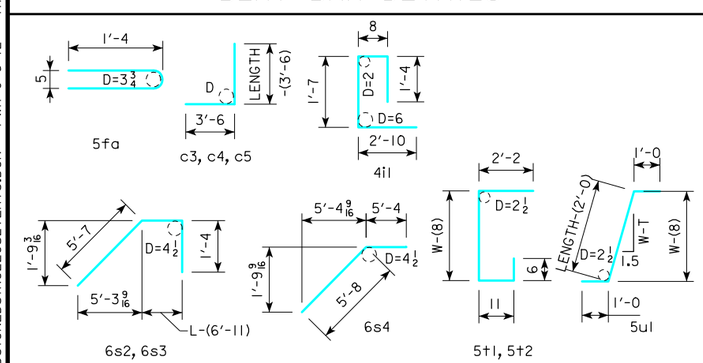

NOTE: ALL DIMENSIONS ARE OUT TO OUT
D = PIN DIAMETER
SEE TABLE AT RIGHT FOR PIN DIAMETER "D" OF c BARS

c BAR PIN DIAMETER	
BAR SIZE	D
4	3
5	3¾
6	4½

HEADWALL NOTES:

THIS HEADWALL IS BASED ON A 3:1 SLOPE NORMAL TO CENTERLINE OF ROADWAY.

THE SIDES OF THE FOOTING ARE TO BE FORMED TO INSURE CORRECT LINE AND GRADE.

ALL EXPOSED CORNERS OF 90° OR SHARPER ARE TO BE FILLETED WITH A ¾" DRESSED AND BEVELED STRIP.

ALL REINFORCING IS TO BE SECURELY WIRED IN PLACE BEFORE THE CONCRETE IS POURED. ALL SLAB AND FLOOR REINFORCING STEEL IS TO BE SUPPORTED BY BAR CHAIRS AT INTERVALS OF NOT MORE THAN 3′-0 IN EITHER DIRECTION AS OUTLINED IN THE STANDARD SPECIFICATIONS.

CLEAR DISTANCE FROM FACE OF CONCRETE TO NEAR REINFORCING BAR IS TO BE 2" UNLESS OTHERWISE NOTED OR SHOWN. CLEARANCE TO THE BOTTOM ENDS OF VERTICAL BARS SHALL BE 3 INCHES.

CONCRETE QUANTITIES ARE ESTIMATED FROM BACK OF PARAPET.

HORIZONTAL TAILS OF BARS "b" & "s" ESTIMATED TO EXTEND 2′-0 BEYOND BACK OF PARAPET (INTO END OF BARREL). LONGITUDINAL BARS "4d1" AND "6f1" ESTIMATED TO PROJECT INTO END SECTION OF BARREL A MINIMUM OF 2′-0 BEYOND BACK OF PARAPET. THE "LENGTH" COLUMN REFLECTS TOTAL NUMBER OF FEET NECESSARY TO MEET THESE REQUIREMENTS.

07-2016
LATEST REVISION DATE

APPROVED BY BRIDGE ENGINEER

IOWA DOT Highway Division

STANDARD DESIGN - SINGLE REINFORCED CONCRETE BOX CULVERTS

PARALLEL WING HEADWALLS

APRIL, 2012

QUANTITY TABULATION
10′-0 SPAN
0° SKEW

PWH 0-6-12

REVISED 07-2016 - CHANGED FENCE ANCHOR BAR (5fa) FROM 3′-1 TO 2′-10.
ENGLISHLRFDSIGNEDSINGLECULVERTS.DGN - PWH 0-6-12 - THIS SHEET ISSUED 04-12.

BILL OF REINFORCING FOR ONE HEADWALL 0° SKEW CULVERT SPAN x CULVERT HEIGHT

LOCATION	SHAPE	8′ x 10′				8′ x 9″				8′ x 8′				8′ x 7′			
		BAR	NO.	LENGTH	WT.	BAR	NO.	LENGTH	WT.	BAR	NO.	LENGTH	WT.	BAR	NO.	LENGTH	WT.
FENCE ANCHOR (GALV.)		5fa	2	2′-10	6	5fa	2	2′-10	6	5fa	2	2′-10	6	5fa	2	2′-10	6
WINGWALL, F.F.H.		5b1	2	33′-10	71	5b1	2	30′-10	64	5b1	2	27′-10	58	5b1	2	24′-10	52
WINGWALL, F.F.H.		5b2	18 VAR	2 EACH 8′-10:32′-10	391	5b2	16 VAR	2 EACH 8′-10:29′-10	323	5b2	14 VAR	2 EACH 8′-10:26′-10	260	5b2	12 VAR	2 EACH 8′-10:23′-10	204
WINGWALL, B.F.H.		4b3	2	33′-10	45	4b3	2	30′-10	41	4b3	2	27′-10	37	4b3	2	24′-10	33
WINGWALL, B.F.H.		4b4	16 VAR	2 EACH 11′-10:32′-10	239	4b4	14 VAR	2 EACH 11′-10:29′-10	195	4b4	12 VAR	2 EACH 11′-10:26′-10	155	4b4	10 VAR	2 EACH 11′-10:23′-10	119
WINGWALL, F.F.V.		5c1	124 VAR	2 EACH 2′-6:12′-8	981	5c1	74 VAR	2 EACH 2′-6:11′-6	540	5c1	50 VAR	2 EACH 2′-6:10′-6	339	5c1	44 VAR	2 EACH 2′-6:9′-6	275
WINGWALL, F.F.V. (L)		5c2	2	12′-9	27	5c2	2	11′-9	25	5c2	2	10′-9	22	5c2	2	9′-9	20
WINGWALL, F.F.V. (R)		5c2	2	12′-9	27	5c2	2	11′-9	25	5c2	2	10′-9	22	5c2	2	9′-9	20
WINGWALL, B.F.V.		6c3	62 VAR	2 EACH 6′-1:16′-1	1032	5c3	56 VAR	2 EACH 6′-1:15′-1	618	5c3	50 VAR	2 EACH 6′-1:14′-1	526	5c3	44 VAR	2 EACH 6′-1:13′-1	440
WINGWALL, B.F.V. (L)		6c4	2	16′-3	49	5c4	2	15′-3	32	5c4	2	14′-3	30	5c4	2	13′-3	28
WINGWALL, B.F.V. (R)		6c4	2	16′-3	49	5c4	2	15′-3	32	5c4	2	14′-3	30	5c4	2	13′-3	28
WINGWALL, B.F.V.		6c5	42	8′-6	536	5c5	38	8′-6	337	5c5	34	8′-6	301	5c5	30	8′-6	266
APRON, LONGIT., BOTT.		4d1	7	33′-10	158	4d1	7	30′-10	144	4d1	7	27′-10	130	4d1	7	24′-10	116
APRON, LONGIT., TOP		6f1	9	33′-10	457	6f1	9	30′-10	417	6f1	9	27′-10	376	6f1	9	24′-10	336
PARAPET, VERTICAL		4i1	17	6′-5	73	4i1	17	6′-5	73	4i1	17	6′-5	73	4i1	17	6′-5	73
PARAPET, HORIZ.		7j1	4	9′-4	76	7j1	4	9′-4	76	7j1	4	9′-4	76	7j1	4	9′-2	75
APRON, TRANS., TOP		6m1	32	9′-10	473	6m1	29	9′-10	428	6m1	26	9′-10	384	6m1	23	9′-8	334
APRON, TRANS., TOP		m2	–	–	–	m2	–	–	–	m2	–	–	–	m2	–	–	–
APRON, TRANS., BOTT.		5m3	61	6′-7	419	6m3	28	7′-5	312	5m3	25	6′-7	172	4m3	22	5′-7	82
CURTAIN, HORIZ.		6p1	6	9′-10	89	6p1	6	9′-10	89	6p1	6	9′-10	89	6p1	5	9′-8	73
WING SLOPE, BOTH F.		6s1	4	29′-4	176	6s1	4	26′-2	157	6s1	4	23′-0	138	6s1	4	19′-10	119
WING SLOPE, BOTH F. (L)		6s2	2	7′-9	23	6s2	2	7′-9	23	6s2	2	7′-9	23	6s2	2	7′-9	23
WING SLOPE, BOTH F. (R)		6s3	2	7′-9	23	6s3	2	7′-9	23	6s3	2	7′-9	23	6s3	2	7′-9	23
WING SLOPE, F. F.		6s4	2	11′-0	33	6s4	2	11′-0	33	6s4	2	11′-0	33	6s4	2	11′-0	33
WING SLOPE, F. F.		6s5	2	27′-1	81	6s5	2	23′-11	72	6s5	2	20′-9	62	6s5	2	17′-7	53
CURTAIN, VERT.		5t1	9	7′-5	70	5t1	9	7′-2	67	5t1	9	6′-11	65	5t1	9	6′-8	63
CURTAIN, VERT., ENDS		5t2	4	7′-5	31	5t2	4	7′-2	30	5t2	4	6′-11	29	5t2	4	6′-8	28
BRACKET, VERT.		5u1	4	6′-2	26	5u1	4	5′-11	25	5u1	4	5′-8	24	5u1	4	5′-6	23

LOCATION	8′ x 6′				8′ x 5′				8′ x 4′			
	BAR	NO.	LENGTH	WT.	BAR	NO.	LENGTH	WT.	BAR	NO.	LENGTH	WT.
FENCE ANCHOR (GALV.)	5fa	2	2′-10	6	5fa	2	2′-10	6	5fa	2	2′-10	6
WINGWALL, F.F.H.	5b1	2	21′-10	46	5b1	2	18′-10	39	5b1	2	15′-10	33
WINGWALL, F.F.H.	5b2	10 VAR	2 EACH 8′-10:20′-10	155	5b2	8 VAR	2 EACH 8′-10:17′-10	111	5b2	6 VAR	2 EACH 8′-10:14′-10	74
WINGWALL, B.F.H.	4b3	2	21′-10	29	4b3	2	18′-10	25	4b3	2	15′-10	21
WINGWALL, B.F.H.	4b4	8 VAR	2 EACH 11′-10:20′-10	87	4b4	6 VAR	2 EACH 11′-10:17′-10	59	4b4	4 VAR	2 EACH 11′-10:14′-10	36
WINGWALL, F.F.V.	4c1	38 VAR	2 EACH 2′-6:8′-6	140	4c1	32 VAR	2 EACH 2′-6:7′-6	107	4c1	26 VAR	2 EACH 2′-6:6′-6	78
WINGWALL, F.F.V. (L)	4c2	2	8′-9	12	4c2	2	7′-9	10	4c2	2	6′-9	9
WINGWALL, F.F.V. (R)	4c2	2	8′-9	12	4c2	2	7′-9	10	4c2	2	6′-9	9
WINGWALL, B.F.V.	6c3	38 VAR	2 EACH 6′-1:12′-1	518	5c3	32 VAR	2 EACH 6′-1:11′-1	286	5c3	26 VAR	2 EACH 6′-1:10′-1	219
WINGWALL, B.F.V. (L)	6c4	2	12′-3	37	5c4	2	11′-3	23	5c4	2	10′-3	21
WINGWALL, B.F.V. (R)	6c4	2	12′-3	37	5c4	2	11′-3	23	5c4	2	10′-3	21
WINGWALL, B.F.V.	c5	–	–	–	c5	–	–	–	c5	–	–	–
APRON, LONGIT., BOTT.	4d1	7	21′-10	102	4d1	7	18′-10	88	4d1	7	15′-10	74
APRON, LONGIT., TOP	6f1	9	21′-10	295	6f1	9	18′-10	255	6f1	9	15′-10	214
PARAPET, VERTICAL	4i1	17	6′-5	73	4i1	17	6′-5	73	4i1	17	6′-5	73
PARAPET, HORIZ.	7j1	4	9′-2	75	7j1	4	9′-2	75	7j1	4	9′-2	75
APRON, TRANS., TOP	6m1	20	9′-8	290	6m1	17	9′-8	247	6m1	14	9′-8	203
APRON, TRANS., TOP	m2	–	–	–	m2	–	–	–	m2	–	–	–
APRON, TRANS., BOTT.	4m3	19	5′-7	71	4m3	16	5′-7	60	4m3	13	5′-7	48
CURTAIN, HORIZ.	6p1	5	9′-8	73	6p1	5	9′-8	73	6p1	5	9′-8	73
WING SLOPE, BOTH F.	6s1	4	16′-8	100	6s1	4	13′-7	82	6s1	4	10′-5	63
WING SLOPE, BOTH F. (L)	6s2	2	7′-9	23	6s2	2	7′-9	23	6s2	2	7′-9	23
WING SLOPE, BOTH F. (R)	6s3	2	7′-9	23	6s3	2	7′-9	23	6s3	2	7′-9	23
WING SLOPE, F. F.	6s4	2	11′-0	33	6s4	2	11′-0	33	6s4	2	11′-0	33
WING SLOPE, F. F.	6s5	2	14′-5	43	6s5	2	11′-3	34	6s5	2	8′-1	24
CURTAIN, VERT.	5t1	9	6′-5	60	5t1	9	6′-5	60	5t1	9	6′-5	60
CURTAIN, VERT., ENDS	5t2	4	6′-5	27	5t2	4	6′-5	27	5t2	4	6′-5	27
BRACKET, VERT.	5u1	4	5′-3	22	5u1	4	5′-3	22	5u1	4	5′-3	22

ESTIMATED QUANTITIES ONE HEADWALL		8′ x 10′			8′ x 9″			8′ x 8′			8′ x 7′			8′ x 6′			8′ x 5′			8′ x 4′		
REINF. STEEL		5661 LBS.			4207 LBS.			3483 LBS.			2945 LBS.			2389 LBS.			1874 LBS.			1562 LBS.		
CONCRETE	PARAPET Δ	1.2	28.6 CU.YD.	PARAPET Δ	1.2	25.1 CU.YD.	PARAPET Δ	1.2	21.8 CU.YD.	PARAPET Δ	1.2	17.7 CU.YD.	PARAPET Δ	1.2	15.1 CU.YD.	PARAPET Δ	1.2	12.6 CU.YD.	PARAPET Δ	1.2	10.3 CU.YD.
	WINGWALLS	13.2		WINGWALLS	11.0		WINGWALLS	9.0		WINGWALLS	6.4		WINGWALLS	5.0		WINGWALLS	3.7		WINGWALLS	2.5	
	APRON	14.2		APRON	12.9		APRON	11.6		APRON	10.1		APRON	8.9		APRON	7.7		APRON	6.6	

Δ INCLUDES TOP OF WINGWALL QUANTITIES.

NOTE: WEIGHT OF BARS OVER 40′-0 LONG INCLUDE AN ALLOWANCE OF 2′-0 FOR LAP.

(L) - INDICATES BAR LOCATED AT LEFT CORNER.
(R) - INDICATES BAR LOCATED AT RIGHT CORNER.
REFER TO SHEET PWH 0-1-12 FOR LEFT AND RIGHT CORNER LOCATIONS.

BENT BAR DETAILS

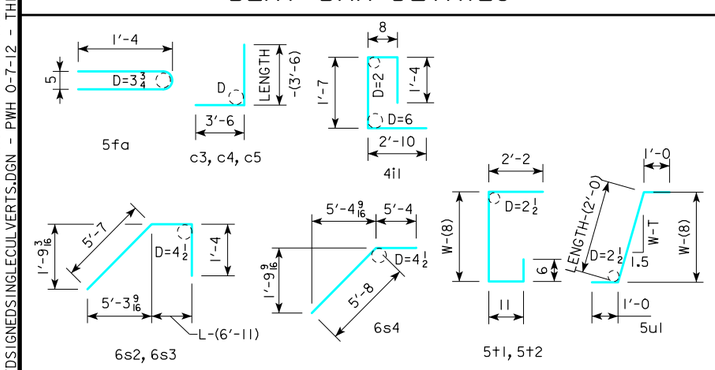

NOTE: ALL DIMENSIONS ARE OUT TO OUT
D = PIN DIAMETER
SEE TABLE AT RIGHT FOR PIN DIAMETER "D" OF c BARS

c BAR PIN DIAMETER	
BAR SIZE	D
4	3
5	3¾
6	4½

HEADWALL NOTES:

THIS HEADWALL IS BASED ON A 3:1 SLOPE NORMAL TO CENTERLINE OF ROADWAY.

THE SIDES OF THE FOOTING ARE TO BE FORMED TO INSURE CORRECT LINE AND GRADE.

ALL EXPOSED CORNERS OF 90° OR SHARPER ARE TO BE FILLETED WITH A ¾" DRESSED AND BEVELED STRIP.

ALL REINFORCING IS TO BE SECURELY WIRED IN PLACE BEFORE THE CONCRETE IS POURED. ALL SLAB AND FLOOR REINFORCING STEEL IS TO BE SUPPORTED BY BAR CHAIRS AT INTERVALS OF NOT MORE THAN 3′-0 IN EITHER DIRECTION AS OUTLINED IN THE STANDARD SPECIFICATIONS.

CLEAR DISTANCE FROM FACE OF CONCRETE TO NEAR REINFORCING BAR IS TO BE 2" UNLESS OTHERWISE NOTED OR SHOWN. CLEARANCE TO THE BOTTOM ENDS OF VERTICAL BARS SHALL BE 3 INCHES.

CONCRETE QUANTITIES ARE ESTIMATED FROM BACK OF PARAPET.

HORIZONTAL TAILS OF BARS "b" & "s" ESTIMATED TO EXTEND 2′-0 BEYOND BACK OF PARAPET (INTO END OF BARREL). LONGITUDINAL BARS "4d1" AND "6f1" ESTIMATED TO PROJECT INTO END SECTION OF BARREL A MINIMUM OF 2′-0 BEYOND BACK OF PARAPET. THE "LENGTH" COLUMN REFLECTS TOTAL NUMBER OF FEET NECESSARY TO MEET THESE REQUIREMENTS.

07-2016
LATEST REVISION DATE

APPROVED BY BRIDGE ENGINEER

IOWA DOT Highway Division

STANDARD DESIGN - SINGLE REINFORCED CONCRETE BOX CULVERTS

PARALLEL WING HEADWALLS

APRIL, 2012

QUANTITY TABULATION
8′-0 SPAN
0° SKEW

PWH 0-7-12

REVISED 07-2016 - CHANGED FENCE ANCHOR BAR (5fa) FROM 3′-1 TO 2′-10.
ENGLISHLRFDSIGNEDSINGLECULVERTS.DGN - PWH 0-7-12 - THIS SHEET ISSUED 04-12.

BILL OF REINFORCING FOR ONE HEADWALL 0° SKEW CULVERT SPAN x CULVERT HEIGHT

LOCATION	SHAPE	6′ x 8′				6′ x 7′				6′ x 6′				6′ x 5′				6′ x 4′				6′ x 3′			
		BAR	NO.	LENGTH	WT.	BAR	NO.	LENGTH	WT.	BAR	NO.	LENGTH	WT.	BAR	NO.	LENGTH	WT.	BAR	NO.	LENGTH	WT.	BAR	NO.	LENGTH	WT.
FENCE ANCHOR (GALV.)		5fa	2	2′-10	6	5fa	2	2′-10	6	5fa	2	2′-10	6	5fa	2	2′-10	6	5fa	2	2′-10	6	5fa	2	2′-10	6
WINGWALL, F.F.H.		5b1	2	27′-10	58	5b1	2	24′-10	52	5b1	2	21′-10	46	5b1	2	18′-10	39	5b1	2	15′-10	33	5b1	2	12′-10	27
WINGWALL, F.F.H.		5b2	14 VAR	2 EACH 8′-10:26′-10	260	5b2	12 VAR	2 EACH 8′-10:23′-10	204	5b2	10 VAR	2 EACH 8′-10:20′-10	155	5b2	8 VAR	2 EACH 8′-10:17′-10	111	5b2	6 VAR	2 EACH 8′-10:14′-10	74	5b2	4 VAR	2 EACH 8′-10:11′-10	43
WINGWALL, B.F.H.		4b3	2	27′-10	37	4b3	2	24′-10	33	4b3	2	21′-10	29	4b3	2	18′-10	25	4b3	2	15′-10	21	4b3	2	12′-10	17
WINGWALL, B.F.H.		4b4	12 VAR	2 EACH 11′-10:26′-10	155	4b4	10 VAR	2 EACH 11′-10:23′-10	119	4b4	8 VAR	2 EACH 11′-10:20′-10	87	4b4	6 VAR	2 EACH 11′-10:17′-10	59	4b4	4 VAR	2 EACH 11′-10:14′-10	36	4b4	2	11′-10	16
WINGWALL, F.F.V.		5c1	50 VAR	2 EACH 2′-6:10′-6	339	5c1	44 VAR	2 EACH 2′-6:9′-6	275	4c1	38 VAR	2 EACH 2′-6:8′-6	140	4c1	32 VAR	2 EACH 2′-6:7′-6	107	4c1	26 VAR	2 EACH 2′-6:6′-6	78	4c1	20 VAR	2 EACH 2′-6:5′-6	53
WINGWALL, F.F.V. (L)		5c2	2	10′-9	22	5c2	2	9′-9	20	4c2	2	8′-9	12	4c2	2	7′-9	10	4c2	2	6′-9	9	4c2	2	5′-9	8
WINGWALL, F.F.V. (R)		5c2	2	10′-9	22	5c2	2	9′-9	20	4c2	2	8′-9	12	4c2	2	7′-9	10	4c2	2	6′-9	9	4c2	2	5′-9	8
WINGWALL, B.F.V.		5c3	50 VAR	2 EACH 6′-1:14′-1	526	5c3	44 VAR	2 EACH 6′-1:13′-1	440	6c3	38 VAR	2 EACH 6′-1:12′-1	518	5c3	32 VAR	2 EACH 6′-1:11′-1	286	4c3	26 VAR	2 EACH 6′-1:10′-1	140	4c3	20 VAR	2 EACH 6′-1:9′-1	101
WINGWALL, B.F.V. (L)		5c4	2	14′-3	30	5c4	2	13′-3	28	6c4	2	12′-3	37	5c4	2	11′-3	23	4c4	2	10′-3	14	4c4	2	9′-3	12
WINGWALL, B.F.V. (R)		5c4	2	14′-3	30	5c4	2	13′-3	28	6c4	2	12′-3	37	5c4	2	11′-3	23	4c4	2	10′-3	14	4c4	2	9′-3	12
WINGWALL, B.F.V.		5c5	34	8′-6	301	5c5	30	8′-6	266	c5	–	–	–	c5	–	–	–	c5	–	–	–	c5	–	–	–
APRON, LONGIT., BOTT.		4d1	6	27′-10	112	4d1	6	24′-10	100	4d1	6	21′-10	88	4d1	6	18′-10	75	4d1	6	15′-10	63	4d1	6	12′-10	51
APRON, LONGIT., TOP		6f1	7	27′-10	293	6f1	7	24′-10	261	6f1	7	21′-10	230	6f1	7	18′-10	198	6f1	7	15′-10	166	6f1	7	12′-10	135
PARAPET, VERTICAL		4i1	13	6′-5	56	4i1	13	6′-5	56	4i1	13	6′-5	56	4i1	13	6′-5	56	4i1	13	6′-5	56	4i1	13	6′-5	56
PARAPET, HORIZ.		7j1	4	7′-4	60	7j1	4	7′-2	59	7j1	4	7′-2	59	7j1	4	7′-2	59	7j1	4	7′-2	59	7j1	4	7′-2	59
APRON, TRANS., TOP		6m1	26	7′-10	306	6m1	23	7′-8	265	6m1	20	7′-8	230	6m1	17	7′-8	196	6m1	14	7′-8	161	6m1	11	7′-8	127
APRON, TRANS., TOP		m2	–	–	–	m2	–	–	–	m2	–	–	–	m2	–	–	–	m2	–	–	–	m2	–	–	–
APRON, TRANS., BOTT.		5m3	25	4′-7	120	5m3	22	4′-5	101	4m3	19	3′-7	45	4m3	16	3′-7	38	4m3	13	3′-7	31	4m3	10	3′-7	24
CURTAIN, HORIZ.		6p1	6	7′-10	71	6p1	5	7′-8	58	6p1	5	7′-8	58	6p1	5	7′-8	58	6p1	5	7′-8	58	6p1	5	7′-8	58
WING SLOPE, BOTH F.		6s1	4	23′-0	138	6s1	4	19′-10	119	6s1	4	16′-8	100	6s1	4	13′-7	82	6s1	4	10′-5	63	6s1	4	7′-3	44
WING SLOPE, BOTH F. (L)		6s2	2	7′-9	23	6s2	2	7′-9	23	6s2	2	7′-9	23	6s2	2	7′-9	23	6s2	2	7′-9	23	6s2	2	7′-9	23
WING SLOPE, BOTH F. (R)		6s3	2	7′-9	23	6s3	2	7′-9	23	6s3	2	7′-9	23	6s3	2	7′-9	23	6s3	2	7′-9	23	6s3	2	7′-9	23
WING SLOPE, F. F.		6s4	2	11′-0	33	6s4	2	11′-0	33	6s4	2	11′-0	33	6s4	2	11′-0	33	6s4	2	11′-0	33	6s4	2	11′-0	33
WING SLOPE, F. F.		6s5	2	20′-9	62	6s5	2	17′-7	53	6s5	2	14′-5	43	6s5	2	11′-3	34	6s5	2	8′-1	24	6s5	2	4′-11	15
CURTAIN, VERT.		5t1	7	6′-11	50	5t1	7	6′-8	49	5t1	7	6′-5	47	5t1	7	6′-5	47	5t1	7	6′-5	47	5t1	7	6′-5	47
CURTAIN, VERT., ENDS		5t2	4	6′-11	29	5t2	4	6′-8	28	5t2	4	6′-5	27	5t2	4	6′-5	27	5t2	4	6′-5	27	5t2	4	6′-5	27
BRACKET, VERT.		5u1	4	5′-8	24	5u1	4	5′-6	23	5u1	4	5′-3	22	5u1	4	5′-3	22	5u1	4	5′-3	22	5u1	4	5′-3	22

ESTIMATED QUANTITIES ONE HEADWALL		6′ x 8′			6′ x 7′			6′ x 6′			6′ x 5′			6′ x 4′			6′ x 3′		
REINF. STEEL		3186 LBS.			2742 LBS.			2163 LBS.			1670 LBS.			1290 LBS.			1047 LBS.		
CONCRETE	PARAPET Δ	1.1	19.7 CU.YD.	PARAPET Δ	1.0	15.7 CU.YD.	PARAPET Δ	1.0	13.3 CU.YD.	PARAPET Δ	1.0	11.0 CU.YD.	PARAPET Δ	1.0	8.9 CU.YD.	PARAPET Δ	1.0	7.1 CU.YD.
	WINGWALLS	9.0		WINGWALLS	6.4		WINGWALLS	5.0		WINGWALLS	3.7		WINGWALLS	2.5		WINGWALLS	1.6	
	APRON	9.6		APRON	8.3		APRON	7.3		APRON	6.3		APRON	5.4		APRON	4.5	

Δ INCLUDES TOP OF WINGWALL QUANTITIES.

NOTE: WEIGHT OF BARS OVER 40′-0 LONG INCLUDE AN ALLOWANCE OF 2′-0 FOR LAP.

(L) - INDICATES BAR LOCATED AT LEFT CORNER.
(R) - INDICATES BAR LOCATED AT RIGHT CORNER.
REFER TO SHEET PWH 0-1-12 FOR LEFT AND RIGHT CORNER LOCATIONS.

BENT BAR DETAILS

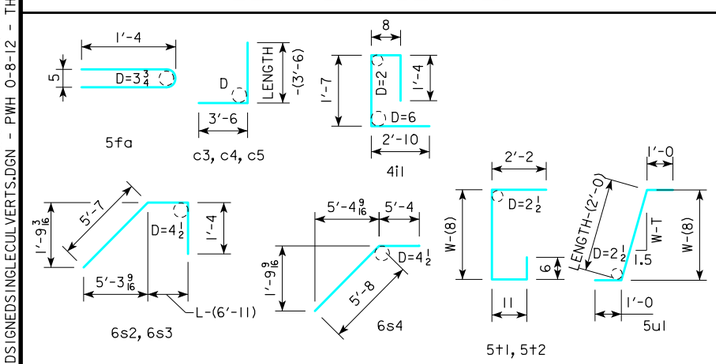

NOTE: ALL DIMENSIONS ARE OUT TO OUT
D = PIN DIAMETER
SEE TABLE AT RIGHT FOR PIN DIAMETER "D" OF c BARS

c BAR PIN DIAMETER	
BAR SIZE	D
4	3
5	3¾
6	4½

HEADWALL NOTES:

THIS HEADWALL IS BASED ON A 3:1 SLOPE NORMAL TO CENTERLINE OF ROADWAY.

THE SIDES OF THE FOOTING ARE TO BE FORMED TO INSURE CORRECT LINE AND GRADE.

ALL EXPOSED CORNERS OF 90° OR SHARPER ARE TO BE FILLETED WITH A ¾" DRESSED AND BEVELED STRIP.

ALL REINFORCING IS TO BE SECURELY WIRED IN PLACE BEFORE THE CONCRETE IS POURED. ALL SLAB AND FLOOR REINFORCING STEEL IS TO BE SUPPORTED BY BAR CHAIRS AT INTERVALS OF NOT MORE THAN 3′-0 IN EITHER DIRECTION AS OUTLINED IN THE STANDARD SPECIFICATIONS.

CLEAR DISTANCE FROM FACE OF CONCRETE TO NEAR REINFORCING BAR IS TO BE 2" UNLESS OTHERWISE NOTED OR SHOWN. CLEARANCE TO THE BOTTOM ENDS OF VERTICAL BARS SHALL BE 3 INCHES.

CONCRETE QUANTITIES ARE ESTIMATED FROM BACK OF PARAPET.

HORIZONTAL TAILS OF BARS "b" & "s" ESTIMATED TO EXTEND 2′-0 BEYOND BACK OF PARAPET (INTO END OF BARREL). LONGITUDINAL BARS "4d1" AND "6f1" ESTIMATED TO PROJECT INTO END SECTION OF BARREL A MINIMUM OF 2′-0 BEYOND BACK OF PARAPET. THE "LENGTH" COLUMN REFLECTS TOTAL NUMBER OF FEET NECESSARY TO MEET THESE REQUIREMENTS.

07-2016
LATEST REVISION DATE

APPROVED BY BRIDGE ENGINEER

IOWA DOT Highway Division

STANDARD DESIGN - SINGLE REINFORCED CONCRETE BOX CULVERTS

PARALLEL WING HEADWALLS

APRIL, 2012

QUANTITY TABULATION
6′-0 SPAN
0° SKEW

PWH 0-8-12

REVISED 07-2016 - CHANGED FENCE ANCHOR BAR (5fa) FROM 3′-1 TO 2′-10.
ENGLISHLRFDSIGNEDSINGLECULVERTS.DGN - PWH 0-8-12 - THIS SHEET ISSUED 04-12.

BILL OF REINFORCING FOR ONE HEADWALL 0° SKEW CULVERT SPAN x CULVERT HEIGHT

LOCATION	SHAPE	5′ x 6′				5′ x 5′				5′ x 4′				5′ x 3′				4′ x 4′				3′ x 3′			
		BAR	NO.	LENGTH	WT.	BAR	NO.	LENGTH	WT.	BAR	NO.	LENGTH	WT.	BAR	NO.	LENGTH	WT.	BAR	NO.	LENGTH	WT.	BAR	NO.	LENGTH	WT.
FENCE ANCHOR (GALV.)		5fa	2	2′-10	6	5fa	2	2′-10	6	5fa	2	2′-10	6		2	2′-10	6	5fa	2	2′-10	6	5fa	2	2′-10	6
WINGWALL, F.F.H.		5b1	2	21′-10	46	5b1	2	18′-10	39	5b1	2	15′-10	33	5b1	2	12′-10	27	5b1	2	15′-10	33	5b1	2	12′-10	27
WINGWALL, F.F.H.		5b2	10 VAR	2 EACH 8′-10:20′-10	155	5b2	8 VAR	2 EACH 8′-10:17′-10	111	5b2	6 VAR	2 EACH 8′-10:14′-10	74	5b2	4 VAR	2 EACH 8′-10:11′-10	43	5b2	6 VAR	2 EACH 8′-10:14′-10	74	5b2	4 VAR	2 EACH 8′-10:11′-10	43
WINGWALL, B.F.H.		4b3	2	21′-10	29	4b3	2	18′-10	25	4b3	2	15′-10	21	4b3	2	12′-10	17	4b3	2	15′-10	21	4b3	2	12′-10	17
WINGWALL, B.F.H.		4b4	8 VAR	2 EACH 11′-10:20′-10	87	4b4	6 VAR	2 EACH 11′-10:17′-10	59	4b4	4 VAR	2 EACH 11′-10:14′-10	36	4b4	2	11′-10	16	4b4	4 VAR	2 EACH 11′-10:14′-10	36	4b4	2	11′-10	16
WINGWALL, F.F.V.		4c1	38 VAR	2 EACH 2′-6:8′-6	140	4c1	32 VAR	2 EACH 2′-6:7′-6	107	4c1	26 VAR	2 EACH 2′-6:6′-6	78	4c1	20 VAR	2 EACH 2′-6:5′-6	53	4c1	26 VAR	2 EACH 2′-6:6′-6	78	4c1	20 VAR	2 EACH 2′-6:5′-6	53
WINGWALL, F.F.V. (L)		4c2	2	8′-9	12	4c2	2	7′-9	10	4c2	2	6′-9	9	4c2	2	5′-9	8	4c2	2	6′-9	9	4c2	2	5′-9	8
WINGWALL, F.F.V. (R)		4c2	2	8′-9	12	4c2	2	7′-9	10	4c2	2	6′-9	9	4c2	2	5′-9	8	4c2	2	6′-9	9	4c2	2	5′-9	8
WINGWALL, B.F.V.		6c3	38 VAR	2 EACH 6′-1:12′-1	518	5c3	32 VAR	2 EACH 6′-1:11′-1	286	4c3	26 VAR	2 EACH 6′-1:10′-1	140	4c3	20 VAR	2 EACH 6′-1:9′-1	101	4c3	26 VAR	2 EACH 6′-1:10′-1	140	4c3	20 VAR	2 EACH 6′-1:9′-1	101
WINGWALL, B.F.V. (L)		6c4	2	12′-3	37	5c4	2	11′-3	23	4c4	2	10′-3	14	4c4	2	9′-3	12	4c4	2	10′-3	14	4c4	2	9′-3	12
WINGWALL, B.F.V. (R)		6c4	2	12′-3	37	5c4	2	11′-3	23	4c4	2	10′-3	14	4c4	2	9′-3	12	4c4	2	10′-3	14	4c4	2	9′-3	12
WINGWALL, B.F.V.		c5	–	–	–	c5	–	–	–	c5	–	–	–	c5	–	–	–	c5	–	–	–	c5	–	–	–
APRON, LONGIT., BOTT.		4d1	5	21′-10	73	4d1	5	18′-10	63	4d1	5	15′-10	53	4d1	5	12′-10	43	4d1	5	15′-10	53	4d1	4	12′-10	34
APRON, LONGIT., TOP		6f1	6	21′-10	197	6f1	6	18′-10	170	6f1	6	15′-10	143	6f1	6	12′-10	116	6f1	5	15′-10	119	6f1	4	12′-10	77
PARAPET, VERTICAL		4i1	11	6′-5	47	4i1	11	6′-5	47	4i1	11	6′-5	47	4i1	11	6′-5	47	4i1	9	6′-5	39	4i1	7	6′-5	30
PARAPET, HORIZ.		7j1	4	6′-2	50	7j1	4	6′-2	50	7j1	4	6′-2	50	7j1	4	6′-2	50	7j1	4	5′-2	42	7j1	4	4′-2	34
APRON, TRANS., TOP		6m1	20	6′-8	200	6m1	17	6′-8	170	6m1	14	6′-8	140	6m1	11	6′-8	110	6m1	14	5′-8	119	6m1	11	4′-8	77
APRON, TRANS., TOP		m2	–	–	–	m2	–	–	–	m2	–	–	–	m2	–	–	–	m2	–	–	–	m2	–	–	–
APRON, TRANS., BOTT.		4m3	19	2′-7	33	4m3	16	2′-7	28	4m3	13	2′-7	22	4m3	10	2′-7	17	m3	–	–	–	m3	–	–	–
CURTAIN, HORIZ.		6p1	5	6′-8	50	6p1	5	6′-8	50	6p1	5	6′-8	50	6p1	5	6′-8	50	6p1	5	5′-8	43	6p1	5	4′-8	35
WING SLOPE, BOTH F.		6s1	4	16′-8	100	6s1	4	13′-7	82	6s1	4	10′-5	63	6s1	4	7′-3	44	6s1	4	10′-5	63	6s1	4	7′-3	44
WING SLOPE, BOTH F. (L)		6s2	2	7′-9	23	6s2	2	7′-9	23	6s2	2	7′-9	23	6s2	2	7′-9	23	6s2	2	7′-9	23	6s2	2	7′-9	23
WING SLOPE, BOTH F. (R)		6s3	2	7′-9	23	6s3	2	7′-9	23	6s3	2	7′-9	23	6s3	2	7′-9	23	6s3	2	7′-9	23	6s3	2	7′-9	23
WING SLOPE, F. F.		6s4	2	11′-0	33	6s4	2	11′-0	33	6s4	2	11′-0	33	6s4	2	11′-0	33	6s4	2	11′-0	33	6s4	2	11′-0	33
WING SLOPE, F. F.		6s5	2	14′-5	43	6s5	2	11′-3	34	6s5	2	8′-1	24	6s5	2	4′-11	15	6s5	2	8′-1	24	6s5	2	4′-11	15
CURTAIN, VERT.		5t1	6	6′-5	40	5t1	6	6′-5	40	5t1	6	6′-5	40	5t1	6	6′-5	40	5t1	5	6′-5	33	5t1	4	6′-5	27
CURTAIN, VERT., ENDS		5t2	4	6′-5	27	5t2	4	6′-5	27	5t2	4	6′-5	27	5t2	4	6′-5	27	5t2	4	6′-5	27	5t2	4	6′-5	27
BRACKET, VERT.		5u1	4	5′-3	22	5u1	4	5′-3	22	5u1	4	5′-3	22	5u1	4	5′-3	22	5u1	4	5′-3	22	5u1	4	5′-3	22

ESTIMATED QUANTITIES ONE HEADWALL		5′ x 6′	5′ x 5′	5′ x 4′	5′ x 3′	4′ x 4′	3′ x 3′
	REINF. STEEL	2040 LBS.	1561 LBS.	1194 LBS.	963 LBS.	1097 LBS.	804 LBS.
	CONCRETE	PARAPET Δ 0.9 WINGWALLS 5.0 APRON 6.5 12.4 CU.YD.	PARAPET Δ 0.9 WINGWALLS 3.7 APRON 5.6 10.2 CU.YD.	PARAPET Δ 0.9 WINGWALLS 2.5 APRON 4.8 8.2 CU.YD.	PARAPET Δ 0.9 WINGWALLS 1.6 APRON 4.0 6.5 CU.YD.	PARAPET Δ 0.9 WINGWALLS 2.5 APRON 4.2 7.6 CU.YD.	PARAPET Δ 0.8 WINGWALLS 1.6 APRON 3.0 5.4 CU.YD.

Δ INCLUDES TOP OF WINGWALL QUANTITIES.

NOTE: WEIGHT OF BARS OVER 40′-0 LONG INCLUDE AN ALLOWANCE OF 2′-0 FOR LAP.

(L) - INDICATES BAR LOCATED AT LEFT CORNER.
(R) - INDICATES BAR LOCATED AT RIGHT CORNER.
REFER TO SHEET PWH 0-1-12 FOR LEFT AND RIGHT CORNER LOCATIONS.

c BAR PIN DIAMETER	
BAR SIZE	D
4	3
5	$3\frac{3}{4}$
6	$4\frac{1}{2}$

HEADWALL NOTES:

THIS HEADWALL IS BASED ON A 3:1 SLOPE NORMAL TO CENTERLINE OF ROADWAY.

THE SIDES OF THE FOOTING ARE TO BE FORMED TO INSURE CORRECT LINE AND GRADE.

ALL EXPOSED CORNERS OF 90° OR SHARPER ARE TO BE FILLETED WITH A $\frac{3}{4}$" DRESSED AND BEVELED STRIP.

ALL REINFORCING IS TO BE SECURELY WIRED IN PLACE BEFORE THE CONCRETE IS POURED. ALL SLAB AND FLOOR REINFORCING STEEL IS TO BE SUPPORTED BY BAR CHAIRS AT INTERVALS OF NOT MORE THAN 3′-0 IN EITHER DIRECTION AS OUTLINED IN THE STANDARD SPECIFICATIONS.

CLEAR DISTANCE FROM FACE OF CONCRETE TO NEAR REINFORCING BAR IS TO BE 2" UNLESS OTHERWISE NOTED OR SHOWN. CLEARANCE TO THE BOTTOM ENDS OF VERTICAL BARS SHALL BE 3 INCHES.

CONCRETE QUANTITIES ARE ESTIMATED FROM BACK OF PARAPET.

HORIZONTAL TAILS OF BARS "b" & "s" ESTIMATED TO EXTEND 2′-0 BEYOND BACK OF PARAPET (INTO END OF BARREL). LONGITUDINAL BARS "4d1" AND "6f1" ESTIMATED TO PROJECT INTO END SECTION OF BARREL A MINIMUM OF 2′-0 BEYOND BACK OF PARAPET. THE "LENGTH" COLUMN REFLECTS TOTAL NUMBER OF FEET NECESSARY TO MEET THESE REQUIREMENTS.

BENT BAR DETAILS

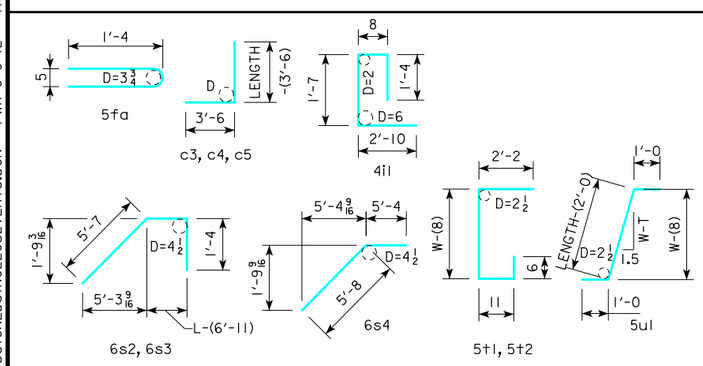

NOTE: ALL DIMENSIONS ARE OUT TO OUT
D = PIN DIAMETER
SEE TABLE AT RIGHT FOR PIN DIAMETER "D" OF c BARS

07-2016
LATEST REVISION DATE

APPROVED BY BRIDGE ENGINEER

IOWA DOT Highway Division

STANDARD DESIGN - SINGLE REINFORCED CONCRETE BOX CULVERTS

PARALLEL WING HEADWALLS

APRIL, 2012

QUANTITY TABULATION
5′-0, 4′-0, & 3′-0 SPANS
0° SKEW

PWH 0-9-12

REVISED 07-2016 - CHANGED FENCE ANCHOR BAR (5fa) FROM 3′-1 TO 2′-10.
ENGLISHLRFDSIGNEDSINGLECULVERTS.DGN - PWH 0-9-12 - THIS SHEET ISSUED 04-12.

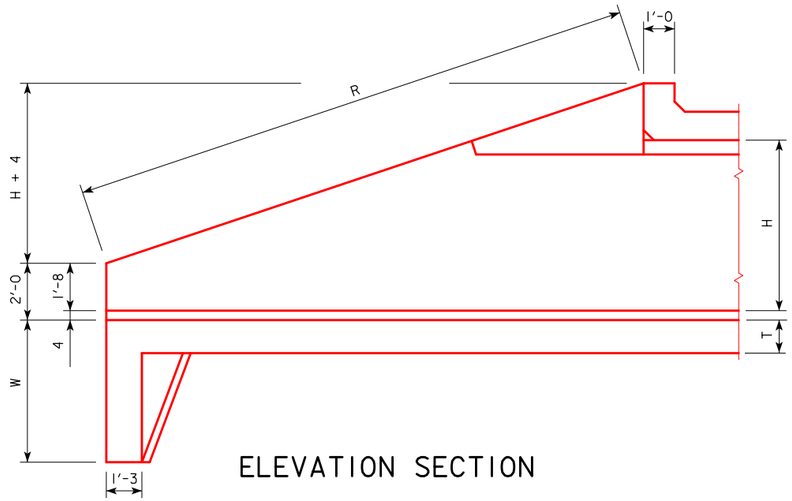

ELEVATION SECTION

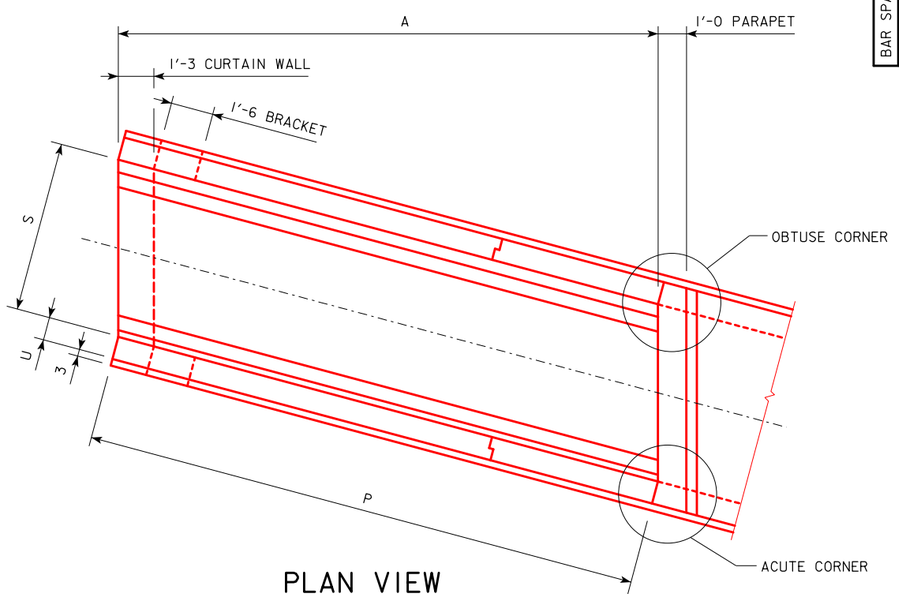

PLAN VIEW

DIMENSION TABLE

	S x H	12' x 12'	12' x 11'	12' x 10'	12' x 9'	12' x 8'	12' x 7'	12' x 6'	12' x 5'	12' x 4'	10' x 12'	10' x 11'	10' x 10'	10' x 9'	10' x 8'	10' x 7'	10' x 6'	10' x 5'	10' x 4'	S x H
HEADWALL DIMENSIONS	A	37'-0	34'-0	31'-0	28'-0	25'-0	22'-0	19'-0	16'-0	13'-0	37'-0	34'-0	31'-0	28'-0	25'-0	22'-0	19'-0	16'-0	13'-0	A
	H	12'-0	11'-0	10'-0	9'-0	8'-0	7'-0	6'-0	5'-0	4'-0	12'-0	11'-0	10'-0	9'-0	8'-0	7'-0	6'-0	5'-0	4'-0	H
	P	38'-3 11/16	35'-2 7/16	32'-1 1/8	28'-11 7/8	25'-10 5/8	22'-9 3/8	19'-8 1/16	16'-6 13/16	13'-5 9/16	38'-3 11/16	35'-2 7/16	32'-1 1/8	28'-11 7/8	25'-10 5/8	22'-9 3/8	19'-8 1/16	16'-6 13/16	13'-5 9/16	P
	R	40'-2 15/16	36'-11 3/4	33'-8 5/8	30'-5 1/2	27'-2 5/16	23'-11 3/16	20'-8	17'-4 7/8	14'-1 11/16	40'-2 15/16	36'-11 3/4	33'-8 5/8	30'-5 1/2	27'-2 5/16	23'-11 3/16	20'-8	17'-4 7/8	14'-1 11/16	R
	S	12'-0	12'-0	12'-0	12'-0	12'-0	12'-0	12'-0	12'-0	12'-0	10'-0	10'-0	10'-0	10'-0	10'-0	10'-0	10'-0	10'-0	10'-0	S
	T	1'-2	1'-2	1'-2	1'-2	1'-2	1'-2	1'-2	1'-2	1'-2	1'-1	1'-1	1'-1	1'-1	1'-1	1'-1	1'-1	1'-1	1'-1	T
	U	1'-0	1'-0	10	10	10	9	9	9	9	1'-0	1'-0	10	10	10	9	9	9	9	U
	W	5'-0	4'-9	4'-6	4'-3	4'-0	3'-9	3'-6	3'-6	3'-6	5'-0	4'-9	4'-6	4'-3	4'-0	3'-9	3'-6	3'-6	3'-6	W
BAR SPACINGS	M	14'-0	13'-0	12'-0	11'-0	9'-0	8'-0	7'-0	6'-0	-	14'-0	13'-0	12'-0	11'-0	9'-0	8'-0	-	-	-	M
	B	1'-0	1'-0	1'-0	1'-0	1'-0	1'-0	1'-0	1'-0	1'-0	1'-0	1'-0	1'-0	1'-0	1'-0	1'-0	1'-0	1'-0	1'-0	B
	C	6	1'-0	1'-0	1'-0	1'-0	1'-0	1'-0	1'-0	1'-0	6	1'-0	9	9	1'-0	1'-0	1'-0	1'-0	1'-0	C
	D	6	1'-0	1'-0	1'-0	1'-0	1'-0	1'-0	1'-0	1'-0	6	1'-0	1'-0	1'-0	1'-0	1'-0	1'-0	1'-0	1'-0	D
	E	9	9	9	9	9	9	9	9	9	9	9	9	9	9	9	9	9	9	E

DIMENSION TABLE

	S x H	8' x 10'	8' x 9'	8' x 8'	8' x 7'	8' x 6'	8' x 5'	8' x 4'	6' x 8'	6' x 7'	6' x 6'	6' x 5'	6' x 4'	6' x 3'	5' x 6'	5' x 5'	5' x 4'	5' x 3'	-	S x H
HEADWALL DIMENSIONS	A	31'-0	28'-0	25'-0	22'-0	19'-0	16'-0	13'-0	25'-0	22'-0	19'-0	16'-0	13'-0	10'-0	19'-0	16'-0	13'-0	10'-0	-	A
	H	10'-0	9'-0	8'-0	7'-0	6'-0	5'-0	4'-0	8'-0	7'-0	6'-0	5'-0	4'-0	3'-0	6'-0	5'-0	4'-0	3'-0	-	H
	P	32'-1 1/8	28'-11 7/8	25'-10 5/8	22'-9 3/8	19'-8 1/16	16'-6 13/16	13'-5 9/16	25'-10 5/8	22'-9 3/8	19'-8 1/16	16'-6 13/16	13'-5 9/16	10'-4 1/4	19'-8 1/16	16'-6 13/16	13'-5 9/16	10'-4 1/4	-	P
	R	33'-8 5/8	30'-5 1/2	27'-2 5/16	23'-11 3/16	20'-8	17'-4 7/8	14'-1 11/16	27'-2 5/16	23'-11 3/16	20'-8	17'-4 7/8	14'-1 11/16	10'-10 9/16	20'-8	17'-4 7/8	14'-1 11/16	10'-10 9/16	-	R
	S	8'-0	8'-0	8'-0	8'-0	8'-0	8'-0	8'-0	6'-0	6'-0	6'-0	6'-0	6'-0	6'-0	5'-0	5'-0	5'-0	5'-0	-	S
	T	11	11	11	11	11	11	11	11	11	11	11	11	11	11	11	11	11	-	T
	U	10	10	10	9	9	9	9	10	9	9	9	9	9	9	9	9	9	-	U
	W	4'-6	4'-3	4'-0	3'-9	3'-6	3'-6	3'-6	4'-0	3'-9	3'-6	3'-6	3'-6	3'-6	3'-6	3'-6	3'-6	3'-6	-	W
BAR SPACINGS	M	12'-0	11'-0	9'-0	8'-0	—	—	—	9'-0	8'-0	—	—	—	—	—	—	—	—	-	M
	B	1'-0	1'-0	1'-0	1'-0	1'-0	1'-0	1'-0	1'-0	1'-0	1'-0	1'-0	1'-0	1'-0	1'-0	1'-0	1'-0	1'-0	-	B
	C	6	9	1'-0	1'-0	1'-0	1'-0	1'-0	9	1'-0	1'-0	1'-0	1'-0	1'-0	1'-0	1'-0	1'-0	1'-0	-	C
	D	6	1'-0	1'-0	1'-0	1'-0	1'-0	1'-0	1'-0	1'-0	1'-0	1'-0	1'-0	1'-0	1'-0	1'-0	1'-0	1'-0	-	D
	E	1'-0	1'-0	1'-0	1'-0	1'-0	1'-0	1'-0	1'-0	1'-0	1'-0	1'-0	1'-0	1'-0	1'-0	1'-0	1'-0	1'-0	-	E

NOTES:

1. SEE DRAWING RCB-G1-12 AND RCB-G2-12 FOR GENERAL NOTES, SPECIFICATIONS, AND DESIGN STRESSES.
2. SEE DRAWING PWH 15-2-12 THRU 15-4-12 FOR LOCATION OF CERTAIN DIMENSIONS TABULATED.
3. SEE DRAWING PWH 15-5-12 THRU PWH 15-9-12 FOR HEADWALL NOTES.

LATEST REVISION DATE

APPROVED BY BRIDGE ENGINEER

IOWA DOT Highway Division

STANDARD DESIGN - SINGLE REINFORCED CONCRETE BOX CULVERTS

PARALLEL WING HEADWALLS

APRIL, 2012

DIMENSION TABLE 15° SKEW

PWH 15-1-12

ENGLISHLRFDSIGNEDSINGLECULVERTS.DGN - PWH 15-1-12 - THIS SHEET ISSUED 04-12.

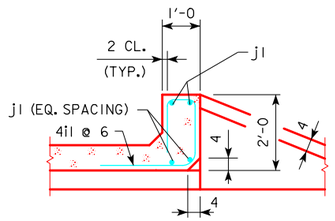

SECTION THRU PARAPET

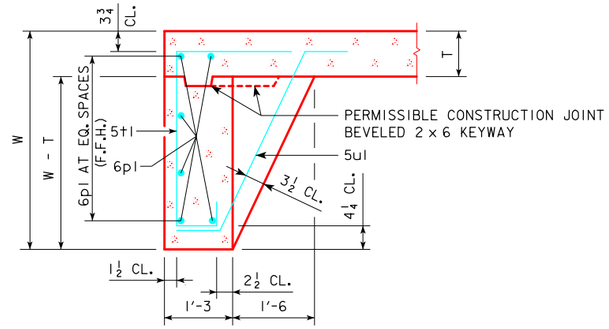

SECTION THRU CURTAIN WALL

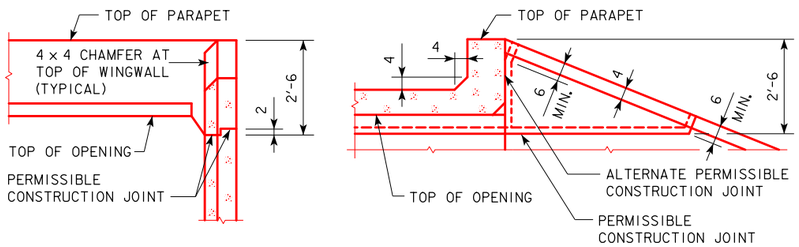

TOP OF WINGWALL DETAILS

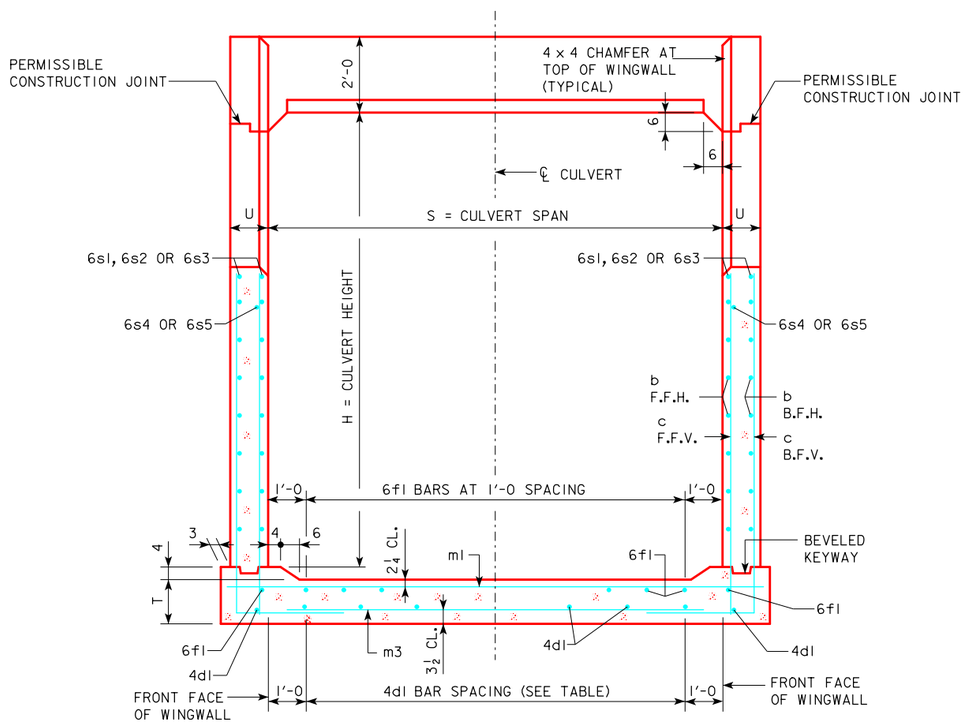

TYPICAL CROSS SECTION - THRU HEADWALL

4d1 BAR SPACING		
SPAN	SPACING	NO. OF BARS
5'-0	2 SPA. AT 1'-6	5
6'-0	3 SPA. AT 1'-4	6
8'-0	4 SPA. AT 1'-6	7
10'-0	6 SPA. AT 1'-4	9
12'-0	8 SPA. AT 1'-3	11

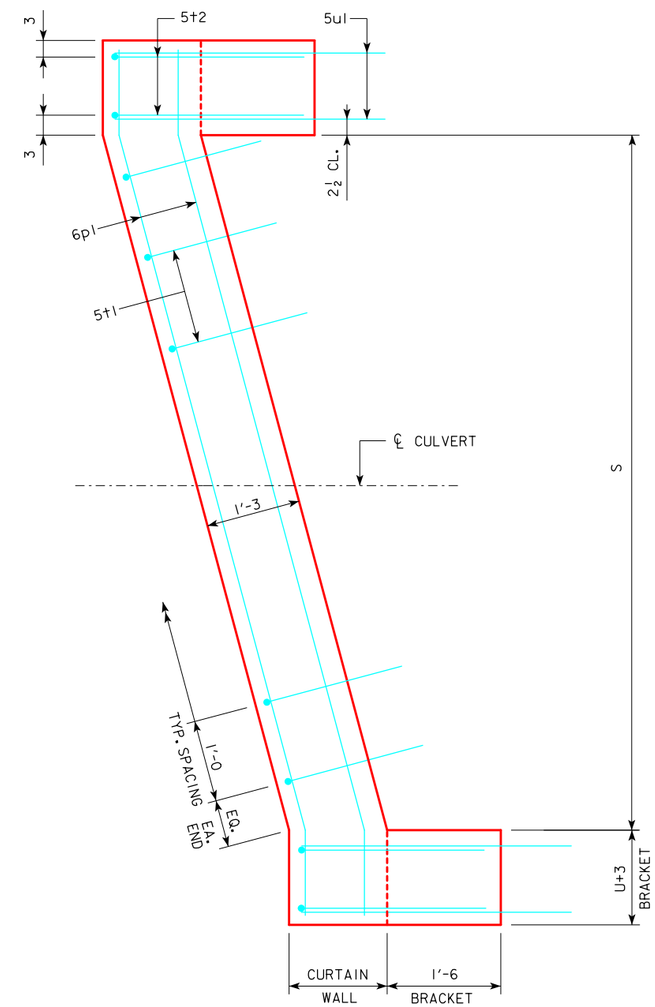

CURTAIN WALL DETAIL - PLAN VIEW

APRON IS NOT SHOWN

NOTES:

1. SEE DRAWING RCB-G1-12 AND RCB-G2-12 FOR GENERAL NOTES, SPECIFICATIONS, AND DESIGN STRESSES.
2. FOR DIMENSION TABLE SEE DRAWING PWH 15-1-12.

LATEST REVISION DATE

APPROVED BY BRIDGE ENGINEER

IOWA DOT Highway Division

STANDARD DESIGN - SINGLE REINFORCED CONCRETE BOX CULVERTS

PARALLEL WING HEADWALLS

APRIL, 2012

CROSS SECTION DETAILS 15° SKEW

PWH 15-2-12

ENGLISHLRFDSIGNEDSINGLECULVERTS.DGN - PWH 15-2-12 - THIS SHEET ISSUED 04-12.

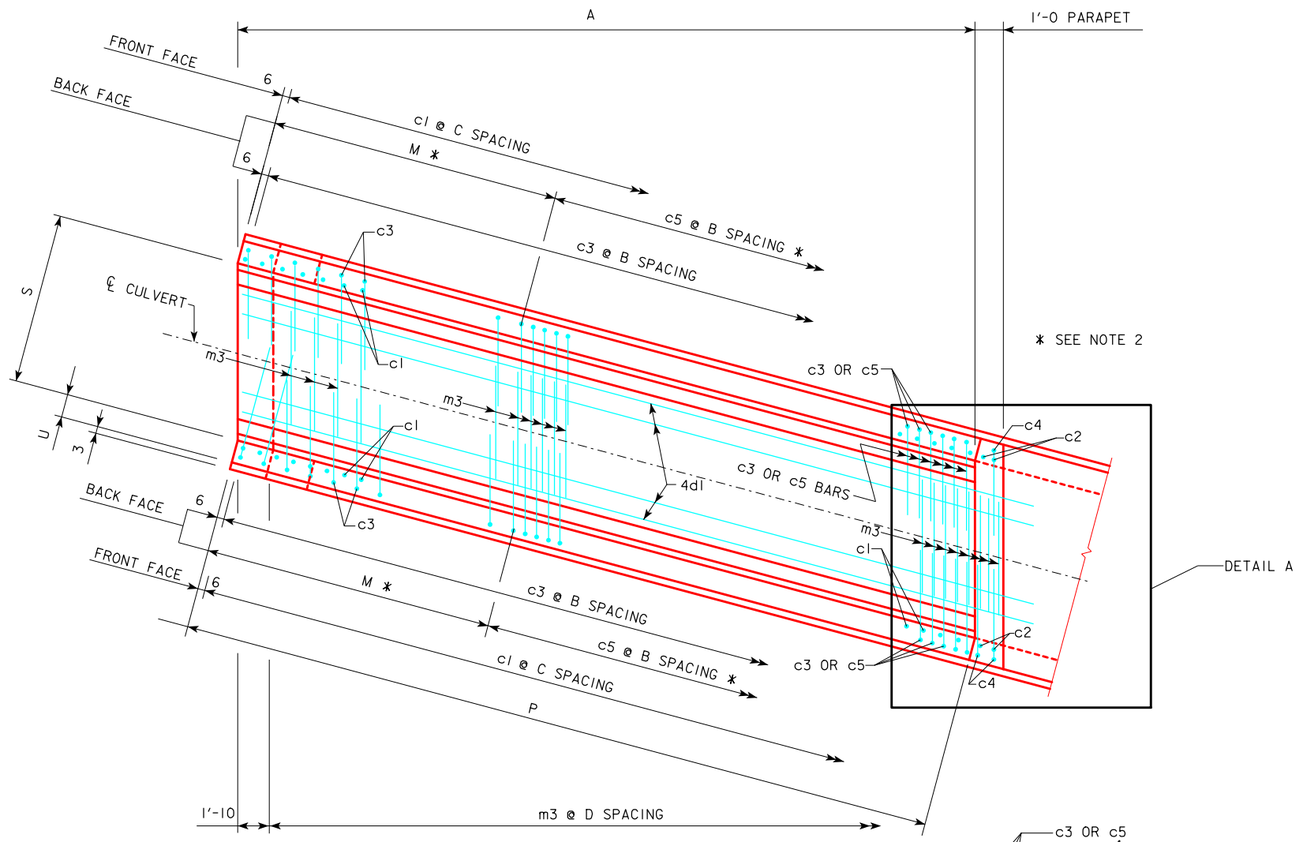

PLAN VIEW - BOTTOM APRON REINFORCING

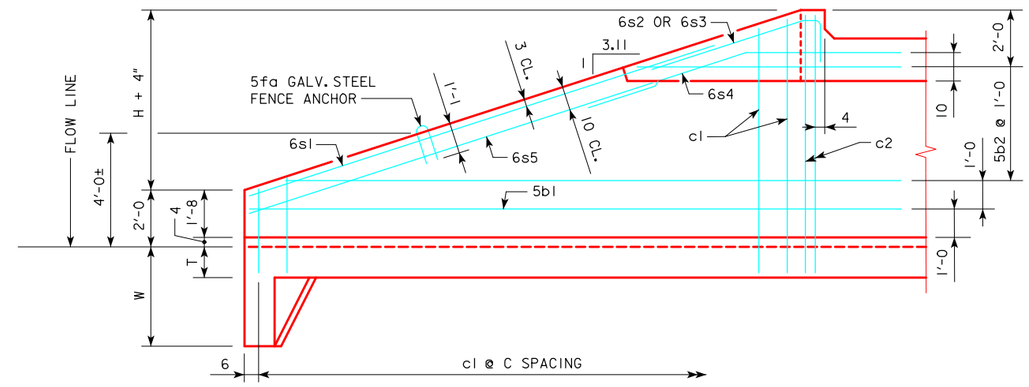

TYPICAL VIEW - FRONT FACE WINGWALL REINFORCING

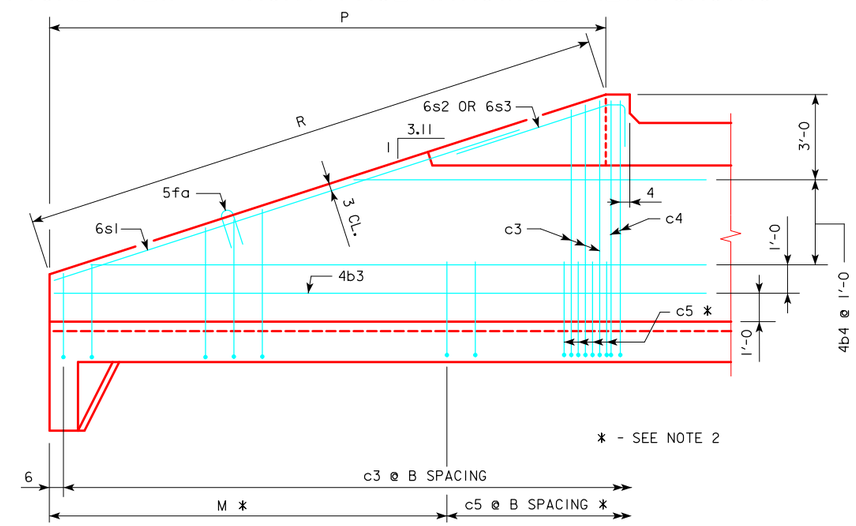

TYPICAL VIEW - BACK FACE WINGWALL REINFORCING

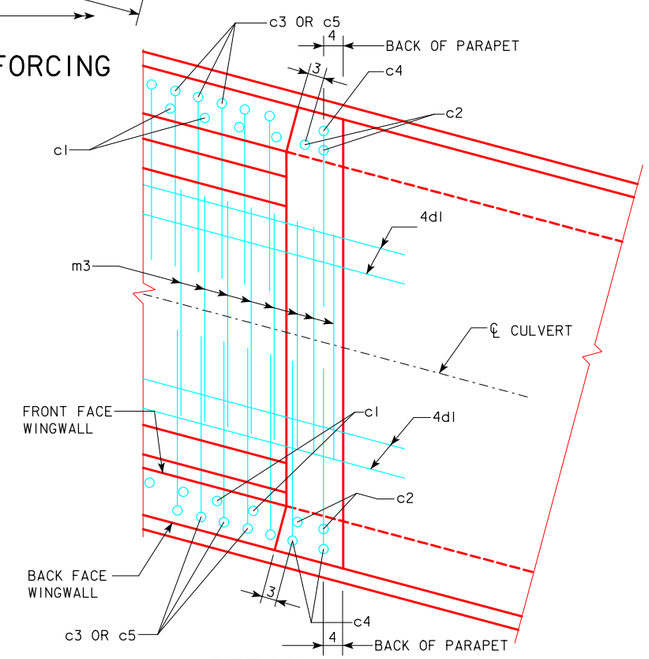

DETAIL A

NOTES :

1. BAR SPACINGS AND POSITIONS SHOWN ARE SIMILAR FOR ALL SIZES OF HEADWALLS IN THIS STANDARD.
2. NOT APPLICABLE FOR THE FOLLOWING HEADWALL SIZES: 12x4, 10x6, 10x5, 10x4, 8x6, 8x5, 8x4, 6x6, 6x5, 6x4, 6x3, 5x6, 5x5, 5x4, AND 5x3.
3. FOR HEADWALL DIMENSIONS AND BAR SPACING SEE DRAWING PWH 15-1-12.
4. WINGWALL BARS CONSISTENTLY REFERENCED FROM END OF WING FOR ALL WINGWALLS.
5. APRON m3 BARS ARE TO BE CENTERED ON ℄ CULVERT.
6. B.F.V. (c4) AND F.F.V. (c2) BARS ARE APPROXIMATELY 4" FROM THE BACK OF PARAPET FOR ALL HEADWALLS.

07-2016
LATEST REVISION DATE

APPROVED BY BRIDGE ENGINEER

IOWA DOT Highway Division

STANDARD DESIGN - SINGLE REINFORCED CONCRETE BOX CULVERTS

PARALLEL WING HEADWALLS

APRIL, 2012

WINGWALL ELEVATIONS & BOTTOM APRON REINFORCING 15° SKEW

PWH 15-3-12

REVISED 07-2016 - CHANGED 10" VERTICAL DIMENSION FROM PERMISSIBLE WALL CONSTRUCTION JOINT TO 6s4 BAR. (DIMENSION WAS 1'-8 VERTICAL FROM TOP OF PARAPET TO 6s4 BAR.)
ENGLISHLRFDSIGNEDSINGLECULVERTS.DGN - PWH 15-3-12 - THIS SHEET ISSUED 04-12.

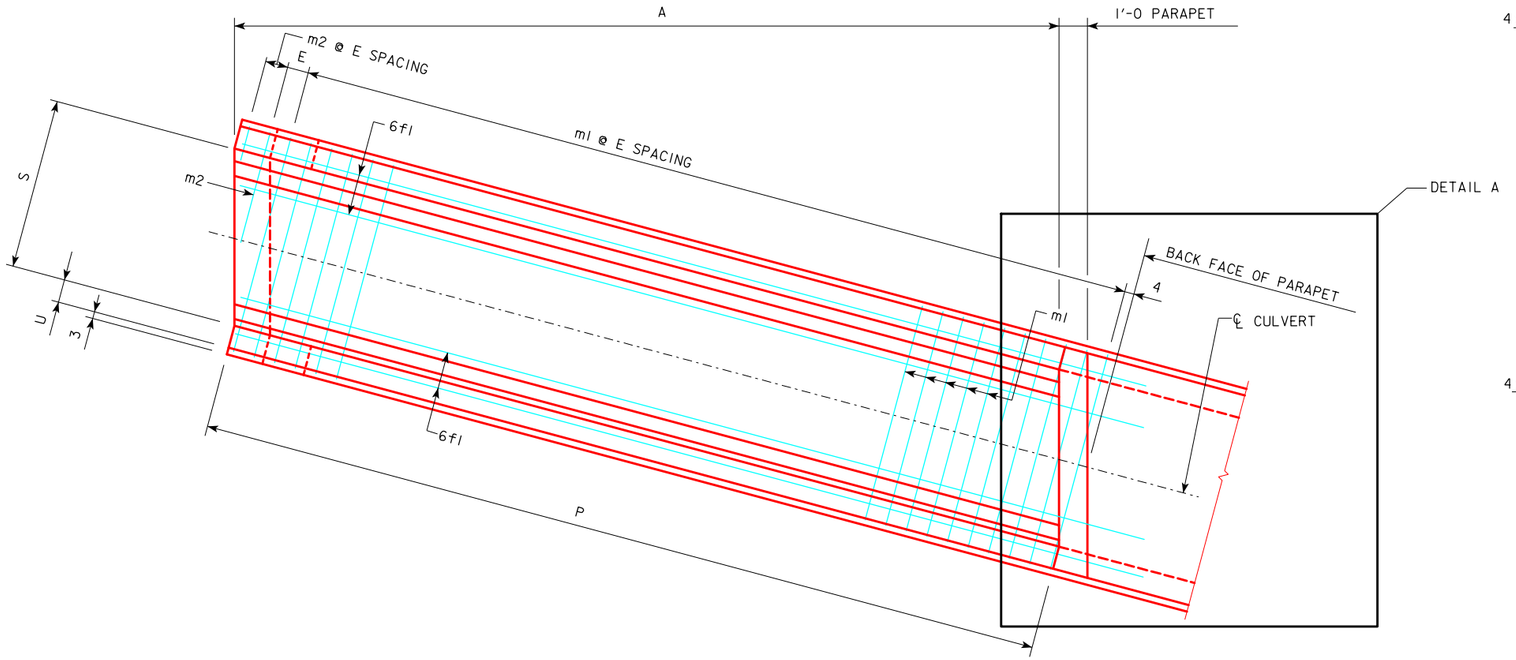

PLAN VIEW - TOP APRON REINFORCING

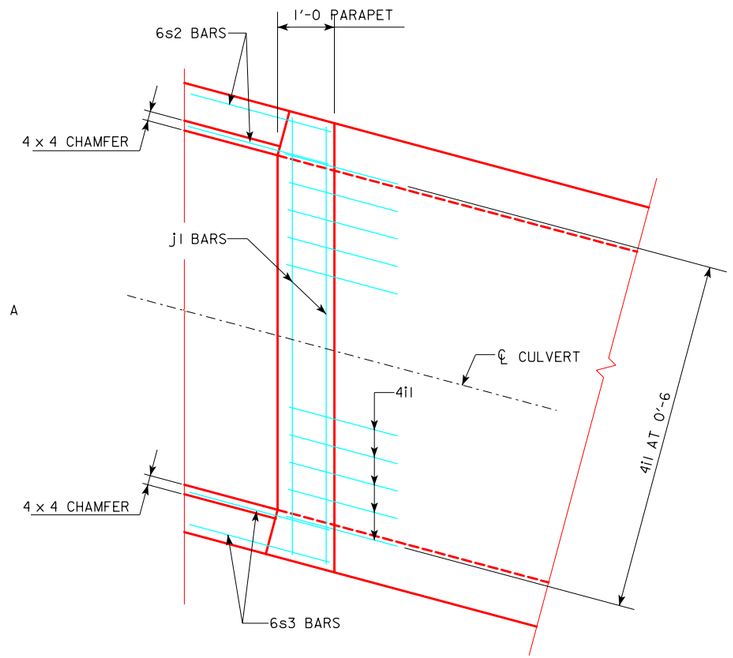

DETAIL A

SHOWING PARAPET BARS ONLY

NOTES :

1. BAR SPACINGS AND POSITIONS SHOWN ARE SIMILAR FOR ALL SIZES OF HEADWALLS IN THIS STANDARD.
2. FOR HEADWALL DIMENSIONS AND BAR SPACING SEE DRAWING PWH 15-1-12.
3. TOP TRANSVERSE APRON BARS ARE REFERENCED APPROXIMATELY 4" FROM THE BACK OF THE PARAPET FOR ALL HEADWALLS.

LATEST REVISION DATE

APPROVED BY BRIDGE ENGINEER

IOWA DOT Highway Division

STANDARD DESIGN - SINGLE REINFORCED CONCRETE BOX CULVERTS

PARALLEL WING HEADWALLS

APRIL, 2012

PARAPET REINFORCING & TOP APRON REINFORCING 15° SKEW

PWH 15-4-12

ENGLISHLRFDSIGNEDSINGLECULVERTS.DGN - PWH 15-4-12 - THIS SHEET ISSUED 04-12.

BILL OF REINFORCING FOR ONE HEADWALL 15° SKEW CULVERT SPAN x CULVERT HEIGHT

LOCATION	SHAPE	12′ x 12′				12′ x 11′				12′ x 10′			
		BAR	NO.	LENGTH	WT.	BAR	NO.	LENGTH	WT.	BAR	NO.	LENGTH	WT.
FENCE ANCHOR (GALV.)		5fa	2	2′-10	6	5fa	2	2′-10	6	5fa	2	2′-10	6
WINGWALL, F.F.H.		5b1	2	41′-3	90	5b1	2	38′-2	80	5b1	2	35′-0	73
WINGWALL, F.F.H.		5b2	22 VAR	2 EACH 9′-2:40′-2	570	5b2	20 VAR	2 EACH 9′-2:37′-1	482	5b2	18 VAR	2 EACH 9′-2:34′-0	405
WINGWALL, B.F.H.		4b3	2	41′-5	58	4b3	2	38′-3	51	4b3	2	35′-1	47
WINGWALL, B.F.H.		4b4	20 VAR	2 EACH 12′-5:40′-4	355	4b4	18 VAR	2 EACH 12′-5:37′-3	299	4b4	16 VAR	2 EACH 12′-4:34′-1	248
WINGWALL, F.F.V.		5c1	152 VAR	2 EACH 2′-9:14′-10	1394	6c1	70 VAR	2 EACH 2′-9:13′-8	863	6c1	64 VAR	2 EACH 2′-9:12′-9	745
WINGWALL, F.F.V. (O)		5c2	2	15′-0	31	6c2	2	14′-0	42	6c2	2	13′-0	39
WINGWALL, F.F.V. (A)		5c2	2	15′-0	31	6c2	2	14′-0	42	6c2	2	13′-0	39
WINGWALL, B.F.V.		6c3	76 VAR	2 EACH 6′-4:18′-3	1403	6c3	70 VAR	2 EACH 6′-4:17′-3	1240	6c3	64 VAR	2 EACH 6′-4:16′-4	1089
WINGWALL, B.F.V. (O)		6c4	1	18′-6	28	6c4	1	17′-6	26	6c4	2	16′-6	50
WINGWALL, B.F.V. (A)		6c4	2	18′-6	56	6c4	2	17′-6	53	6c4	2	16′-6	50
WINGWALL, B.F.V.		6c5	50	8′-6	638	6c5	46	8′-6	587	6c5	42	8′-6	536
APRON, LONGIT., BOTT.		4d1	11	41′-2	317	4d1	11	38′-1	280	4d1	11	35′-0	257
APRON, LONGIT., TOP		6f1	13	41′-2	843	6f1	13	38′-1	744	6f1	13	35′-0	683
PARAPET, VERTICAL		4i1	25	6′-7	110	4i1	25	6′-7	110	4i1	25	6′-7	110
PARAPET, HORIZ.		7j1	4	14′-2	116	7j1	4	14′-2	116	7j1	4	13′-10	113
APRON, TRANS., TOP		6m1	50	14′-2	1064	6m1	46	14′-2	979	6m1	42	13′-10	873
APRON, TRANS., TOP		6m2	4 VAR	4′-2:12′-6	50	6m2	4 VAR	3′-9:12′-2	48	6m2	4 VAR	3′-2:11′-7	44
APRON, TRANS., BOTT.		5m3	73	11′-5	869	6m3	34	12′-3	626	6m3	31	11′-11	555
CURTAIN, HORIZ.		6p1	6	14′-7	131	6p1	6	14′-7	131	6p1	6	14′-3	128
WING SLOPE, BOTH F.		6s1	4	36′-9	221	6s1	4	33′-5	201	6s1	4	30′-2	181
WING SLOPE, BOTH F. (O)		6s2	2	7′-10	24	6s2	2	7′-10	24	6s2	2	7′-11	24
WING SLOPE, BOTH F. (A)		6s3	2	8′-1	24	6s3	2	8′-1	24	6s3	2	8′-1	24
WING SLOPE, F. F.		6s4	2	11′-3	34	6s4	2	11′-3	34	6s4	2	11′-3	34
WING SLOPE, F. F.		6s5	2	34′-5	103	6s5	2	31′-2	94	6s5	2	27′-11	84
CURTAIN, VERT.		5t1	13	7′-11	107	5t1	13	7′-8	104	5t1	13	7′-5	101
CURTAIN, VERT., ENDS		5t2	4	7′-11	33	5t2	4	7′-8	32	5t2	4	7′-5	31
BRACKET, VERT.		5u1	4	6′-8	28	5u1	4	6′-5	27	5u1	4	6′-2	26

LOCATION	12′ x 9′				12′ x 8′				12′ x 7′			
	BAR	NO.	LENGTH	WT.	BAR	NO.	LENGTH	WT.	BAR	NO.	LENGTH	WT.
FENCE ANCHOR (GALV.)	5fa	2	2′-10	6	5fa	2	2′-10	6	5fa	2	2′-10	6
WINGWALL, F.F.H.	5b1	2	31′-11	67	5b1	2	28′-10	60	5b1	2	25′-8	54
WINGWALL, F.F.H.	5b2	16 VAR	2 EACH 9′-2:30′-11	334	5b2	14 VAR	2 EACH 9′-2:27′-9	270	5b2	12 VAR	2 EACH 9′-2:24′-8	212
WINGWALL, B.F.H.	4b3	2	32′-0	43	4b3	2	28′-11	39	4b3	2	25′-9	34
WINGWALL, B.F.H.	4b4	14 VAR	2 EACH 12′-4:31′-0	203	4b4	12 VAR	2 EACH 12′-4:27′-11	161	4b4	10 VAR	2 EACH 12′-4:24′-9	124
WINGWALL, F.F.V.	5c1	58 VAR	2 EACH 2′-9:11′-9	439	5c1	52 VAR	2 EACH 2′-9:10′-10	368	4c1	46 VAR	2 EACH 2′-9:9′-10	193
WINGWALL, F.F.V. (O)	5c2	2	12′-0	25	5c2	2	11′-0	23	4c2	2	10′-0	13
WINGWALL, F.F.V. (A)	5c2	2	12′-0	25	5c2	2	11′-0	23	4c2	2	10′-0	13
WINGWALL, B.F.V.	5c3	58 VAR	2 EACH 6′-4:15′-4	655	5c3	52 VAR	2 EACH 6′-4:14′-5	563	5c3	46 VAR	2 EACH 6′-4:13′-5	474
WINGWALL, B.F.V. (O)	5c4	2	15′-6	32	5c4	2	14′-6	30	5c4	2	13′-6	28
WINGWALL, B.F.V. (A)	5c4	2	15′-6	32	5c4	2	14′-6	30	5c4	2	13′-6	28
WINGWALL, B.F.V.	5c5	36	8′-6	319	5c5	34	8′-6	301	5c5	30	8′-6	266
APRON, LONGIT., BOTT.	4d1	11	31′-10	234	4d1	11	28′-9	211	4d1	11	25′-8	189
APRON, LONGIT., TOP	6f1	13	31′-10	622	6f1	13	28′-9	561	6f1	13	25′-8	501
PARAPET, VERTICAL	4i1	25	6′-7	110	4i1	25	6′-7	110	4i1	25	6′-7	110
PARAPET, HORIZ.	7j1	4	13′-10	113	7j1	4	13′-10	113	7j1	4	13′-8	112
APRON, TRANS., TOP	6m1	38	13′-10	790	6m1	34	13′-10	706	6m1	30	13′-8	616
APRON, TRANS., TOP	6m2	4 VAR	2′-10:11′-2	42	6m2	4 VAR	2′-5:10′-10	40	6m2	3 VAR	4′-9:10′-4	34
APRON, TRANS., BOTT.	5m3	28	11′-1	324	4m3	25	10′-2	170	4m3	22	10′-0	147
CURTAIN, HORIZ.	6p1	6	14′-3	128	6p1	6	14′-3	128	6p1	5	14′-1	106
WING SLOPE, BOTH F.	6s1	4	26′-11	162	6s1	4	23′-8	142	6s1	4	20′-5	123
WING SLOPE, BOTH F. (O)	6s2	2	7′-11	24	6s2	2	7′-11	24	6s2	2	7′-10	24
WING SLOPE, BOTH F. (A)	6s3	2	8′-1	24	6s3	2	8′-1	24	6s3	2	8′-0	24
WING SLOPE, F. F.	6s4	2	11′-3	34	6s4	2	11′-3	34	6s4	2	11′-3	34
WING SLOPE, F. F.	6s5	2	24′-8	74	6s5	2	21′-5	64	6s5	2	18′-1	54
CURTAIN, VERT.	5t1	13	7′-2	97	5t1	13	6′-11	94	5t1	13	6′-8	90
CURTAIN, VERT., ENDS	5t2	4	7′-2	30	5t2	4	6′-11	29	5t2	4	6′-8	28
BRACKET, VERT.	5u1	4	6′-0	25	5u1	4	5′-9	24	5u1	4	5′-7	23

LOCATION	12′ x 6′				12′ x 5′				12′ x 4′			
	BAR	NO.	LENGTH	WT.	BAR	NO.	LENGTH	WT.	BAR	NO.	LENGTH	WT.
FENCE ANCHOR (GALV.)	5fa	2	2′-10	6	5fa	2	2′-10	6	5fa	2	2′-10	6
WINGWALL, F.F.H.	5b1	2	22′-7	47	5b1	2	19′-6	41	5b1	2	16′-5	34
WINGWALL, F.F.H.	5b2	10 VAR	2 EACH 9′-2:21′-7	160	5b2	8 VAR	2 EACH 9′-2:18′-5	115	5b2	6 VAR	2 EACH 9′-2:15′-4	77
WINGWALL, B.F.H.	4b3	2	22′-8	30	4b3	2	19′-7	26	4b3	2	16′-6	22
WINGWALL, B.F.H.	4b4	8 VAR	2 EACH 12′-4:21′-8	91	4b4	6 VAR	2 EACH 12′-4:18′-6	62	4b4	4 VAR	2 EACH 12′-4:15′-5	37
WINGWALL, F.F.V.	4c1	40 VAR	2 EACH 2′-9:8′-10	155	4c1	34 VAR	2 EACH 2′-9:7′-11	121	4c1	26 VAR	2 EACH 2′-9:6′-7	81
WINGWALL, F.F.V. (O)	4c2	2	9′-0	12	4c2	2	8′-0	11	4c2	2	7′-0	9
WINGWALL, F.F.V. (A)	4c2	2	9′-0	12	4c2	2	8′-0	11	4c2	2	7′-0	9
WINGWALL, B.F.V.	5c3	40 VAR	2 EACH 6′-4:12′-5	391	5c3	34 VAR	2 EACH 6′-4:11′-6	316	6c3	26 VAR	2 EACH 6′-4:10′-2	322
WINGWALL, B.F.V. (O)	5c4	2	12′-6	26	5c4	2	11′-6	24	6c4	2	10′-6	32
WINGWALL, B.F.V. (A)	5c4	2	12′-6	26	5c4	2	11′-6	24	6c4	2	10′-6	32
WINGWALL, B.F.V.	5c5	26	8′-6	231	5c5	22	8′-2	187	c5	–	–	–
APRON, LONGIT., BOTT.	4d1	11	22′-6	165	4d1	11	19′-5	143	4d1	11	16′-4	120
APRON, LONGIT., TOP	6f1	13	22′-6	439	6f1	13	19′-5	379	6f1	13	16′-4	319
PARAPET, VERTICAL	4i1	25	6′-7	110	4i1	25	6′-7	110	4i1	25	6′-7	110
PARAPET, HORIZ.	7j1	4	13′-8	112	7j1	4	13′-8	112	7j1	4	13′-8	112
APRON, TRANS., TOP	6m1	26	13′-8	534	6m1	21	13′-8	431	6m1	17	13′-8	349
APRON, TRANS., TOP	6m2	3 VAR	4′-4:9′-11	32	6m2	4 VAR	3′-11:12′-4	49	6m2	4 VAR	3′-6:11′-11	46
APRON, TRANS., BOTT.	4m3	19	10′-0	127	4m3	16	10′-0	107	4m3	13	10′-0	87
CURTAIN, HORIZ.	6p1	5	14′-1	106	6p1	5	14′-1	106	6p1	5	14′-1	106
WING SLOPE, BOTH F.	6s1	4	17′-2	103	6s1	4	13′-11	84	6s1	4	10′-7	64
WING SLOPE, BOTH F. (O)	6s2	2	7′-10	24	6s2	2	7′-10	24	6s2	2	7′-10	24
WING SLOPE, BOTH F. (A)	6s3	2	8′-0	24	6s3	2	8′-0	24	6s3	2	8′-0	24
WING SLOPE, F. F.	6s4	2	11′-3	34	6s4	2	11′-3	34	6s4	2	11′-3	34
WING SLOPE, F. F.	6s5	2	14′-10	45	6s5	2	11′-7	35	6s5	2	8′-4	25
CURTAIN, VERT.	5t1	13	6′-5	87	5t1	13	6′-5	87	5t1	13	6′-5	87
CURTAIN, VERT., ENDS	5t2	4	6′-5	27	5t2	4	6′-5	27	5t2	4	6′-5	27
BRACKET, VERT.	5u1	4	5′-4	22	5u1	4	5′-4	22	5u1	4	5′-4	22

ESTIMATED QUANTITIES ONE HEADWALL		12′ x 12′			12′ x 11′			12′ x 10′			12′ x 9′		
REINF. STEEL		8734 LBS.			7345 LBS.			6595 LBS.			5013 LBS.		
CONCRETE	PARAPET Δ	1.7	53.4 CU.YD.	PARAPET Δ	1.7	47.9 CU.YD.	PARAPET Δ	1.6	39.2 CU.YD.	PARAPET Δ	1.6	34.8 CU.YD.	
	WINGWALLS	22.5		WINGWALLS	19.3		WINGWALLS	13.6		WINGWALLS	11.4		
	APRON	29.2		APRON	26.9		APRON	24.0		APRON	21.8		

ESTIMATED QUANTITIES ONE HEADWALL	12′ x 8′			12′ x 7′			12′ x 6′			12′ x 5′			12′ x 4′		
REINF. STEEL	4348 LBS.			3660 LBS.			3178 LBS.			2718 LBS.			2217 LBS.		
CONCRETE	PARAPET Δ	1.6	30.5 CU.YD.	PARAPET Δ	1.5	25.4 CU.YD.	PARAPET Δ	1.5	21.6 CU.YD.	PARAPET Δ	1.5	18.3 CU.YD.	PARAPET Δ	1.5	15.1 CU.YD.
	WINGWALLS	9.3		WINGWALLS	6.7		WINGWALLS	5.1		WINGWALLS	3.8		WINGWALLS	2.6	
	APRON	19.6		APRON	17.2		APRON	15.0		APRON	13.0		APRON	11.0	

Δ INCLUDES TOP OF WINGWALL QUANTITIES.

NOTE: WEIGHT OF BARS OVER 40′-0 LONG INCLUDE AN ALLOWANCE OF 2′-0 FOR LAP.

(A) - INDICATES BAR LOCATED AT ACUTE CORNER.
(O) - INDICATES BAR LOCATED AT OBTUSE CORNER.
REFER TO SHEET PWH 15-1-12 FOR ACUTE AND OBTUSE CORNER LOCATIONS.

BENT BAR DETAILS

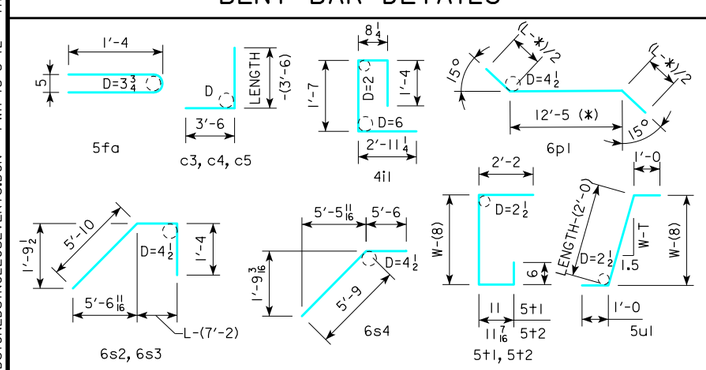

NOTE: ALL DIMENSIONS ARE OUT TO OUT
D = PIN DIAMETER
SEE TABLE AT RIGHT FOR PIN DIAMETER "D" OF c BARS

c BAR PIN DIAMETER	
BAR SIZE	D
4	3
5	3¾
6	4½

HEADWALL NOTES:

THIS HEADWALL IS BASED ON A 3:1 SLOPE NORMAL TO CENTERLINE OF ROADWAY.

THE SIDES OF THE FOOTING ARE TO BE FORMED TO INSURE CORRECT LINE AND GRADE.

ALL EXPOSED CORNERS OF 90° OR SHARPER ARE TO BE FILLETED WITH A ¾" DRESSED AND BEVELED STRIP.

ALL REINFORCING IS TO BE SECURELY WIRED IN PLACE BEFORE THE CONCRETE IS POURED. ALL SLAB AND FLOOR REINFORCING STEEL IS TO BE SUPPORTED BY BAR CHAIRS AT INTERVALS OF NOT MORE THAN 3′-0 IN EITHER DIRECTION AS OUTLINED IN THE STANDARD SPECIFICATIONS.

CLEAR DISTANCE FROM FACE OF CONCRETE TO NEAR REINFORCING BAR IS TO BE 2" UNLESS OTHERWISE NOTED OR SHOWN. CLEARANCE TO THE BOTTOM ENDS OF VERTICAL BARS SHALL BE 3 INCHES.

CONCRETE QUANTITIES ARE ESTIMATED FROM BACK OF PARAPET.

HORIZONTAL TAILS OF BARS "b" & "s" ESTIMATED TO EXTEND 2′-0 BEYOND BACK OF PARAPET (INTO END OF BARREL). LONGITUDINAL BARS "4d1" AND "6f1" ESTIMATED TO PROJECT INTO END SECTION OF BARREL A MINIMUM OF 2′-0 BEYOND BACK OF PARAPET. THE "LENGTH" COLUMN REFLECTS TOTAL NUMBER OF FEET NECESSARY TO MEET THESE REQUIREMENTS.

07-2016
LATEST REVISION DATE

APPROVED BY BRIDGE ENGINEER

IOWA DOT Highway Division

STANDARD DESIGN - SINGLE REINFORCED CONCRETE BOX CULVERTS

PARALLEL WING HEADWALLS

APRIL, 2012

QUANTITY TABULATION
12′-0 SPAN
15° SKEW

PWH 15-5-12

REVISED 07-2016 - CHANGED FENCE ANCHOR BAR (5fa) FROM 3′-1 TO 2′-10.
ENGLISHLRFDSIGNEDSINGLECULVERTS.DGN - PWH 15-5-12 - THIS SHEET ISSUED 04-12.

BILL OF REINFORCING FOR ONE HEADWALL 15° SKEW CULVERT SPAN x CULVERT HEIGHT

LOCATION	SHAPE	10′ x 12′				10′ x 11″				10′ x 10′			
		BAR	NO.	LENGTH	WT.	BAR	NO.	LENGTH	WT.	BAR	NO.	LENGTH	WT.
FENCE ANCHOR (GALV.)		5fa	2	2′-10	6	5fa	2	2′-10	6	5fa	2	2′-10	6
WINGWALL, F.F.H.		5b1	2	41′-3	90	5b1	2	38′-2	80	5b1	2	35′-0	73
WINGWALL, F.F.H.		5b2	22 VAR	2 EACH 9′-2:40′-2	570	5b2	20 VAR	2 EACH 9′-2:37′-1	482	5b2	18 VAR	2 EACH 9′-2:34′-0	405
WINGWALL, B.F.H.		4b3	2	41′-5	58	4b3	2	38′-3	51	4b3	2	35′-1	47
WINGWALL, B.F.H.		4b4	20 VAR	2 EACH 12′-5:40′-4	355	4b4	18 VAR	2 EACH 12′-5:37′-3	299	4b4	16 VAR	2 EACH 12′-4:34′-1	248
WINGWALL, F.F.V.		5c1	152 VAR	2 EACH 2′-8:14′-9	1381	6c1	70 VAR	2 EACH 2′-8:13′-7	854	5c1	86 VAR	2 EACH 2′-8:12′-10	695
WINGWALL, F.F.V. (O)		5c2	2	14′-11	31	6c2	2	13′-11	42	5c2	2	12′-11	27
WINGWALL, F.F.V. (A)		5c2	2	14′-11	31	6c2	2	13′-11	42	5c2	2	12′-11	27
WINGWALL, B.F.V.		6c3	76 VAR	2 EACH 6′-9:18′-8	1451	6c3	70 VAR	2 EACH 6′-9:17′-8	1284	6c3	64 VAR	2 EACH 6′-9:16′-9	1130
WINGWALL, B.F.V. (O)		6c4	1	18′-11	28	6c4	1	17′-11	27	6c4	2	16′-11	51
WINGWALL, B.F.V. (A)		6c4	2	18′-11	57	6c4	2	17′-11	54	6c4	2	16′-11	51
WINGWALL, B.F.V.		6c5	50	9′-0	676	6c5	46	9′-0	622	6c5	42	9′-0	568
APRON, LONGIT., BOTT.		4d1	9	41′-2	260	4d1	9	38′-1	229	4d1	9	35′-0	210
APRON, LONGIT., TOP		6f1	11	41′-2	713	6f1	11	38′-1	629	6f1	11	35′-0	578
PARAPET, VERTICAL		4i1	21	6′-7	92	4i1	21	6′-7	92	4i1	21	6′-7	92
PARAPET, HORIZ.		7j1	4	12′-1	99	7j1	4	12′-1	99	7j1	4	11′-9	96
APRON, TRANS., TOP		6m1	51	12′-2	932	6m1	47	12′-2	859	6m1	42	11′-10	746
APRON, TRANS., TOP		6m2	3 VAR	3′-2:8′-9	27	6m2	3 VAR	2′-9:8′-4	25	6m2	4 VAR	2′-2:10′-7	38
APRON, TRANS., BOTT.		5m3	73	8′-4	634	6m3	34	9′-2	468	6m3	31	8′-10	411
CURTAIN, HORIZ.		6p1	6	12′-6	113	6p1	6	12′-6	113	6p1	6	12′-2	110
WING SLOPE, BOTH F.		6s1	4	36′-9	221	6s1	4	33′-5	201	6s1	4	30′-2	181
WING SLOPE, BOTH F. (O)		6s2	2	7′-10	24	6s2	2	7′-10	24	6s2	2	7′-11	24
WING SLOPE, BOTH F. (A)		6s3	2	8′-1	24	6s3	2	8′-1	24	6s3	2	8′-1	24
WING SLOPE, F. F.		6s4	2	11′-3	34	6s4	2	11′-3	34	6s4	2	11′-3	34
WING SLOPE, F. F.		6s5	2	34′-5	103	6s5	2	31′-2	94	6s5	2	27′-11	84
CURTAIN, VERT.		5t1	11	7′-11	91	5t1	11	7′-8	88	5t1	11	7′-5	85
CURTAIN, VERT., ENDS		5t2	4	7′-11	33	5t2	4	7′-8	32	5t2	4	7′-5	31
BRACKET, VERT.		5u1	4	6′-8	28	5u1	4	6′-5	27	5u1	4	6′-2	26

LOCATION	10′ x 9′				10′ x 8′				10′ x 7′			
	BAR	NO.	LENGTH	WT.	BAR	NO.	LENGTH	WT.	BAR	NO.	LENGTH	WT.
FENCE ANCHOR (GALV.)	5fa	2	2′-10	6	5fa	2	2′-10	6	5fa	2	2′-10	6
WINGWALL, F.F.H.	5b1	2	31′-11	67	5b1	2	28′-10	60	5b1	2	25′-8	54
WINGWALL, F.F.H.	5b2	16 VAR	2 EACH 9′-2:30′-11	334	5b2	14 VAR	2 EACH 9′-2:27′-9	270	5b2	12 VAR	2 EACH 9′-2:24′-8	212
WINGWALL, B.F.H.	4b3	2	32′-0	43	4b3	2	28′-11	39	4b3	2	25′-9	34
WINGWALL, B.F.H.	4b4	14 VAR	2 EACH 12′-4:31′-0	203	4b4	12 VAR	2 EACH 12′-4:27′-11	161	4b4	10 VAR	2 EACH 12′-4:24′-9	124
WINGWALL, F.F.V.	5c1	76 VAR	2 EACH 2′-8:11′-7	565	5c1	52 VAR	2 EACH 2′-8:10′-9	364	4c1	46 VAR	2 EACH 2′-8:9′-9	191
WINGWALL, F.F.V. (O)	5c2	2	11′-11	25	5c2	2	10′-11	23	4c2	2	9′-11	13
WINGWALL, F.F.V. (A)	5c2	2	11′-11	25	5c2	2	10′-11	23	4c2	2	9′-11	13
WINGWALL, B.F.V.	5c3	58 VAR	2 EACH 6′-9:15′-9	681	5c3	52 VAR	2 EACH 6′-9:14′-10	585	5c3	46 VAR	2 EACH 6′-9:13′-10	494
WINGWALL, B.F.V. (O)	5c4	2	15′-11	33	5c4	2	14′-11	31	5c4	2	13′-11	29
WINGWALL, B.F.V. (A)	5c4	2	15′-11	33	5c4	2	14′-11	31	5c4	2	13′-11	29
WINGWALL, B.F.V.	5c5	36	9′-0	338	5c5	34	9′-0	319	5c5	30	9′-0	282
APRON, LONGIT., BOTT.	4d1	9	31′-10	191	4d1	9	28′-9	173	4d1	9	25′-8	154
APRON, LONGIT., TOP	6f1	11	31′-10	526	6f1	11	28′-9	475	6f1	11	25′-8	424
PARAPET, VERTICAL	4i1	21	6′-7	92	4i1	21	6′-7	92	4i1	21	6′-7	92
PARAPET, HORIZ.	7j1	4	11′-9	96	7j1	4	11′-9	96	7j1	4	11′-7	95
APRON, TRANS., TOP	6m1	38	11′-10	675	6m1	34	11′-10	604	6m1	30	11′-8	526
APRON, TRANS., TOP	6m2	3 VAR	4′-7:10′-2	33	6m2	3 VAR	4′-2:9′-10	32	6m2	3 VAR	3′-9:9′-4	29
APRON, TRANS., BOTT.	6m3	28	8′-10	371	5m3	25	8′-0	209	4m3	22	7′-0	103
CURTAIN, HORIZ.	6p1	6	12′-2	110	6p1	6	12′-2	110	6p1	5	12′-0	90
WING SLOPE, BOTH F.	6s1	4	26′-11	162	6s1	4	23′-8	142	6s1	4	20′-5	123
WING SLOPE, BOTH F. (O)	6s2	2	7′-11	24	6s2	2	7′-11	24	6s2	2	7′-10	24
WING SLOPE, BOTH F. (A)	6s3	2	8′-1	24	6s3	2	8′-1	24	6s3	2	8′-0	24
WING SLOPE, F. F.	6s4	2	11′-3	34	6s4	2	11′-3	34	6s4	2	11′-3	34
WING SLOPE, F. F.	6s5	2	24′-8	74	6s5	2	21′-5	64	6s5	2	18′-1	54
CURTAIN, VERT.	5t1	11	7′-2	82	5t1	11	6′-11	79	5t1	11	6′-8	76
CURTAIN, VERT., ENDS	5t2	4	7′-2	30	5t2	4	6′-11	29	5t2	4	6′-8	28
BRACKET, VERT.	5u1	4	6′-0	25	5u1	4	5′-9	24	5u1	4	5′-6	23

LOCATION	10′ x 6′				10′ x 5′				10′ x 4′			
	BAR	NO.	LENGTH	WT.	BAR	NO.	LENGTH	WT.	BAR	NO.	LENGTH	WT.
FENCE ANCHOR (GALV.)	5fa	2	2′-10	6	5fa	2	2′-10	6	5fa	2	2′-10	6
WINGWALL, F.F.H.	5b1	2	22′-7	47	5b1	2	19′-6	41	5b1	2	16′-5	34
WINGWALL, F.F.H.	5b2	10 VAR	2 EACH 9′-2:21′-7	160	5b2	8 VAR	2 EACH 9′-2:18′-5	115	5b2	6 VAR	2 EACH 9′-2:15′-4	77
WINGWALL, B.F.H.	4b3	2	22′-8	30	4b3	2	19′-7	26	4b3	2	16′-6	22
WINGWALL, B.F.H.	4b4	8 VAR	2 EACH 12′-4:21′-8	91	4b4	6 VAR	2 EACH 12′-4:18′-6	62	4b4	4 VAR	2 EACH 12′-4:15′-5	37
WINGWALL, F.F.V.	4c1	40 VAR	2 EACH 2′-8:8′-9	153	4c1	34 VAR	2 EACH 2′-8:7′-10	119	4c1	26 VAR	2 EACH 2′-8:6′-6	80
WINGWALL, F.F.V. (O)	4c2	2	8′-11	12	4c2	2	7′-11	11	4c2	2	6′-11	9
WINGWALL, F.F.V. (A)	4c2	2	8′-11	12	4c2	2	7′-11	11	4c2	2	6′-11	9
WINGWALL, B.F.V.	6c3	40 VAR	2 EACH 6′-9:12′-10	588	6c3	34 VAR	2 EACH 6′-9:11′-11	477	5c3	26 VAR	2 EACH 6′-9:10′-7	235
WINGWALL, B.F.V. (O)	6c4	2	12′-11	39	6c4	2	11′-11	36	5c4	2	10′-11	23
WINGWALL, B.F.V. (A)	6c4	2	12′-11	39	6c4	2	11′-11	36	5c4	2	10′-11	23
WINGWALL, B.F.V.	c5	—	—	—	c5	—	—	—	c5	—	—	—
APRON, LONGIT., BOTT.	4d1	9	22′-6	135	4d1	9	19′-5	117	4d1	9	16′-4	98
APRON, LONGIT., TOP	6f1	11	22′-6	372	6f1	11	19′-5	321	6f1	11	16′-4	270
PARAPET, VERTICAL	4i1	21	6′-7	92	4i1	21	6′-7	92	4i1	21	6′-7	92
PARAPET, HORIZ.	7j1	4	11′-7	95	7j1	4	11′-7	95	7j1	4	11′-7	95
APRON, TRANS., TOP	6m1	26	11′-8	456	6m1	22	11′-8	386	6m1	18	11′-8	315
APRON, TRANS., TOP	6m2	3 VAR	3′-4:8′-11	28	6m2	3 VAR	2′-11:8′-6	26	6m2	3 VAR	2′-6:8′-2	24
APRON, TRANS., BOTT.	4m3	19	7′-0	89	4m3	16	7′-0	75	4m3	13	7′-0	61
CURTAIN, HORIZ.	6p1	5	12′-0	90	6p1	5	12′-0	90	6p1	5	12′-0	90
WING SLOPE, BOTH F.	6s1	4	17′-2	103	6s1	4	13′-11	84	6s1	4	10′-7	64
WING SLOPE, BOTH F. (O)	6s2	2	7′-10	24	6s2	2	7′-10	24	6s2	2	7′-10	24
WING SLOPE, BOTH F. (A)	6s3	2	8′-0	24	6s3	2	8′-0	24	6s3	2	8′-0	24
WING SLOPE, F. F.	6s4	2	11′-3	34	6s4	2	11′-3	34	6s4	2	8′-4	25
WING SLOPE, F. F.	6s5	2	14′-10	45	6s5	2	11′-7	35	6s5	2	8′-4	25
CURTAIN, VERT.	5t1	11	6′-5	74	5t1	11	6′-5	74	5t1	11	6′-5	74
CURTAIN, VERT., ENDS	5t2	4	6′-5	27	5t2	4	6′-5	27	5t2	4	6′-5	27
BRACKET, VERT.	5u1	4	5′-4	22	5u1	4	5′-4	22	5u1	4	5′-4	22

ESTIMATED QUANTITIES ONE HEADWALL		10′ x 12′			10′ x 11″			10′ x 10′			10′ x 9′		
REINF. STEEL		8162 LBS.			6881 LBS.			6098 LBS.			4902 LBS.		
CONCRETE		PARAPET Δ	1.6	48.1 CU.YD.	PARAPET Δ	1.6	43.0 CU.YD.	PARAPET Δ	1.4	34.6 CU.YD.	PARAPET Δ	1.4	30.7 CU.YD.
		WINGWALLS	22.5		WINGWALLS	19.3		WINGWALLS	13.6		WINGWALLS	11.4	
		APRON	24.0		APRON	22.1		APRON	19.6		APRON	17.9	

ESTIMATED QUANTITIES ONE HEADWALL	10′ x 8′			10′ x 7′			10′ x 6′			10′ x 5′			10′ x 4′		
REINF. STEEL	4123 LBS.			3380 LBS.			2887 LBS.			2466 LBS.			1894 LBS.		
CONCRETE	PARAPET Δ	1.4	26.8 CU.YD.	PARAPET Δ	1.4	22.1 CU.YD.	PARAPET Δ	1.4	18.7 CU.YD.	PARAPET Δ	1.4	15.8 CU.YD.	PARAPET Δ	1.4	13.0 CU.YD.
	WINGWALLS	9.3		WINGWALLS	6.7		WINGWALLS	5.1		WINGWALLS	3.8		WINGWALLS	2.6	
	APRON	16.1		APRON	14.0		APRON	12.2		APRON	10.6		APRON	9.0	

Δ INCLUDES TOP OF WINGWALL QUANTITIES.

NOTE: WEIGHT OF BARS OVER 40′-0 LONG INCLUDE AN ALLOWANCE OF 2′-0 FOR LAP.

(A) - INDICATES BAR LOCATED AT ACUTE CORNER.
(O) - INDICATES BAR LOCATED AT OBTUSE CORNER.
REFER TO SHEET PWH 15-1-12 FOR ACUTE AND OBTUSE CORNER LOCATIONS.

BENT BAR DETAILS

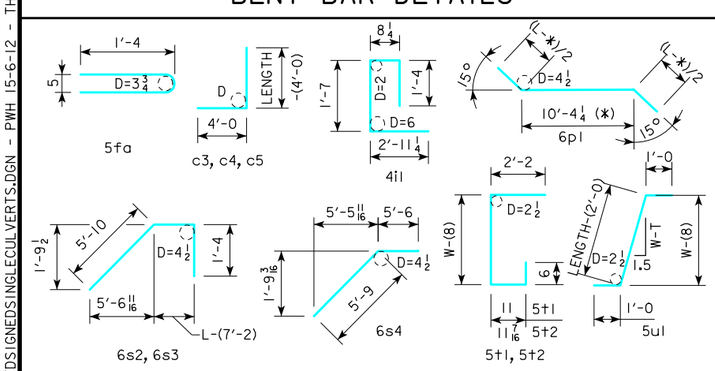

NOTE: ALL DIMENSIONS ARE OUT TO OUT
D = PIN DIAMETER
SEE TABLE AT RIGHT FOR PIN DIAMETER "D" OF c BARS

c BAR PIN DIAMETER	
BAR SIZE	D
4	3
5	3¾
6	4½

HEADWALL NOTES:

THIS HEADWALL IS BASED ON A 3:1 SLOPE NORMAL TO CENTERLINE OF ROADWAY.

THE SIDES OF THE FOOTING ARE TO BE FORMED TO INSURE CORRECT LINE AND GRADE.

ALL EXPOSED CORNERS OF 90° OR SHARPER ARE TO BE FILLETED WITH A ¾" DRESSED AND BEVELED STRIP.

ALL REINFORCING IS TO BE SECURELY WIRED IN PLACE BEFORE THE CONCRETE IS POURED. ALL SLAB AND FLOOR REINFORCING STEEL IS TO BE SUPPORTED BY BAR CHAIRS AT INTERVALS OF NOT MORE THAN 3′-0 IN EITHER DIRECTION AS OUTLINED IN THE STANDARD SPECIFICATIONS.

CLEAR DISTANCE FROM FACE OF CONCRETE TO NEAR REINFORCING BAR IS TO BE 2" UNLESS OTHERWISE NOTED OR SHOWN. CLEARANCE TO THE BOTTOM ENDS OF VERTICAL BARS SHALL BE 3 INCHES.

CONCRETE QUANTITIES ARE ESTIMATED FROM BACK OF PARAPET.

HORIZONTAL TAILS OF BARS "b" & "s" ESTIMATED TO EXTEND 2′-0 BEYOND BACK OF PARAPET (INTO END OF BARREL). LONGITUDINAL BARS "4d1" AND "6f1" ESTIMATED TO PROJECT INTO END SECTION OF BARREL A MINIMUM OF 2′-0 BEYOND BACK OF PARAPET. THE "LENGTH" COLUMN REFLECTS TOTAL NUMBER OF FEET NECESSARY TO MEET THESE REQUIREMENTS.

07-2016
LATEST REVISION DATE

APPROVED BY BRIDGE ENGINEER

IOWA DOT Highway Division

STANDARD DESIGN - SINGLE REINFORCED CONCRETE BOX CULVERTS

PARALLEL WING HEADWALLS

APRIL, 2012

QUANTITY TABULATION
10′-0 SPAN
15° SKEW

PWH 15-6-12

REVISED 07-2016 - CHANGED FENCE ANCHOR BAR (5fa) FROM 3′-1 TO 2′-10.
ENGLISHLRFDSIGNEDSINGLECULVERTS.DGN - PWH 15-6-12 - THIS SHEET ISSUED 04-12.

BILL OF REINFORCING FOR ONE HEADWALL 15° SKEW CULVERT SPAN x CULVERT HEIGHT

LOCATION	SHAPE	8′ x 10′				8′ x 9″				8′ x 8′			
		BAR	NO.	LENGTH	WT.	BAR	NO.	LENGTH	WT.	BAR	NO.	LENGTH	WT.
FENCE ANCHOR (GALV.)		5fa	2	2′-10	6	5fa	2	2′-10	6	5fa	2	2′-10	6
WINGWALL, F.F.H.		5b1	2	35′-0	73	5b1	2	31′-11	67	5b1	2	28′-10	60
WINGWALL, F.F.H.		5b2	18 VAR	2 EACH 9′-2:34′-0	405	5b2	16 VAR	2 EACH 9′-2:30′-11	334	5b2	14 VAR	2 EACH 9′-2:27′-9	270
WINGWALL, B.F.H.		4b3	2	35′-1	47	4b3	2	32′-0	43	4b3	2	28′-11	39
WINGWALL, B.F.H.		4b4	16 VAR	2 EACH 12′-4:34′-1	248	4b4	14 VAR	2 EACH 12′-4:31′-0	203	4b4	12 VAR	2 EACH 12′-4:27′-11	161
WINGWALL, F.F.V.		5c1	128 VAR	2 EACH 2′-6:12′-8	1012	5c1	76 VAR	2 EACH 2′-6:11′-5	552	5c1	52 VAR	2 EACH 2′-6:10′-7	355
WINGWALL, F.F.V. (O)		5c2	2	12′-9	27	5c2	2	11′-9	25	5c2	2	10′-9	22
WINGWALL, F.F.V. (A)		5c2	2	12′-9	27	5c2	2	11′-9	25	5c2	2	10′-9	22
WINGWALL, B.F.V.		6c3	64 VAR	2 EACH 6′-1:16′-1	1065	5c3	58 VAR	2 EACH 6′-1:15′-1	640	5c3	52 VAR	2 EACH 6′-1:14′-2	549
WINGWALL, B.F.V. (O)		6c4	2	16′-3	49	5c4	2	15′-3	32	5c4	2	14′-3	30
WINGWALL, B.F.V. (A)		6c4	2	16′-3	49	5c4	2	15′-3	32	5c4	2	14′-3	30
WINGWALL, B.F.V.		6c5	42	8′-6	536	5c5	36	8′-6	319	5c5	34	8′-6	301
APRON, LONGIT., BOTT.		4d1	7	35′-0	164	4d1	7	31′-10	149	4d1	7	28′-9	134
APRON, LONGIT., TOP		6f1	9	35′-0	473	6f1	9	31′-10	430	6f1	9	28′-9	389
PARAPET, VERTICAL		4i1	17	6′-7	75	4i1	17	6′-7	75	4i1	17	6′-7	75
PARAPET, HORIZ.		7j1	4	9′-8	79	7j1	4	9′-8	79	7j1	4	9′-8	79
APRON, TRANS., TOP		6m1	32	9′-10	473	6m1	29	9′-10	428	6m1	26	9′-10	384
APRON, TRANS., TOP		6m2	2 VAR	4′-0:7′-9	18	6m2	2 VAR	3′-7:7′-4	16	6m2	2 VAR	3′-2:6′-11	15
APRON, TRANS., BOTT.		5m3	61	6′-11	440	6m3	28	7′-9	326	6m3	25	7′-9	291
CURTAIN, HORIZ.		6p1	6	10′-1	91	6p1	6	10′-1	91	6p1	6	10′-1	91
WING SLOPE, BOTH F.		6s1	4	30′-2	181	6s1	4	26′-11	162	6s1	4	23′-8	142
WING SLOPE, BOTH F. (O)		6s2	2	7′-11	24	6s2	2	7′-11	24	6s2	2	7′-11	24
WING SLOPE, BOTH F. (A)		6s3	2	8′-1	24	6s3	2	8′-1	24	6s3	2	8′-1	24
WING SLOPE, F. F.		6s4	2	11′-3	34	6s4	2	11′-3	34	6s4	2	11′-3	34
WING SLOPE, F. F.		6s5	2	27′-11	84	6s5	2	24′-8	74	6s5	2	21′-5	64
CURTAIN, VERT.		5t1	9	7′-5	70	5t1	9	7′-2	67	5t1	9	6′-11	65
CURTAIN, VERT., ENDS		5t2	4	7′-5	31	5t2	4	7′-2	30	5t2	4	6′-11	29
BRACKET, VERT.		5u1	4	6′-2	26	5u1	4	5′-11	25	5u1	4	5′-8	24
ESTIMATED QUANTITIES ONE HEADWALL	REINF. STEEL	5831 LBS.				4312 LBS.				3709 LBS.			
	CONCRETE	PARAPET Δ	1.3	29.6 CU.YD.		PARAPET Δ	1.3	26.0 CU.YD.		PARAPET Δ	1.3	22.6 CU.YD.	
		WINGWALLS	13.6			WINGWALLS	11.4			WINGWALLS	9.3		
		APRON	14.7			APRON	13.3			APRON	12.0		

LOCATION	8′ x 7′				8′ x 6′				8′ x 5′				8′ x 4′			
	BAR	NO.	LENGTH	WT.	BAR	NO.	LENGTH	WT.	BAR	NO.	LENGTH	WT.	BAR	NO.	LENGTH	WT.
FENCE ANCHOR (GALV.)	5fa	2	2′-10	6	5fa	2	2′-10	6	5fa	2	2′-10	6	5fa	2	2′-10	6
WINGWALL, F.F.H.	5b1	2	25′-8	54	5b1	2	22′-7	47	5b1	2	19′-6	41	5b1	2	16′-5	34
WINGWALL, F.F.H.	5b2	12 VAR	2 EACH 9′-2:24′-8	212	5b2	10 VAR	2 EACH 9′-2:21′-7	160	5b2	8 VAR	2 EACH 9′-2:18′-5	115	5b2	6 VAR	2 EACH 9′-2:15′-4	77
WINGWALL, B.F.H.	4b3	2	25′-9	34	4b3	2	22′-8	30	4b3	2	19′-7	26	4b3	2	16′-6	22
WINGWALL, B.F.H.	4b4	10 VAR	2 EACH 12′-4:24′-9	124	4b4	8 VAR	2 EACH 12′-4:21′-8	91	4b4	6 VAR	2 EACH 12′-4:18′-6	62	4b4	4 VAR	2 EACH 12′-4:15′-5	37
WINGWALL, F.F.V.	5c1	46 VAR	2 EACH 2′-6:9′-7	290	4c1	40 VAR	2 EACH 2′-6:8′-7	148	4c1	34 VAR	2 EACH 2′-6:7′-8	115	4c1	26 VAR	2 EACH 2′-6:6′-4	77
WINGWALL, F.F.V. (O)	5c2	2	9′-9	20	4c2	2	8′-9	12	4c2	2	7′-9	10	4c2	2	6′-9	9
WINGWALL, F.F.V. (A)	5c2	2	9′-9	20	4c2	2	8′-9	12	4c2	2	7′-9	10	4c2	2	6′-9	9
WINGWALL, B.F.V.	5c3	46 VAR	2 EACH 6′-1:13′-2	462	6c3	40 VAR	2 EACH 6′-1:12′-2	548	5c3	34 VAR	2 EACH 6′-1:11′-3	307	5c3	26 VAR	2 EACH 6′-1:9′-11	217
WINGWALL, B.F.V. (O)	5c4	2	13′-3	28	6c4	2	12′-3	37	5c4	2	11′-3	23	5c4	2	10′-3	21
WINGWALL, B.F.V. (A)	5c4	2	13′-3	28	6c4	2	12′-3	37	5c4	2	11′-3	23	5c4	2	10′-3	21
WINGWALL, B.F.V.	5c5	30	8′-6	266	c5	—	—	—	c5	—	—	—	c5	—	—	—
APRON, LONGIT., BOTT.	4d1	7	25′-8	120	4d1	7	22′-6	105	4d1	7	19′-5	91	4d1	7	16′-4	76
APRON, LONGIT., TOP	6f1	9	25′-8	347	6f1	9	22′-6	304	6f1	9	19′-5	262	6f1	9	16′-4	221
PARAPET, VERTICAL	4i1	17	6′-7	75	4i1	17	6′-7	75	4i1	17	6′-7	75	4i1	17	6′-7	75
PARAPET, HORIZ.	7j1	4	9′-6	78	7j1	4	9′-6	78	7j1	4	9′-6	78	7j1	4	9′-6	78
APRON, TRANS., TOP	6m1	23	9′-8	334	6m1	20	9′-8	290	6m1	17	9′-8	247	6m1	14	9′-8	203
APRON, TRANS., TOP	6m2	2 VAR	2′-9:6′-5	14	6m2	2 VAR	2′-4:6′-1	13	6m2	1	5′-8	9	6m2	1	5′-3	8
APRON, TRANS., BOTT.	5m3	22	6′-9	155	4m3	19	5′-11	75	4m3	16	5′-11	63	4m3	13	5′-11	51
CURTAIN, HORIZ.	6p1	5	9′-11	74	6p1	5	9′-11	74	6p1	5	9′-11	74	6p1	5	9′-11	74
WING SLOPE, BOTH F.	6s1	4	20′-5	123	6s1	4	17′-2	103	6s1	4	13′-11	84	6s1	4	10′-7	64
WING SLOPE, BOTH F. (O)	6s2	2	7′-11	24	6s2	2	7′-10	24	6s2	2	7′-10	24	6s2	2	7′-10	24
WING SLOPE, BOTH F. (A)	6s3	2	8′-1	24	6s3	2	8′-0	24	6s3	2	8′-0	24	6s3	2	8′-0	24
WING SLOPE, F. F.	6s4	2	11′-3	34	6s4	2	11′-3	34	6s4	2	11′-3	34	6s4	2	11′-3	34
WING SLOPE, F. F.	6s5	2	18′-1	54	6s5	2	14′-10	45	6s5	2	11′-7	35	6s5	2	8′-4	25
CURTAIN, VERT.	5t1	9	6′-8	63	5t1	9	6′-5	60	5t1	9	6′-5	60	5t1	9	6′-5	60
CURTAIN, VERT., ENDS	5t2	4	6′-8	28	5t2	4	6′-5	27	5t2	4	6′-5	27	5t2	4	6′-5	27
BRACKET, VERT.	5u1	4	5′-6	23	5u1	4	5′-3	22	5u1	4	5′-3	22	5u1	4	5′-3	22
ESTIMATED QUANTITIES ONE HEADWALL	3114 LBS.				2481 LBS.				1947 LBS.				1596 LBS.			
	PARAPET Δ	1.2	18.4 CU.YD.		PARAPET Δ	1.2	15.5 CU.YD.		PARAPET Δ	1.2	13.0 CU.YD.		PARAPET Δ	1.2	10.6 CU.YD.	
	WINGWALLS	6.7			WINGWALLS	5.1			WINGWALLS	3.8			WINGWALLS	2.6		
	APRON	10.5			APRON	9.2			APRON	8.0			APRON	6.8		

Δ INCLUDES TOP OF WINGWALL QUANTITIES.

NOTE: WEIGHT OF BARS OVER 40′-0 LONG INCLUDE AN ALLOWANCE OF 2′-0 FOR LAP.

(A) - INDICATES BAR LOCATED AT ACUTE CORNER.
(O) - INDICATES BAR LOCATED AT OBTUSE CORNER.
REFER TO SHEET PWH 15-1-12 FOR ACUTE AND OBTUSE CORNER LOCATIONS.

BENT BAR DETAILS

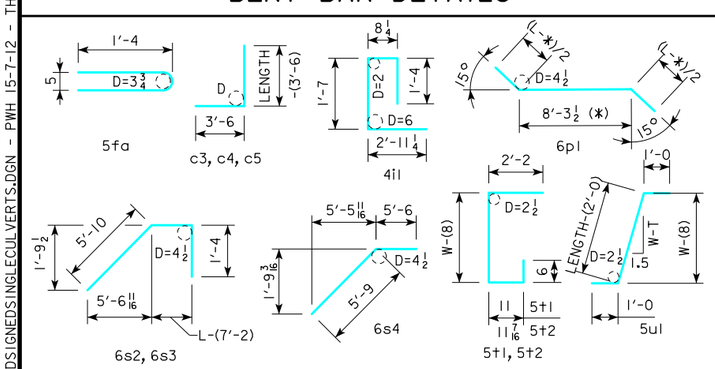

NOTE: ALL DIMENSIONS ARE OUT TO OUT
D = PIN DIAMETER
SEE TABLE AT RIGHT FOR PIN DIAMETER "D" OF c BARS

c BAR PIN DIAMETER	
BAR SIZE	D
4	3
5	3¾
6	4½

HEADWALL NOTES:

THIS HEADWALL IS BASED ON A 3:1 SLOPE NORMAL TO CENTERLINE OF ROADWAY.

THE SIDES OF THE FOOTING ARE TO BE FORMED TO INSURE CORRECT LINE AND GRADE.

ALL EXPOSED CORNERS OF 90° OR SHARPER ARE TO BE FILLETED WITH A ¾" DRESSED AND BEVELED STRIP.

ALL REINFORCING IS TO BE SECURELY WIRED IN PLACE BEFORE THE CONCRETE IS POURED. ALL SLAB AND FLOOR REINFORCING STEEL IS TO BE SUPPORTED BY BAR CHAIRS AT INTERVALS OF NOT MORE THAN 3′-0 IN EITHER DIRECTION AS OUTLINED IN THE STANDARD SPECIFICATIONS.

CLEAR DISTANCE FROM FACE OF CONCRETE TO NEAR REINFORCING BAR IS TO BE 2" UNLESS OTHERWISE NOTED OR SHOWN. CLEARANCE TO THE BOTTOM ENDS OF VERTICAL BARS SHALL BE 3 INCHES.

CONCRETE QUANTITIES ARE ESTIMATED FROM BACK OF PARAPET.

HORIZONTAL TAILS OF BARS "b" & "s" ESTIMATED TO EXTEND 2′-0 BEYOND BACK OF PARAPET (INTO END OF BARREL). LONGITUDINAL BARS "4d1" AND "6f1" ESTIMATED TO PROJECT INTO END SECTION OF BARREL A MINIMUM OF 2′-0 BEYOND BACK OF PARAPET. THE "LENGTH" COLUMN REFLECTS TOTAL NUMBER OF FEET NECESSARY TO MEET THESE REQUIREMENTS.

07-2016
LATEST REVISION DATE

APPROVED BY BRIDGE ENGINEER

IOWA DOT Highway Division

STANDARD DESIGN - SINGLE REINFORCED CONCRETE BOX CULVERTS

PARALLEL WING HEADWALLS

APRIL, 2012

QUANTITY TABULATION
8′-0 SPAN
15° SKEW

PWH 15-7-12

REVISED 07-2016 - CHANGED FENCE ANCHOR BAR (5fa) FROM 3′-1 TO 2′-10.
ENGLISHLRFDSIGNEDSINGLECULVERTS.DGN - PWH 15-7-12 - THIS SHEET ISSUED 04-12.

BILL OF REINFORCING FOR ONE HEADWALL 15° SKEW CULVERT SPAN x CULVERT HEIGHT

LOCATION	SHAPE	6′ x 8′				6′ x 7′				6′ x 6′				6′ x 5′				6′ x 4′				6′ x 3′			
		BAR	NO.	LENGTH	WT.	BAR	NO.	LENGTH	WT.	BAR	NO.	LENGTH	WT.	BAR	NO.	LENGTH	WT.	BAR	NO.	LENGTH	WT.	BAR	NO.	LENGTH	WT.
FENCE ANCHOR (GALV.)		5fa	2	2′-10	6	5fa	2	2′-10	6	5fa	2	2′-10	6	5fa	2	2′-10	6	5fa	2	2′-10	6	5fa	2	2′-10	6
WINGWALL, F.F.H.		5b1	2	28′-10	60	5b1	2	25′-8	54	5b1	2	22′-7	47	5b1	2	19′-6	41	5b1	2	16′-5	34	5b1	2	13′-3	28
WINGWALL, F.F.H.		5b2	14 VAR	2 EACH 9′-2:27′-9	270	5b2	12 VAR	2 EACH 9′-2:24′-8	212	5b2	10 VAR	2 EACH 9′-2:21′-7	160	5b2	8 VAR	2 EACH 9′-2:18′-5	115	5b2	6 VAR	2 EACH 9′-2:15′-4	77	5b2	4 VAR	2 EACH 9′-2:12′-3	45
WINGWALL, B.F.H.		4b3	2	28′-11	39	4b3	2	25′-9	34	4b3	2	22′-8	30	4b3	2	19′-7	26	4b3	2	16′-6	22	4b3	2	13′-4	18
WINGWALL, B.F.H.		4b4	12 VAR	2 EACH 12′-4:27′-11	161	4b4	10 VAR	2 EACH 12′-4:24′-9	124	4b4	8 VAR	2 EACH 12′-4:21′-8	91	4b4	6 VAR	2 EACH 12′-4:18′-6	62	4b4	4 VAR	2 EACH 12′-4:15′-5	37	4b4	2	12′-4	16
WINGWALL, F.F.V.		5c1	68 VAR	2 EACH 2′-6:10′-6	461	5c1	46 VAR	2 EACH 2′-6:9′-7	290	4c1	40 VAR	2 EACH 2′-6:8′-7	148	4c1	34 VAR	2 EACH 2′-6:7′-8	115	4c1	26 VAR	2 EACH 2′-6:6′-4	77	4c1	20 VAR	2 EACH 2′-6:5′-5	53
WINGWALL, F.F.V. (O)		5c2	2	10′-9	22	5c2	2	9′-9	20	4c2	2	8′-9	12	4c2	2	7′-9	10	4c2	2	6′-9	9	4c2	2	5′-9	8
WINGWALL, F.F.V. (A)		5c2	2	10′-9	22	5c2	2	9′-9	20	4c2	2	8′-9	12	4c2	2	7′-9	10	4c2	2	6′-9	9	4c2	2	5′-9	8
WINGWALL, B.F.V.		5c3	52 VAR	2 EACH 6′-1:14′-2	549	5c3	46 VAR	2 EACH 6′-1:13′-2	462	6c3	40 VAR	2 EACH 6′-1:12′-2	548	5c3	34 VAR	2 EACH 6′-1:11′-3	307	4c3	26 VAR	2 EACH 6′-1:9′-11	139	4c3	20 VAR	2 EACH 6′-1:9′-0	101
WINGWALL, B.F.V. (O)		5c4	2	14′-3	30	5c4	2	13′-3	28	6c4	2	12′-3	37	5c4	2	11′-3	23	4c4	2	10′-3	14	4c4	2	9′-3	12
WINGWALL, B.F.V. (A)		5c4	2	14′-3	30	5c4	2	13′-3	28	6c4	2	12′-3	37	5c4	2	11′-3	23	4c4	2	10′-3	14	4c4	2	9′-3	12
WINGWALL, B.F.V.		5c5	34	8′-6	301	5c5	30	8′-6	266	c5	—	—	—	c5	—	—	—	c5	—	—	—	c5	—	—	—
APRON, LONGIT., BOTT.		4d1	6	28′-9	115	4d1	6	25′-8	103	4d1	6	22′-6	90	4d1	6	19′-5	78	4d1	6	16′-4	65	4d1	6	13′-3	53
APRON, LONGIT., TOP		6f1	7	28′-9	302	6f1	7	25′-8	270	6f1	7	22′-6	237	6f1	7	19′-5	204	6f1	7	16′-4	172	6f1	7	13′-3	139
PARAPET, VERTICAL		4i1	13	6′-7	57	4i1	13	6′-7	57	4i1	13	6′-7	57	4i1	13	6′-7	57	4i1	13	6′-7	57	4i1	13	6′-7	57
PARAPET, HORIZ.		7j1	4	7′-7	62	7j1	4	7′-5	61	7j1	4	7′-5	61	7j1	4	7′-5	61	7j1	4	7′-5	61	7j1	4	7′-5	61
APRON, TRANS., TOP		6m1	26	7′-10	306	6m1	23	7′-8	265	6m1	20	7′-8	230	6m1	17	7′-8	196	6m1	14	7′-8	161	6m1	11	7′-8	127
APRON, TRANS., TOP		6m2	2 VAR	2′-2:5′-11	12	6m2	1	5′-5	8	6m2	1	5′-1	8	6m2	1	4′-8	7	6m2	1	4′-3	6	6m2	1	3′-10	6
APRON, TRANS., BOTT.		6m3	25	5′-8	213	5m3	22	4′-8	107	4m3	19	3′-10	49	4m3	16	3′-10	41	4m3	13	3′-10	33	4m3	10	3′-10	26
CURTAIN, HORIZ.		6p1	6	8′-1	73	6p1	5	7′-11	59	6p1	5	7′-11	59	6p1	5	7′-11	59	6p1	5	7′-11	59	6p1	5	7′-11	59
WING SLOPE, BOTH F.		6s1	4	23′-8	142	6s1	4	20′-5	123	6s1	4	17′-2	103	6s1	4	13′-11	84	6s1	4	10′-7	64	6s1	4	7′-4	44
WING SLOPE, BOTH F. (O)		6s2	2	7′-11	24	6s2	2	7′-11	24	6s2	2	7′-10	24	6s2	2	7′-10	24	6s2	2	7′-10	24	6s2	2	7′-10	24
WING SLOPE, BOTH F. (A)		6s3	2	8′-1	24	6s3	2	8′-1	24	6s3	2	8′-0	24	6s3	2	8′-0	24	6s3	2	8′-0	24	6s3	2	8′-0	24
WING SLOPE, F. F.		6s4	2	11′-3	34	6s4	2	11′-3	34	6s4	2	11′-3	34	6s4	2	11′-3	34	6s4	2	11′-3	34	6s4	2	11′-3	34
WING SLOPE, F. F.		6s5	2	21′-5	64	6s5	2	18′-1	54	6s5	2	14′-10	45	6s5	2	11′-7	35	6s5	2	8′-4	25	6s5	2	5′-1	15
CURTAIN, VERT.		5t1	7	6′-11	50	5t1	7	6′-8	49	5t1	7	6′-5	47	5t1	7	6′-5	47	5t1	7	6′-5	47	5t1	7	6′-5	47
CURTAIN, VERT., ENDS		5t2	4	6′-11	29	5t2	4	6′-8	28	5t2	4	6′-5	27	5t2	4	6′-5	27	5t2	4	6′-5	27	5t2	4	6′-5	27
BRACKET, VERT.		5u1	4	5′-8	24	5u1	4	5′-6	23	5u1	4	5′-3	22	5u1	4	5′-3	22	5u1	4	5′-3	22	5u1	4	5′-3	22

ESTIMATED QUANTITIES ONE HEADWALL		6′ x 8′			6′ x 7′			6′ x 6′			6′ x 5′			6′ x 4′			6′ x 3′		
REINF. STEEL		3482 LBS.			2833 LBS.			2245 LBS.			1738 LBS.			1319 LBS.			1072 LBS.		
CONCRETE	PARAPET Δ	1.1	20.3 CU.YD.	PARAPET Δ	1.1	16.4 CU.YD.	PARAPET Δ	1.1	13.7 CU.YD.	PARAPET Δ	1.1	11.5 CU.YD.	PARAPET Δ	1.1	9.3 CU.YD.	PARAPET Δ	1.1	7.3 CU.YD.
	WINGWALLS	9.3		WINGWALLS	6.7		WINGWALLS	5.1		WINGWALLS	3.8		WINGWALLS	2.6		WINGWALLS	1.6	
	APRON	9.9		APRON	8.6		APRON	7.5		APRON	6.6		APRON	5.6		APRON	4.6	

Δ INCLUDES TOP OF WINGWALL QUANTITIES.

NOTE: WEIGHT OF BARS OVER 40′-0 LONG INCLUDE AN ALLOWANCE OF 2′-0 FOR LAP.

(A) - INDICATES BAR LOCATED AT ACUTE CORNER.
(O) - INDICATES BAR LOCATED AT OBTUSE CORNER.
REFER TO SHEET PWH 15-1-12 FOR ACUTE AND OBTUSE CORNER LOCATIONS.

BENT BAR DETAILS

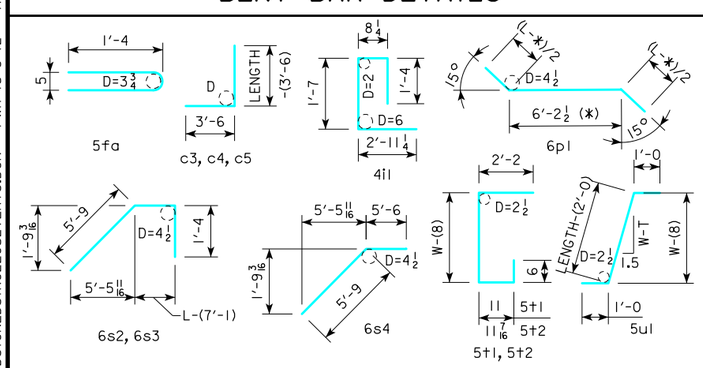

NOTE: ALL DIMENSIONS ARE OUT TO OUT
D = PIN DIAMETER
SEE TABLE AT RIGHT FOR PIN DIAMETER "D" OF c BARS

c BAR PIN DIAMETER	
BAR SIZE	D
4	3
5	3¾
6	4½

HEADWALL NOTES:

THIS HEADWALL IS BASED ON A 3:1 SLOPE NORMAL TO CENTERLINE OF ROADWAY.

THE SIDES OF THE FOOTING ARE TO BE FORMED TO INSURE CORRECT LINE AND GRADE.

ALL EXPOSED CORNERS OF 90° OR SHARPER ARE TO BE FILLETED WITH A ¾" DRESSED AND BEVELED STRIP.

ALL REINFORCING IS TO BE SECURELY WIRED IN PLACE BEFORE THE CONCRETE IS POURED. ALL SLAB AND FLOOR REINFORCING STEEL IS TO BE SUPPORTED BY BAR CHAIRS AT INTERVALS OF NOT MORE THAN 3′-0 IN EITHER DIRECTION AS OUTLINED IN THE STANDARD SPECIFICATIONS.

CLEAR DISTANCE FROM FACE OF CONCRETE TO NEAR REINFORCING BAR IS TO BE 2" UNLESS OTHERWISE NOTED OR SHOWN. CLEARANCE TO THE BOTTOM ENDS OF VERTICAL BARS SHALL BE 3 INCHES.

CONCRETE QUANTITIES ARE ESTIMATED FROM BACK OF PARAPET.

HORIZONTAL TAILS OF BARS "b" & "s" ESTIMATED TO EXTEND 2′-0 BEYOND BACK OF PARAPET (INTO END OF BARREL). LONGITUDINAL BARS "4d1" AND "6f1" ESTIMATED TO PROJECT INTO END SECTION OF BARREL A MINIMUM OF 2′-0 BEYOND BACK OF PARAPET. THE "LENGTH" COLUMN REFLECTS TOTAL NUMBER OF FEET NECESSARY TO MEET THESE REQUIREMENTS.

07-2016
LATEST REVISION DATE

APPROVED BY BRIDGE ENGINEER

IOWA DOT Highway Division

STANDARD DESIGN - SINGLE REINFORCED CONCRETE BOX CULVERTS

PARALLEL WING HEADWALLS

APRIL, 2012

QUANTITY TABULATION
6′-0 SPAN
15° SKEW

PWH 15-8-12

REVISED 07-2016 - CHANGED FENCE ANCHOR BAR (5fa) FROM 3′-1 TO 2′-10.
ENGLISHLRFDSIGNEDSINGLECULVERTS.DGN - PWH 15-8-12 - THIS SHEET ISSUED 04-12.

BILL OF REINFORCING FOR ONE HEADWALL
15° SKEW CULVERT SPAN x CULVERT HEIGHT

LOCATION	SHAPE	5′ x 6′				5′ x 5′				5′ x 4′				5′ x 3′			
		BAR	NO.	LENGTH	WT.	BAR	NO.	LENGTH	WT.	BAR	NO.	LENGTH	WT.	BAR	NO.	LENGTH	WT.
FENCE ANCHOR (GALV.)		5fa	2	2′-10	6	5fa	2	2′-10	6	5fa	2	2′-10	6	5fa	2	2′-10	6
WINGWALL, F.F.H.		5b1	2	22′-7	47	5b1	2	19′-6	41	5b1	2	16′-5	34	5b1	2	13′-3	28
WINGWALL, F.F.H.		5b2	10 VAR	2 EACH 9′-2:21′-7	160	5b2	8 VAR	2 EACH 9′-2:18′-5	115	5b2	6 VAR	2 EACH 9′-2:15′-4	77	5b2	4 VAR	2 EACH 9′-2:12′-3	45
WINGWALL, B.F.H.		4b3	2	22′-8	30	4b3	2	19′-7	26	4b3	2	16′-6	22	4b3	2	13′-4	18
WINGWALL, B.F.H.		4b4	8 VAR	2 EACH 12′-4:21′-8	91	4b4	6 VAR	2 EACH 12′-4:18′-6	62	4b4	4 VAR	2 EACH 12′-4:15′-5	37	4b4	2	12′-4	16
WINGWALL, F.F.V.		4c1	40 VAR	2 EACH 2′-6:8′-7	148	4c1	34 VAR	2 EACH 2′-6:7′-8	115	4c1	26 VAR	2 EACH 2′-6:6′-4	77	4c1	20 VAR	2 EACH 2′-6:5′-5	53
WINGWALL, F.F.V. (O)		4c2	2	8′-9	12	4c2	2	7′-9	10	4c2	2	6′-9	9	4c2	2	5′-9	8
WINGWALL, F.F.V. (A)		4c2	2	8′-9	12	4c2	2	7′-9	10	4c2	2	6′-9	9	4c2	2	5′-9	8
WINGWALL, B.F.V.		6c3	40 VAR	2 EACH 6′-1:12′-2	548	5c3	34 VAR	2 EACH 6′-1:11′-3	307	4c3	26 VAR	2 EACH 6′-1:9′-11	139	4c3	20 VAR	2 EACH 6′-1:9′-0	101
WINGWALL, B.F.V. (O)		6c4	2	12′-3	37	5c4	2	11′-3	23	4c4	2	10′-3	14	4c4	2	9′-3	12
WINGWALL, B.F.V. (A)		6c4	2	12′-3	37	5c4	2	11′-3	23	4c4	2	10′-3	14	4c4	2	9′-3	12
WINGWALL, B.F.V.		c5	—	—	—	c5	—	—	—	c5	—	—	—	c5	—	—	—
APRON, LONGIT., BOTT.		4d1	5	22′-6	75	4d1	5	19′-5	65	4d1	5	16′-4	55	4d1	5	13′-3	44
APRON, LONGIT., TOP		6f1	6	22′-6	203	6f1	6	19′-5	175	6f1	6	16′-4	147	6f1	6	13′-3	119
PARAPET, VERTICAL		4i1	11	6′-7	48	4i1	11	6′-7	48	4i1	11	6′-7	48	4i1	11	6′-7	48
PARAPET, HORIZ.		7j1	4	6′-5	52	7j1	4	6′-5	52	7j1	4	6′-5	52	7j1	4	6′-5	52
APRON, TRANS., TOP		6m1	20	6′-8	200	6m1	17	6′-8	170	6m1	14	6′-8	140	6m1	11	6′-8	110
APRON, TRANS., TOP		6m2	1	4′-7	7	6m2	1	4′-2	6	6m2	1	3′-9	6	6m2	1	3′-4	5
APRON, TRANS., BOTT.		4m3	19	2′-9	35	4m3	16	2′-9	29	4m3	13	2′-9	24	4m3	10	2′-9	18
CURTAIN, HORIZ.		6p1	5	6′-10	51	6p1	5	6′-10	51	6p1	5	6′-10	51	6p1	5	6′-10	51
WING SLOPE, BOTH F.		6s1	4	17′-2	103	6s1	4	13′-11	84	6s1	4	10′-7	64	6s1	4	7′-4	44
WING SLOPE, BOTH F. (O)		6s2	2	7′-10	24	6s2	2	7′-10	24	6s2	2	7′-10	24	6s2	2	7′-10	24
WING SLOPE, BOTH F. (A)		6s3	2	8′-0	24	6s3	2	8′-0	24	6s3	2	8′-0	24	6s3	2	8′-0	24
WING SLOPE, F. F.		6s4	2	11′-3	34	6s4	2	11′-3	34	6s4	2	11′-3	34	6s4	2	11′-3	34
WING SLOPE, F. F.		6s5	2	14′-10	45	6s5	2	11′-7	35	6s5	2	8′-4	25	6s5	2	5′-1	15
CURTAIN, VERT.		5t1	6	6′-5	40	5t1	6	6′-5	40	5t1	6	6′-5	40	5t1	6	6′-5	40
CURTAIN, VERT., ENDS		5t2	4	6′-5	27	5t2	4	6′-5	27	5t2	4	6′-5	27	5t2	4	6′-5	27
BRACKET, VERT.		5u1	4	5′-3	22	5u1	4	5′-3	22	5u1	4	5′-3	22	5u1	4	5′-3	22

ESTIMATED QUANTITIES ONE HEADWALL		5′ x 6′			5′ x 5′			5′ x 4′			5′ x 3′		
REINF. STEEL		2118 LBS.			1624 LBS.			1221 LBS.			984 LBS.		
CONCRETE	PARAPET Δ	1.0	12.8 CU.YD.		1.0	10.6 CU.YD.		1.0	8.6 CU.YD.		1.0	6.7 CU.YD.	
	WINGWALLS	5.1			3.8			2.6			1.6		
	APRON	6.7			5.8			5.0			4.1		

Δ INCLUDES TOP OF WINGWALL QUANTITIES.

NOTE: WEIGHT OF BARS OVER 40′-0 LONG INCLUDE AN ALLOWANCE OF 2′-0 FOR LAP.

(A) - INDICATES BAR LOCATED AT ACUTE CORNER.
(O) - INDICATES BAR LOCATED AT OBTUSE CORNER.
REFER TO SHEET PWH 15-1-12 FOR ACUTE AND OBTUSE CORNER LOCATIONS.

c BAR PIN DIAMETER	
BAR SIZE	D
4	3
5	3¾
6	4½

BENT BAR DETAILS

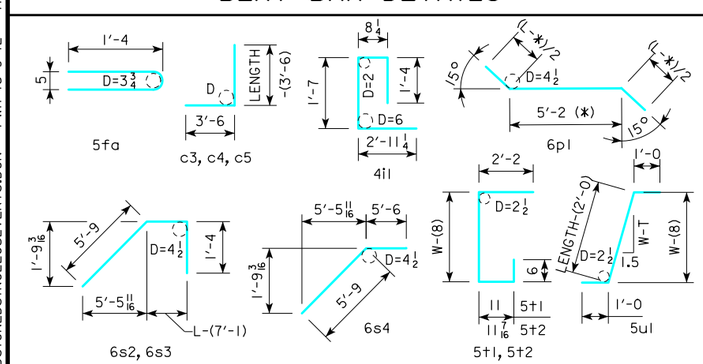

NOTE: ALL DIMENSIONS ARE OUT TO OUT
D = PIN DIAMETER
SEE TABLE AT RIGHT FOR PIN DIAMETER "D" OF c BARS

HEADWALL NOTES:

THIS HEADWALL IS BASED ON A 3:1 SLOPE NORMAL TO CENTERLINE OF ROADWAY.

THE SIDES OF THE FOOTING ARE TO BE FORMED TO INSURE CORRECT LINE AND GRADE.

ALL EXPOSED CORNERS OF 90° OR SHARPER ARE TO BE FILLETED WITH A ¾" DRESSED AND BEVELED STRIP.

ALL REINFORCING IS TO BE SECURELY WIRED IN PLACE BEFORE THE CONCRETE IS POURED. ALL SLAB AND FLOOR REINFORCING STEEL IS TO BE SUPPORTED BY BAR CHAIRS AT INTERVALS OF NOT MORE THAN 3′-0 IN EITHER DIRECTION AS OUTLINED IN THE STANDARD SPECIFICATIONS.

CLEAR DISTANCE FROM FACE OF CONCRETE TO NEAR REINFORCING BAR IS TO BE 2" UNLESS OTHERWISE NOTED OR SHOWN. CLEARANCE TO THE BOTTOM ENDS OF VERTICAL BARS SHALL BE 3 INCHES.

CONCRETE QUANTITIES ARE ESTIMATED FROM BACK OF PARAPET.

HORIZONTAL TAILS OF BARS "b" & "s" ESTIMATED TO EXTEND 2′-0 BEYOND BACK OF PARAPET (INTO END OF BARREL). LONGITUDINAL BARS "4d1" AND "6f1" ESTIMATED TO PROJECT INTO END SECTION OF BARREL A MINIMUM OF 2′-0 BEYOND BACK OF PARAPET. THE "LENGTH" COLUMN REFLECTS TOTAL NUMBER OF FEET NECESSARY TO MEET THESE REQUIREMENTS.

07-2016
LATEST REVISION DATE

APPROVED BY BRIDGE ENGINEER

IOWADOT Highway Division

STANDARD DESIGN - SINGLE REINFORCED CONCRETE BOX CULVERTS

PARALLEL WING HEADWALLS

APRIL, 2012

QUANTITY TABULATION
5′-0 SPAN
15° SKEW

PWH 15-9-12

REVISED 07-2016 - CHANGED FENCE ANCHOR BAR (5fa) FROM 3′-1 TO 2′-10.
ENGLISHLRFDSIGNEDSINGLECULVERTS.DGN - PWH 15-9-12 - THIS SHEET ISSUED 04-12.

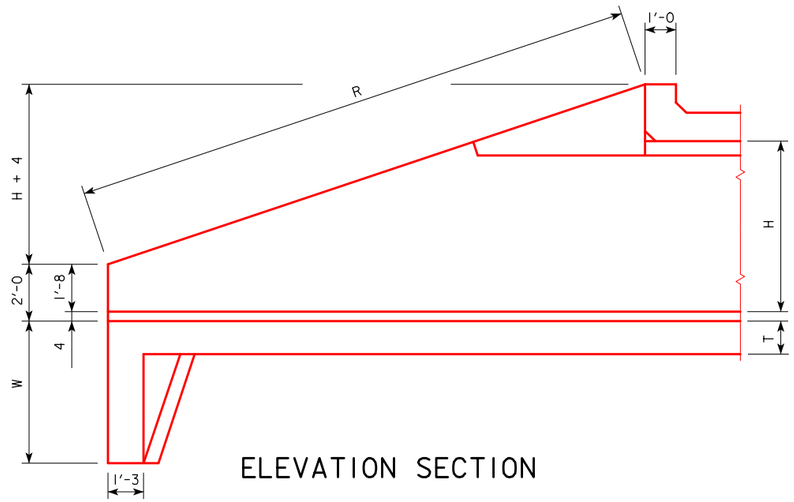

ELEVATION SECTION

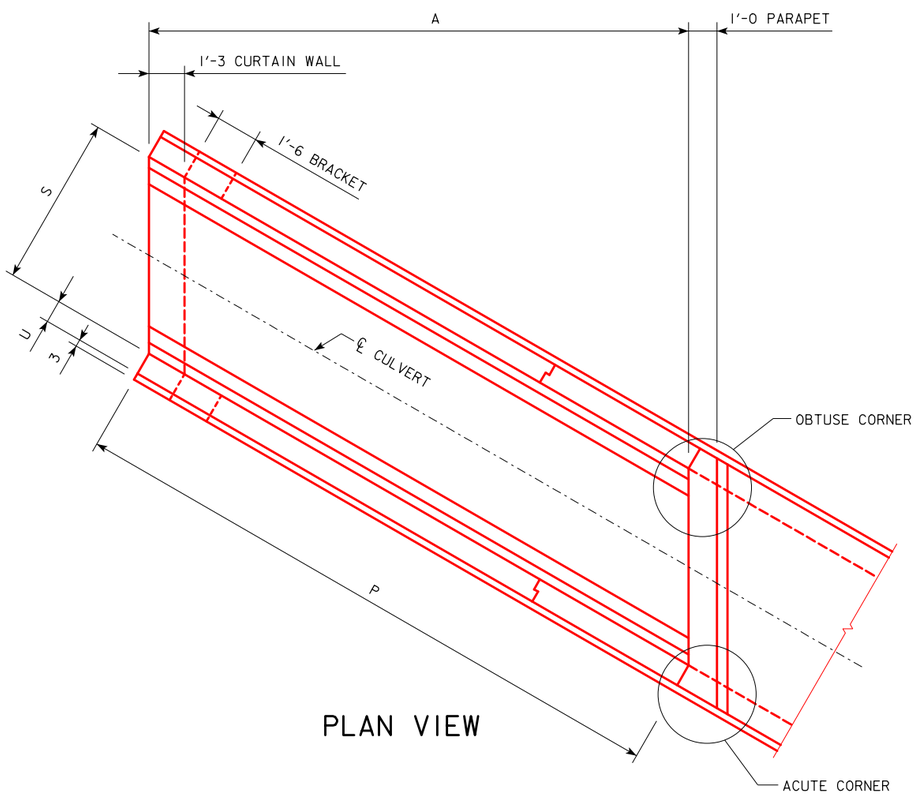

PLAN VIEW

DIMENSION TABLE

	S x H	12' x 12'	12' x 11'	12' x 10'	12' x 9'	12' x 8'	12' x 7'	12' x 6'	12' x 5'	12' x 4'	10' x 12'	10' x 11'	10' x 10'	10' x 9'	10' x 8'	10' x 7'	10' x 6'	10' x 5'	10' x 4'	S x H
HEADWALL DIMENSIONS	A	37'-0	34'-0	31'-0	28'-0	25'-0	22'-0	19'-0	16'-0	13'-0	37'-0	34'-0	31'-0	28'-0	25'-0	22'-0	19'-0	16'-0	13'-0	A
	H	12'-0	11'-0	10'-0	9'-0	8'-0	7'-0	6'-0	5'-0	4'-0	12'-0	11'-0	10'-0	9'-0	8'-0	7'-0	6'-0	5'-0	4'-0	H
	P	42'-8 11/16	39'-3 1/8	35'-9 9/16	32'-4	28'-10 7/16	25'-4 7/8	21'-11 5/16	18'-5 3/4	15'-0 3/16	42'-8 11/16	39'-3 1/8	35'-9 9/16	32'-4	28'-10 7/16	25'-4 7/8	21'-11 5/16	18'-5 3/4	15'-0 3/16	P
	R	44'-5 5/8	40'-10 3/8	37'-3 1/8	33'-7 7/8	30'-0 9/16	26'-5 5/16	22'-10 1/16	19'-2 13/16	15'-7 1/2	44'-5 5/8	40'-10 3/8	37'-3 1/8	33'-7 7/8	30'-0 9/16	26'-5 5/16	22'-10 1/16	19'-2 13/16	15'-7 1/2	R
	S	12'-0	12'-0	12'-0	12'-0	12'-0	12'-0	12'-0	12'-0	12'-0	10'-0	10'-0	10'-0	10'-0	10'-0	10'-0	10'-0	10'-0	10'-0	S
	T	1'-2	1'-2	1'-2	1'-2	1'-2	1'-2	1'-2	1'-2	1'-2	1'-1	1'-1	1'-1	1'-1	1'-1	1'-1	1'-1	1'-1	1'-1	T
	U	1'-0	1'-0	10	10	10	9	9	9	9	1'-0	1'-0	10	10	10	9	9	9	9	U
	W	5'-0	4'-9	4'-6	4'-3	4'-0	3'-9	3'-6	3'-6	3'-6	5'-0	4'-9	4'-6	4'-3	4'-0	3'-9	3'-6	3'-6	3'-6	W
BAR SPACINGS	M	16'-0	15'-0	13'-0	12'-0	11'-0	9'-0	8'-0	6'-0	5'-0	16'-0	15'-0	13'-0	12'-0	11'-0	9'-0	8'-0	-	-	M
	B	1'-0	1'-0	1'-0	1'-0	1'-0	1'-0	1'-0	1'-0	1'-0	1'-0	1'-0	1'-0	1'-0	1'-0	1'-0	1'-0	1'-0	1'-0	B
	C	6	6	9	9	1'-0	1'-0	1'-0	1'-0	1'-0	6	6	9	9	1'-0	1'-0	1'-0	1'-0	1'-0	C
	D	6	6	1'-0	1'-0	1'-0	1'-0	1'-0	1'-0	1'-0	6	6	6	1'-0	1'-0	1'-0	1'-0	1'-0	1'-0	D
	E	9	9	9	9	9	9	9	9	9	9	9	9	9	9	9	9	9	9	E

DIMENSION TABLE

	S x H	8' x 10'	8' x 9'	8' x 8'	8' x 7'	8' x 6'	8' x 5'	8' x 4'	6' x 8'	6' x 7'	6' x 6'	6' x 5'	6' x 4'	6' x 3'	5' x 6'	5' x 5'	5' x 4'	5' x 3'	-	S x H
HEADWALL DIMENSIONS	A	31'-0	28'-0	25'-0	22'-0	19'-0	16'-0	13'-0	25'-0	22'-0	19'-0	16'-0	13'-0	10'-0	19'-0	16'-0	13'-0	10'-0	-	A
	H	10'-0	9'-0	8'-0	7'-0	6'-0	5'-0	4'-0	8'-0	7'-0	6'-0	5'-0	4'-0	3'-0	6'-0	5'-0	4'-0	3'-0	-	H
	P	35'-9 9/16	32'-4	28'-10 7/16	25'-4 7/8	21'-11 5/16	18'-5 3/4	15'-0 3/16	28'-10 7/16	25'-4 7/8	21'-11 5/16	18'-5 3/4	15'-0 3/16	11'-6 5/8	21'-11 5/16	18'-5 3/4	15'-0 3/16	11'-6 5/8	-	P
	R	37'-3 1/8	33'-7 7/8	30'-0 9/16	26'-5 5/16	22'-10 1/16	19'-2 13/16	15'-7 1/2	30'-0 9/16	26'-5 5/16	22'-10 1/16	19'-2 13/16	15'-7 1/2	12'-0 1/4	22'-10 1/16	19'-2 13/16	15'-7 1/2	12'-0 1/4	-	R
	S	8'-0	8'-0	8'-0	8'-0	8'-0	8'-0	8'-0	6'-0	6'-0	6'-0	6'-0	6'-0	6'-0	5'-0	5'-0	5'-0	5'-0	-	S
	T	11	11	11	11	11	11	11	11	11	11	11	11	11	11	11	11	11	-	T
	U	10	10	10	9	9	9	9	10	9	9	9	9	9	9	9	9	9	-	U
	W	4'-6	4'-3	4'-0	3'-9	3'-6	3'-6	3'-6	4'-0	3'-9	3'-6	3'-6	3'-6	3'-6	3'-6	3'-6	3'-6	3'-6	-	W
BAR SPACINGS	M	13'-0	12'-0	11'-0	9'-0	-	-	-	11'-0	9'-0	-	-	-	-	-	-	-	-	-	M
	B	1'-0	1'-0	1'-0	1'-0	1'-0	1'-0	1'-0	1'-0	1'-0	1'-0	1'-0	1'-0	1'-0	1'-0	1'-0	1'-0	1'-0	-	B
	C	6	1'-0	1'-0	1'-0	1'-0	1'-0	1'-0	1'-0	1'-0	1'-0	1'-0	1'-0	1'-0	1'-0	1'-0	1'-0	1'-0	-	C
	D	6	1'-0	1'-0	1'-0	1'-0	1'-0	1'-0	1'-0	1'-0	1'-0	1'-0	1'-0	1'-0	1'-0	1'-0	1'-0	1'-0	-	D
	E	1'-0	1'-0	1'-0	1'-0	1'-0	1'-0	1'-0	1'-0	1'-0	1'-0	1'-0	1'-0	1'-0	1'-0	1'-0	1'-0	1'-0	-	E

NOTES:

1. SEE DRAWING RCB-G1-12 AND RCB-G2-12 FOR GENERAL NOTES, SPECIFICATIONS, AND DESIGN STRESSES.
2. SEE DRAWING PWH 30-2-12 THRU 30-4-12 FOR LOCATION OF CERTAIN DIMENSIONS TABULATED.
3. SEE DRAWING PWH 30-5-12 THRU PWH 30-9-12 FOR HEADWALL NOTES.

LATEST REVISION DATE

APPROVED BY BRIDGE ENGINEER

IOWA DOT Highway Division

STANDARD DESIGN - SINGLE REINFORCED CONCRETE BOX CULVERTS

PARALLEL WING HEADWALLS

APRIL, 2012

DIMENSION TABLE
30° SKEW

PWH 30-1-12

ENGLISHLRFDSIGNEDSINGLECULVERTS.DGN - PWH 30-1-12 - THIS SHEET ISSUED 04-12.

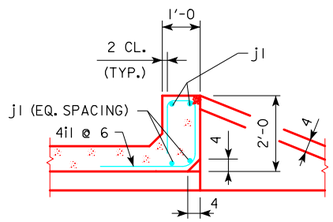

SECTION THRU PARAPET

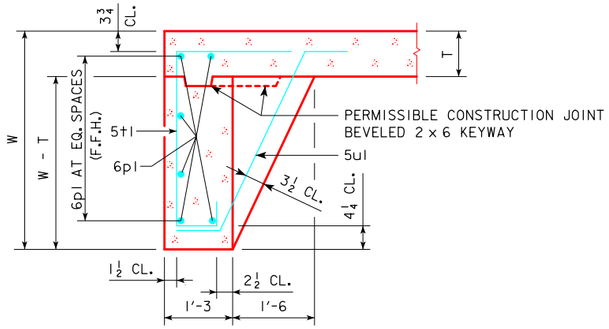

SECTION THRU CURTAIN WALL

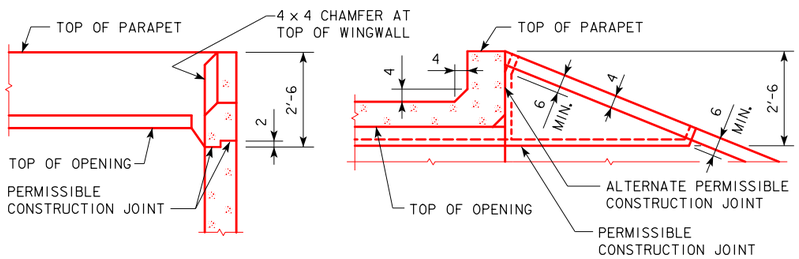

TOP OF WINGWALL DETAILS

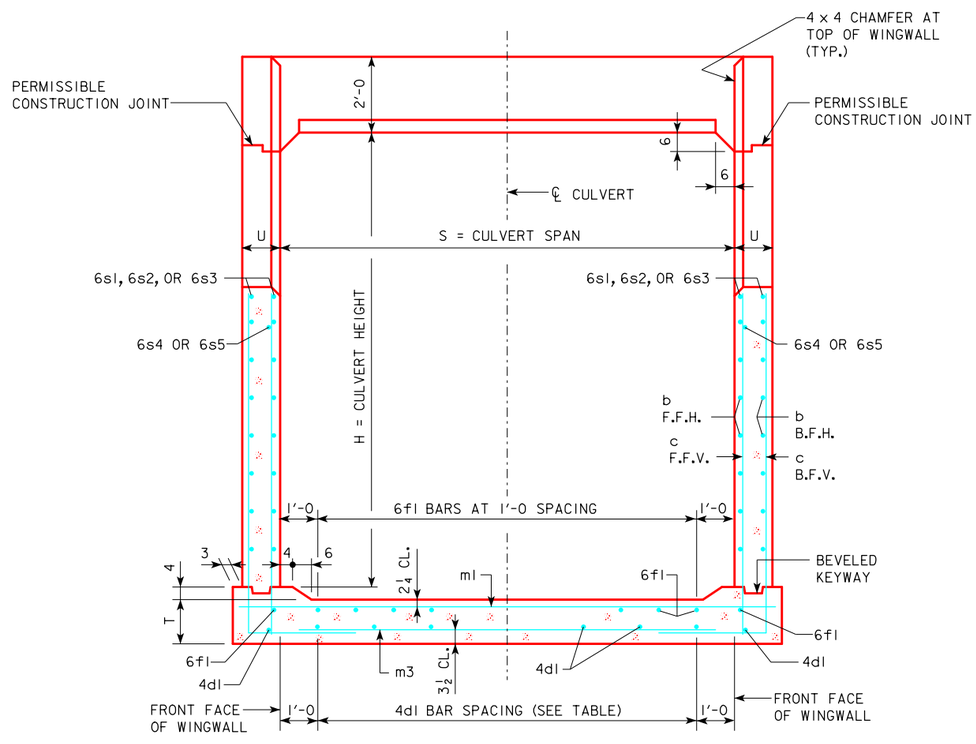

TYPICAL CROSS SECTION - THRU HEADWALL

4d1 BAR SPACING		
SPAN	SPACING	NO. OF BARS
5'-0	2 SPA. AT 1'-6	5
6'-0	3 SPA. AT 1'-4	6
8'-0	4 SPA. AT 1'-6	7
10'-0	6 SPA. AT 1'-4	9
12'-0	8 SPA. AT 1'-3	11

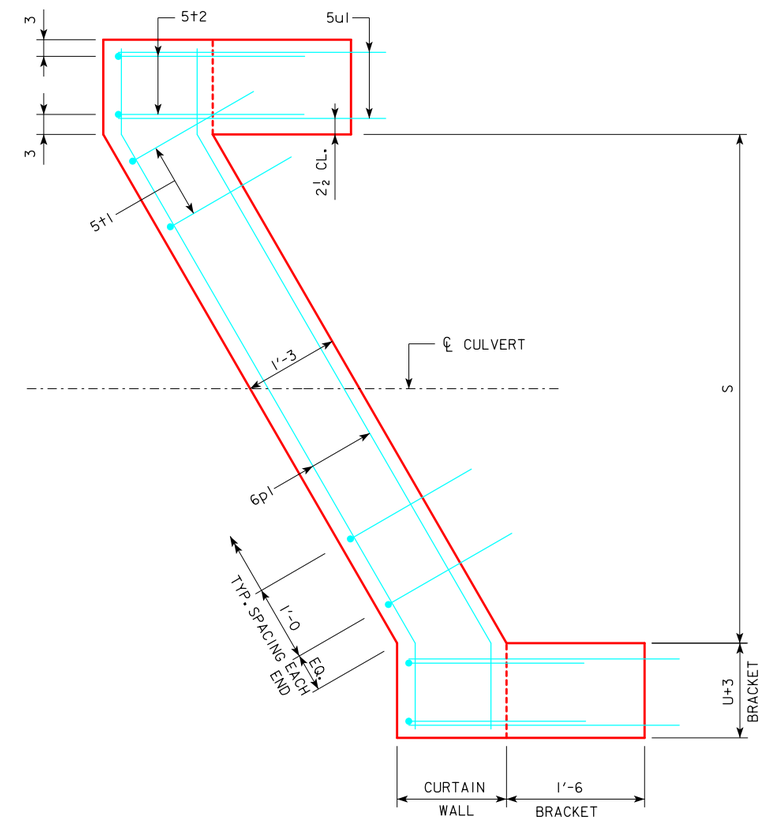

CURTAIN WALL DETAIL - PLAN VIEW

APRON IS NOT SHOWN

NOTES:

1. SEE DRAWING RCB-G1-12 AND RCB-G2-12 FOR GENERAL NOTES, SPECIFICATIONS, AND DESIGN STRESSES.
2. FOR DIMENSION TABLE SEE DRAWING PWH 30-1-12.

LATEST REVISION DATE

APPROVED BY BRIDGE ENGINEER

IOWA DOT Highway Division

STANDARD DESIGN - SINGLE REINFORCED CONCRETE BOX CULVERTS

PARALLEL WING HEADWALLS

APRIL, 2012

CROSS SECTION DETAILS 30° SKEW

PWH 30-2-12

ENGLISHLRFDSIGNEDSINGLECULVERTS.DGN - PWH 30-2-12 - THIS SHEET ISSUED 04-12.

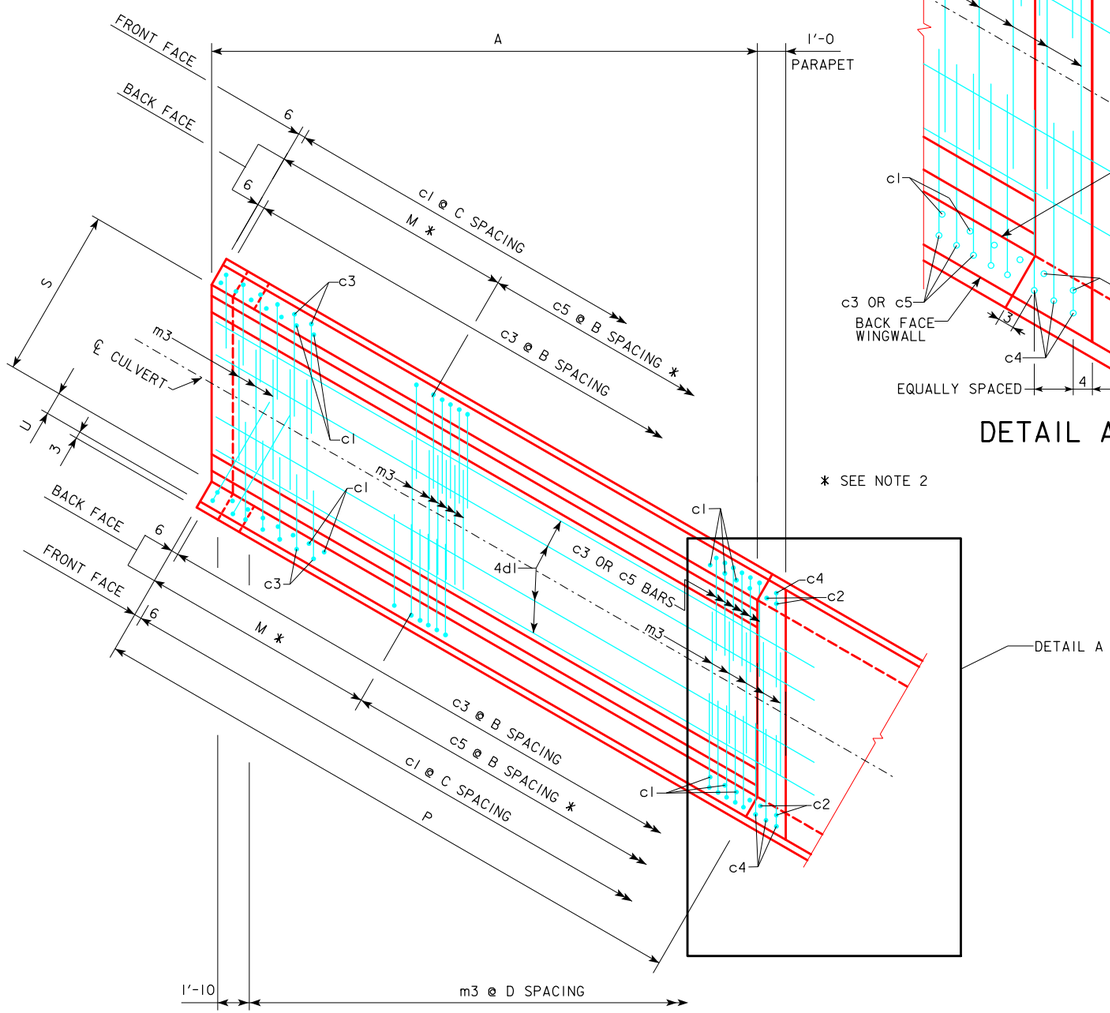

PLAN VIEW - BOTTOM APRON REINFORCING

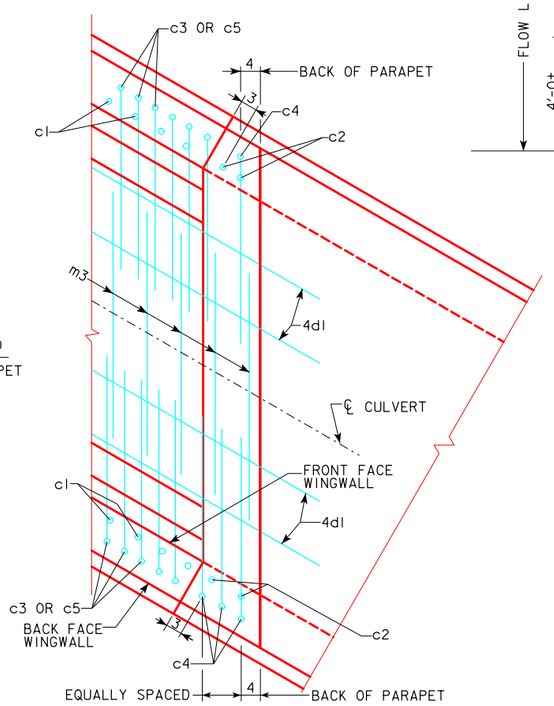

DETAIL A

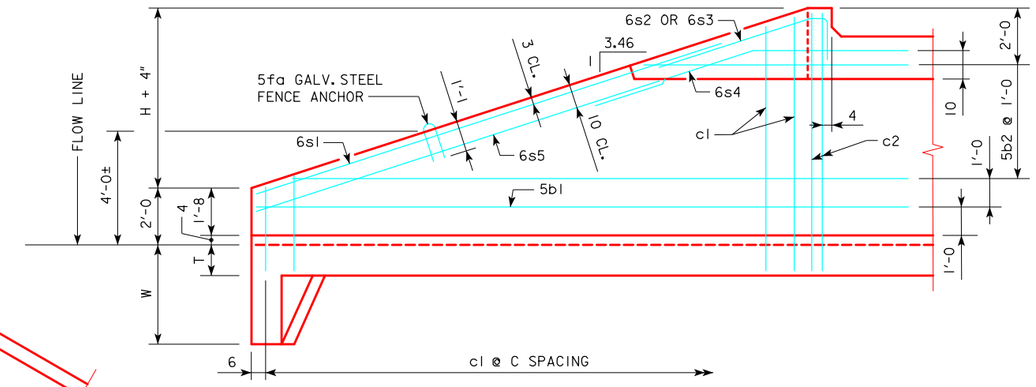

TYPICAL VIEW - FRONT FACE WINGWALL REINFORCING

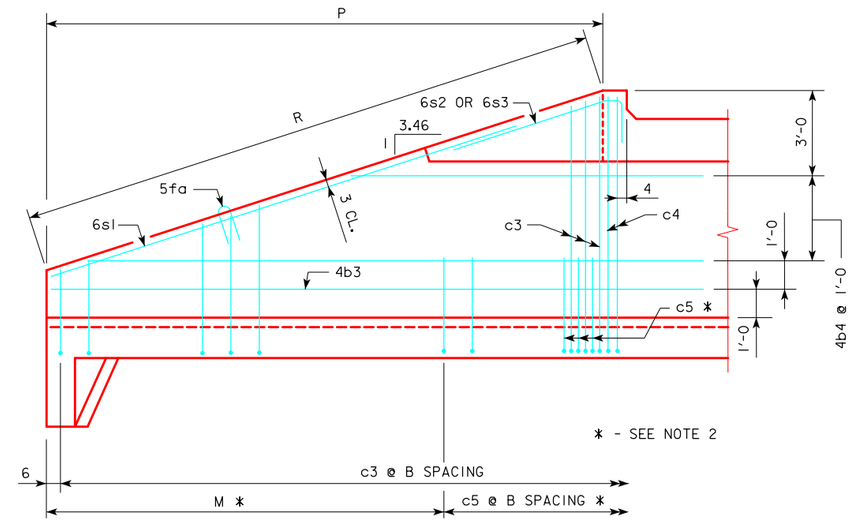

TYPICAL VIEW - BACK FACE WINGWALL REINFORCING

NOTES :

1. BAR SPACINGS AND POSITIONS SHOWN ARE SIMILAR FOR ALL SIZES OF HEADWALLS IN THIS STANDARD.
2. NOT APPLICABLE FOR THE FOLLOWING HEADWALL SIZES: 10x5, 10x4, 8x6, 8x5, 8x4, 6x6, 6x5, 6x4, 6x3, 5x6, 5x5, 5x4, AND 5x3.
3. FOR HEADWALL DIMENSIONS AND BAR SPACING SEE DRAWING PWH 30-1-12.
4. WINGWALL BARS CONSISTENTLY REFERENCED FROM END OF WING FOR ALL WINGWALLS.
5. APRON m3 BARS ARE TO BE CENTERED ON ℄ CULVERT.
6. B.F.V. (c4) AND F.F.V. (c2) BARS ARE APPROXIMATELY 4" FROM THE BACK OF PARAPET FOR ALL HEADWALLS.

07-2016
LATEST REVISION DATE

APPROVED BY BRIDGE ENGINEER

IOWA DOT Highway Division

STANDARD DESIGN - SINGLE REINFORCED CONCRETE BOX CULVERTS

PARALLEL WING HEADWALLS

APRIL, 2012

WINGWALL ELEVATIONS & BOTTOM APRON REINFORCING 30° SKEW

PWH 30-3-12

REVISED 07-2016 - CHANGED 10" VERTICAL DIMENSION FROM PERMISSIBLE WALL CONSTRUCTION JOINT TO 6s4 BAR. (DIMENSION WAS 1'-8 VERTICAL FROM TOP OF PARAPET TO 6s4 BAR.)
ENGLISHLRFDSIGNEDSINGLECULVERTS.DGN - PWH 30-3-12 - THIS SHEET ISSUED 04-12.

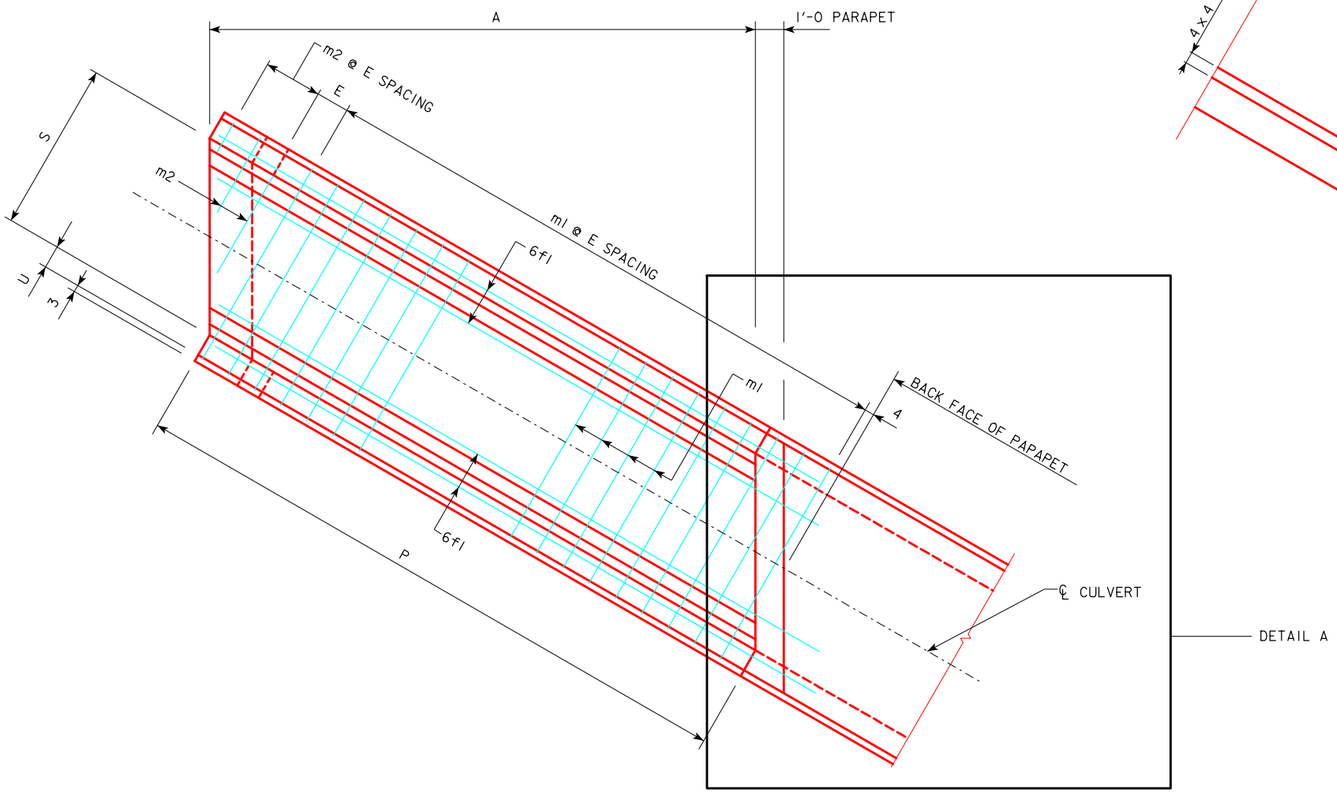

PLAN VIEW - TOP APRON REINFORCING

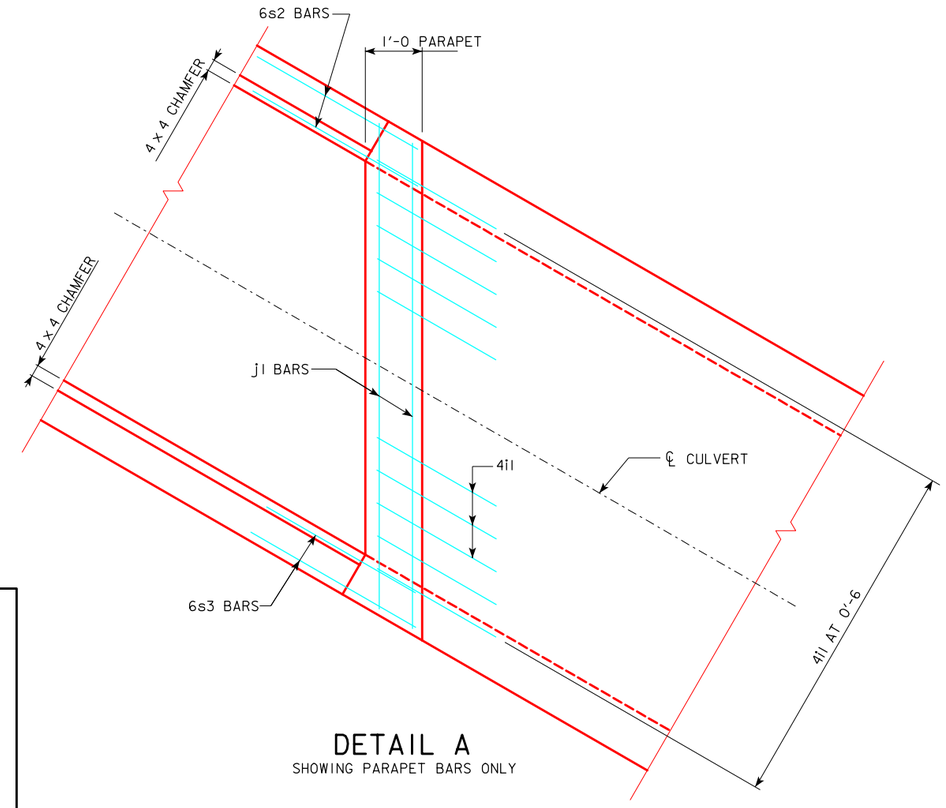

DETAIL A
SHOWING PARAPET BARS ONLY

NOTES :

1. BAR SPACINGS AND POSITIONS SHOWN ARE SIMILAR FOR ALL SIZES OF HEADWALLS IN THIS STANDARD.
2. FOR HEADWALL DIMENSIONS AND BAR SPACING SEE DRAWING PWH 30-1-12.
3. TOP TRANSVERSE APRON BARS ARE REFERENCED APPROXIMATELY 4" FROM THE BACK OF THE PARAPET FOR ALL HEADWALLS.

LATEST REVISION DATE

APPROVED BY BRIDGE ENGINEER

IOWA DOT Highway Division

STANDARD DESIGN - SINGLE REINFORCED CONCRETE BOX CULVERTS

PARALLEL WING HEADWALLS

APRIL, 2012

PARAPET REINFORCING & TOP APRON REINFORCING 30° SKEW

PWH 30-4-12

ENGLISHLRFDSIGNEDSINGLECULVERTS.DGN - PWH 30-4-12 - THIS SHEET ISSUED 04-12.

BILL OF REINFORCING FOR ONE HEADWALL 30° SKEW CULVERT SPAN x CULVERT HEIGHT

LOCATION	SHAPE	12′ x 12′				12′ x 11′				12′ x 10′			
		BAR	NO.	LENGTH	WT.	BAR	NO.	LENGTH	WT.	BAR	NO.	LENGTH	WT.
FENCE ANCHOR (GALV.)		5fa	2	2′-10	6	5fa	2	2′-10	6	5fa	2	2′-10	6
WINGWALL, F.F.H.		5b1	2	45′-10	100	5b1	2	42′-4	92	5b1	2	38′-11	81
WINGWALL, F.F.H.		5b2	22 VAR	2 EACH 10′-1:44′-8	636	5b2	20 VAR	2 EACH 10′-1:41′-3	540	5b2	18 VAR	2 EACH 10′-1:37′-9	449
WINGWALL, B.F.H.		4b3	2	46′-2	64	4b3	2	42′-8	60	4b3	2	39′-2	52
WINGWALL, B.F.H.		4b4	20 VAR	2 EACH 13′-10:45′-0	398	4b4	18 VAR	2 EACH 13′-10:41′-6	335	4b4	16 VAR	2 EACH 13′-9:38′-0	277
WINGWALL, F.F.V.		5c1	170 VAR	2 EACH 2′-9:14′-10	1559	5c1	156 VAR	2 EACH 2′-9:13′-10	1349	5c1	96 VAR	2 EACH 2′-9:12′-11	784
WINGWALL, F.F.V. (O)		5c2	2	15′-0	31	5c2	2	14′-0	29	5c2	2	13′-0	27
WINGWALL, F.F.V. (A)		5c2	2	15′-0	31	5c2	2	14′-0	29	5c2	2	13′-0	27
WINGWALL, B.F.V.		6c3	86 VAR	2 EACH 6′-4:18′-5	1599	6c3	78 VAR	2 EACH 6′-4:17′-3	1381	6c3	72 VAR	2 EACH 6′-4:16′-5	1230
WINGWALL, B.F.V. (O)		6c4	1	18′-6	28	6c4	1	17′-6	26	6c4	1	16′-6	25
WINGWALL, B.F.V. (A)		6c4	3	18′-6	83	6c4	3	17′-6	79	6c4	3	16′-6	74
WINGWALL, B.F.V.		6c5	54	8′-6	689	6c5	50	8′-6	638	6c5	46	8′-6	587
APRON, LONGIT., BOTT.		4d1	11	45′-9	351	4d1	11	42′-3	325	4d1	11	38′-9	285
APRON, LONGIT., TOP		6f1	13	45′-9	932	6f1	13	42′-3	864	6f1	13	38′-9	757
PARAPET, VERTICAL		4i1	28	7′-0	131	4i1	28	7′-0	131	4i1	28	7′-0	131
PARAPET, HORIZ.		8j1	4	15′-9	168	8j1	4	15′-9	168	8j1	4	15′-5	165
APRON, TRANS., TOP		6m1	54	14′-2	1149	6m1	49	14′-2	1043	6m1	45	13′-10	935
APRON, TRANS., TOP		6m2	8 VAR	3′-1:12′-2	92	6m2	9 VAR	2′-4:12′-8	101	6m2	8 VAR	2′-7:11′-9	86
APRON, TRANS., BOTT.		5m3	73	13′-0	990	5m3	67	13′-0	908	6m3	31	13′-6	629
CURTAIN, HORIZ.		6p1	6	16′-0	144	6p1	6	16′-0	144	6p1	6	15′-8	141
WING SLOPE, BOTH F.		6s1	4	40′-3	254	6s1	4	36′-8	220	6s1	4	33′-1	199
WING SLOPE, BOTH F. (O)		6s2	2	8′-4	25	6s2	2	8′-4	25	6s2	2	8′-5	25
WING SLOPE, BOTH F. (A)		6s3	2	8′-10	27	6s3	2	8′-10	27	6s3	2	8′-10	27
WING SLOPE, F. F.		6s4	2	12′-0	36	6s4	2	12′-0	36	6s4	2	12′-0	36
WING SLOPE, F. F.		6s5	2	38′-1	114	6s5	2	34′-6	104	6s5	2	30′-10	93
CURTAIN, VERT.		5t1	14	7′-11	116	5t1	14	7′-8	112	5t1	14	7′-5	108
CURTAIN, VERT., ENDS		5t2	4	8′-1	34	5t2	4	7′-10	33	5t2	4	7′-7	32
BRACKET, VERT.		5u1	4	6′-8	28	5u1	4	6′-5	27	5u1	4	6′-2	26

LOCATION	12′ x 9′				12′ x 8′			
	BAR	NO.	LENGTH	WT.	BAR	NO.	LENGTH	WT.
FENCE ANCHOR (GALV.)	5fa	2	2′-10	6	5fa	2	2′-10	6
WINGWALL, F.F.H.	5b1	2	35′-5	74	5b1	2	32′-0	67
WINGWALL, F.F.H.	5b2	16 VAR	2 EACH 10′-1:34′-3	370	5b2	14 VAR	2 EACH 10′-1:30′-10	299
WINGWALL, B.F.H.	4b3	2	35′-8	48	4b3	2	32′-3	43
WINGWALL, B.F.H.	4b4	14 VAR	2 EACH 13′-9:34′-6	226	4b4	12 VAR	2 EACH 13′-9:31′-1	180
WINGWALL, F.F.V.	5c1	86 VAR	2 EACH 2′-9:11′-10	654	5c1	58 VAR	2 EACH 2′-9:10′-10	411
WINGWALL, F.F.V. (O)	5c2	2	12′-0	25	5c2	2	11′-0	23
WINGWALL, F.F.V. (A)	5c2	2	12′-0	25	5c2	2	11′-0	23
WINGWALL, B.F.V.	5c3	64 VAR	2 EACH 6′-4:15′-3	720	5c3	58 VAR	2 EACH 6′-4:14′-5	628
WINGWALL, B.F.V. (O)	5c4	1	15′-6	16	5c4	1	14′-6	15
WINGWALL, B.F.V. (A)	5c4	3	15′-6	48	5c4	3	14′-6	45
WINGWALL, B.F.V.	5c5	42	8′-6	372	5c5	36	8′-6	319
APRON, LONGIT., BOTT.	4d1	11	35′-4	260	4d1	11	31′-10	234
APRON, LONGIT., TOP	6f1	13	35′-4	690	6f1	13	31′-10	622
PARAPET, VERTICAL	4i1	28	7′-0	131	4i1	28	7′-0	131
PARAPET, HORIZ.	8j1	4	15′-5	165	8j1	4	15′-5	165
APRON, TRANS., TOP	6m1	40	13′-10	831	6m1	35	13′-10	727
APRON, TRANS., TOP	6m2	8 VAR	3′-1:12′-3	92	6m2	9 VAR	2′-4:12′-8	101
APRON, TRANS., BOTT.	5m3	28	12′-8	370	5m3	25	12′-8	330
CURTAIN, HORIZ.	6p1	6	15′-8	141	6p1	6	15′-8	141
WING SLOPE, BOTH F.	6s1	4	29′-5	177	6s1	4	25′-10	155
WING SLOPE, BOTH F. (O)	6s2	2	8′-5	25	6s2	2	8′-5	25
WING SLOPE, BOTH F. (A)	6s3	2	8′-10	27	6s3	2	8′-10	27
WING SLOPE, F. F.	6s4	2	12′-0	36	6s4	2	12′-0	36
WING SLOPE, F. F.	6s5	2	27′-3	82	6s5	2	23′-8	71
CURTAIN, VERT.	5t1	14	7′-2	105	5t1	14	6′-11	101
CURTAIN, VERT., ENDS	5t2	4	7′-4	31	5t2	4	7′-1	30
BRACKET, VERT.	5u1	4	6′-0	25	5u1	4	5′-9	24

LOCATION	12′ x 7′				12′ x 6′			
	BAR	NO.	LENGTH	WT.	BAR	NO.	LENGTH	WT.
FENCE ANCHOR (GALV.)	5fa	2	2′-10	6	5fa	2	2′-10	6
WINGWALL, F.F.H.	5b1	2	28′-6	59	5b1	2	25′-1	52
WINGWALL, F.F.H.	5b2	12 VAR	2 EACH 10′-1:27′-4	234	5b2	10 VAR	2 EACH 10′-0:23′-11	177
WINGWALL, B.F.H.	4b3	2	28′-8	38	4b3	2	25′-3	34
WINGWALL, B.F.H.	4b4	10 VAR	2 EACH 13′-8:27′-7	138	4b4	8 VAR	2 EACH 13′-8:24′-1	101
WINGWALL, F.F.V.	5c1	50 VAR	2 EACH 2′-9:9′-8	324	4c1	44 VAR	2 EACH 2′-9:8′-9	169
WINGWALL, F.F.V. (O)	5c2	2	10′-0	21	4c2	2	9′-0	12
WINGWALL, F.F.V. (A)	5c2	2	10′-0	21	4c2	2	9′-0	12
WINGWALL, B.F.V.	5c3	50 VAR	2 EACH 6′-4:13′-3	511	5c3	44 VAR	2 EACH 6′-4:12′-4	428
WINGWALL, B.F.V. (O)	5c4	1	13′-6	14	5c4	1	12′-6	13
WINGWALL, B.F.V. (A)	5c4	3	13′-6	42	5c4	3	12′-6	39
WINGWALL, B.F.V.	5c5	34	8′-6	301	5c5	28	8′-6	248
APRON, LONGIT., BOTT.	4d1	11	28′-5	209	4d1	11	24′-11	183
APRON, LONGIT., TOP	6f1	13	28′-5	555	6f1	13	24′-11	487
PARAPET, VERTICAL	4i1	28	7′-0	131	4i1	28	7′-0	131
PARAPET, HORIZ.	8j1	4	15′-2	162	8j1	4	15′-2	162
APRON, TRANS., TOP	6m1	31	13′-8	636	6m1	26	13′-8	534
APRON, TRANS., TOP	6m2	8 VAR	2′-9:11′-10	88	6m2	8 VAR	3′-3:12′-4	94
APRON, TRANS., BOTT.	4m3	22	11′-7	170	4m3	19	11′-7	147
CURTAIN, HORIZ.	6p1	5	15′-6	116	6p1	5	15′-6	116
WING SLOPE, BOTH F.	6s1	4	22′-3	134	6s1	4	18′-8	112
WING SLOPE, BOTH F. (O)	6s2	2	8′-5	25	6s2	2	8′-4	25
WING SLOPE, BOTH F. (A)	6s3	2	8′-10	27	6s3	2	8′-9	26
WING SLOPE, F. F.	6s4	2	12′-0	36	6s4	2	12′-0	36
WING SLOPE, F. F.	6s5	2	20′-0	60	6s5	2	16′-5	49
CURTAIN, VERT.	5t1	14	6′-8	97	5t1	14	6′-5	94
CURTAIN, VERT., ENDS	5t2	4	6′-10	29	5t2	4	6′-7	27
BRACKET, VERT.	5u1	4	5′-7	23	5u1	4	5′-4	22

LOCATION	12′ x 5′				12′ x 4′			
	BAR	NO.	LENGTH	WT.	BAR	NO.	LENGTH	WT.
FENCE ANCHOR (GALV.)	5fa	2	2′-10	6	5fa	2	2′-10	6
WINGWALL, F.F.H.	5b1	2	21′-7	45	5b1	2	18′-1	38
WINGWALL, F.F.H.	5b2	8 VAR	2 EACH 10′-0:20′-5	127	5b2	6 VAR	2 EACH 10′-0:17′-0	84
WINGWALL, B.F.H.	4b3	2	21′-9	29	4b3	2	18′-4	24
WINGWALL, B.F.H.	4b4	6 VAR	2 EACH 13′-8:20′-7	69	4b4	4 VAR	2 EACH 13′-8:17′-2	41
WINGWALL, F.F.V.	4c1	36 VAR	2 EACH 2′-9:7′-8	125	4c1	30 VAR	2 EACH 2′-9:6′-9	95
WINGWALL, F.F.V. (O)	4c2	2	8′-0	11	4c2	2	7′-0	9
WINGWALL, F.F.V. (A)	4c2	2	8′-0	11	4c2	2	7′-0	9
WINGWALL, B.F.V.	5c3	36 VAR	2 EACH 6′-4:11′-3	330	5c3	30 VAR	2 EACH 6′-4:10′-4	261
WINGWALL, B.F.V. (O)	5c4	1	11′-6	12	5c4	1	10′-6	11
WINGWALL, B.F.V. (A)	5c4	3	11′-6	36	5c4	3	10′-6	33
WINGWALL, B.F.V.	5c5	26	7′-11	215	5c5	22	7′-8	176
APRON, LONGIT., BOTT.	4d1	11	21′-6	158	4d1	11	18′-0	132
APRON, LONGIT., TOP	6f1	13	21′-6	420	6f1	13	18′-0	351
PARAPET, VERTICAL	4i1	28	7′-0	131	4i1	28	7′-0	131
PARAPET, HORIZ.	8j1	4	15′-2	162	8j1	4	15′-2	162
APRON, TRANS., TOP	6m1	22	13′-8	452	6m1	17	13′-8	349
APRON, TRANS., TOP	6m2	8 VAR	2′-5:11′-6	84	6m2	8 VAR	2′-11:12′-0	90
APRON, TRANS., BOTT.	4m3	16	11′-7	124	4m3	13	11′-7	101
CURTAIN, HORIZ.	6p1	5	15′-6	116	6p1	5	15′-6	116
WING SLOPE, BOTH F.	6s1	4	15′-0	90	6s1	4	11′-5	69
WING SLOPE, BOTH F. (O)	6s2	2	8′-4	25	6s2	2	8′-4	25
WING SLOPE, BOTH F. (A)	6s3	2	8′-9	26	6s3	2	8′-9	26
WING SLOPE, F. F.	6s4	2	12′-0	36	6s4	2	12′-0	36
WING SLOPE, F. F.	6s5	2	12′-10	39	6s5	2	9′-3	28
CURTAIN, VERT.	5t1	14	6′-5	94	5t1	14	6′-5	94
CURTAIN, VERT., ENDS	5t2	4	6′-7	27	5t2	4	6′-7	27
BRACKET, VERT.	5u1	4	5′-4	22	5u1	4	5′-4	22

ESTIMATED QUANTITIES ONE HEADWALL		9815 LBS.			8832 LBS.			7294 LBS.			5772 LBS.		
REINF. STEEL													
CONCRETE		PARAPET Δ	1.9	59.5 CU.YD.	PARAPET Δ	1.9	53.5 CU.YD.	PARAPET Δ	1.8	43.8 CU.YD.	PARAPET Δ	1.8	38.8 CU.YD.
		WINGWALLS	25.1		WINGWALLS	21.6		WINGWALLS	15.2		WINGWALLS	12.7	
		APRON	32.5		APRON	30.0		APRON	26.8		APRON	24.3	

ESTIMATED QUANTITIES ONE HEADWALL	4979 LBS.			4207 LBS.			3536 LBS.			3022 LBS.			2546 LBS.		
CONCRETE	PARAPET Δ	1.8	34.1 CU.YD.	PARAPET Δ	1.7	28.2 CU.YD.	PARAPET Δ	1.7	24.1 CU.YD.	PARAPET Δ	1.7	20.4 CU.YD.	PARAPET Δ	1.7	16.8 CU.YD.
	WINGWALLS	10.4		WINGWALLS	7.4		WINGWALLS	5.7		WINGWALLS	4.2		WINGWALLS	2.9	
	APRON	21.9		APRON	19.1		APRON	16.7		APRON	14.5		APRON	12.2	

Δ INCLUDES TOP OF WINGWALL QUANTITIES.

NOTE: WEIGHT OF BARS OVER 40′-0 LONG INCLUDE AN ALLOWANCE OF 2′-0 FOR LAP.

(A) - INDICATES BAR LOCATED AT ACUTE CORNER.
(O) - INDICATES BAR LOCATED AT OBTUSE CORNER.
REFER TO SHEET PWH 30-1-12 FOR ACUTE AND OBTUSE CORNER LOCATIONS.

BENT BAR DETAILS

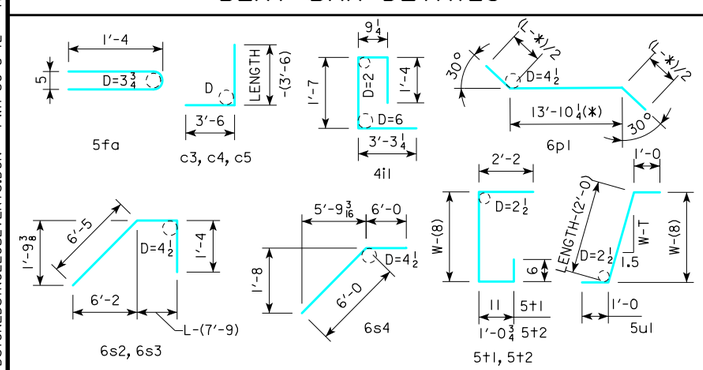

NOTE: ALL DIMENSIONS ARE OUT TO OUT
D = PIN DIAMETER
SEE TABLE AT RIGHT FOR PIN DIAMETER "D" OF c BARS

c BAR PIN DIAMETER	
BAR SIZE	D
4	3
5	3¾
6	4½

HEADWALL NOTES:

THIS HEADWALL IS BASED ON A 3:1 SLOPE NORMAL TO CENTERLINE OF ROADWAY.

THE SIDES OF THE FOOTING ARE TO BE FORMED TO INSURE CORRECT LINE AND GRADE.

ALL EXPOSED CORNERS OF 90° OR SHARPER ARE TO BE FILLETED WITH A ¾" DRESSED AND BEVELED STRIP.

ALL REINFORCING IS TO BE SECURELY WIRED IN PLACE BEFORE THE CONCRETE IS POURED. ALL SLAB AND FLOOR REINFORCING STEEL IS TO BE SUPPORTED BY BAR CHAIRS AT INTERVALS OF NOT MORE THAN 3′-0 IN EITHER DIRECTION AS OUTLINED IN THE STANDARD SPECIFICATIONS.

CLEAR DISTANCE FROM FACE OF CONCRETE TO NEAR REINFORCING BAR IS TO BE 2" UNLESS OTHERWISE NOTED OR SHOWN. CLEARANCE TO THE BOTTOM ENDS OF VERTICAL BARS SHALL BE 3 INCHES.

CONCRETE QUANTITIES ARE ESTIMATED FROM BACK OF PARAPET.

HORIZONTAL TAILS OF BARS "b" & "s" ESTIMATED TO EXTEND 2′-0 BEYOND BACK OF PARAPET (INTO END OF BARREL). LONGITUDINAL BARS "4d1" AND "6f1" ESTIMATED TO PROJECT INTO END SECTION OF BARREL A MINIMUM OF 2′-0 BEYOND BACK OF PARAPET. THE "LENGTH" COLUMN REFLECTS TOTAL NUMBER OF FEET NECESSARY TO MEET THESE REQUIREMENTS.

07-2016
LATEST REVISION DATE

APPROVED BY BRIDGE ENGINEER

IOWA DOT Highway Division

STANDARD DESIGN - SINGLE REINFORCED CONCRETE BOX CULVERTS

PARALLEL WING HEADWALLS

APRIL, 2012

QUANTITY TABULATION
12′-0 SPAN
30° SKEW

PWH 30-5-12

REVISED 07-2016 - CHANGED FENCE ANCHOR BAR (5fa) FROM 3′-1 TO 2′-10.
ENGLISHLRFDSIGNEDSINGLECULVERTS.DGN - PWH 30-5-12 - THIS SHEET ISSUED 04-12.

BILL OF REINFORCING FOR ONE HEADWALL 30° SKEW CULVERT SPAN x CULVERT HEIGHT

LOCATION	SHAPE	10′ x 12′				10′ x 11″				10′ x 10′			
		BAR	NO.	LENGTH	WT.	BAR	NO.	LENGTH	WT.	BAR	NO.	LENGTH	WT.
FENCE ANCHOR (GALV.)		5fa	2	2′-10	6	5fa	2	2′-10	6	5fa	2	2′-10	6
WINGWALL, F.F.H.		5b1	2	45′-10	100	5b1	2	42′-4	92	5b1	2	38′-11	81
WINGWALL, F.F.H.		5b2	22 VAR	2 EACH 10′-1:44′-8	636	5b2	20 VAR	2 EACH 10′-1:41′-3	540	5b2	18 VAR	2 EACH 10′-1:37′-9	449
WINGWALL, B.F.H.		4b3	2	46′-2	64	4b3	2	42′-8	60	4b3	2	39′-2	52
WINGWALL, B.F.H.		4b4	20 VAR	2 EACH 13′-10:45′-0	398	4b4	18 VAR	2 EACH 13′-10:41′-6	335	4b4	16 VAR	2 EACH 13′-9:38′-0	277
WINGWALL, F.F.V.		5c1	170 VAR	2 EACH 2′-8:14′-9	1544	5c1	156 VAR	2 EACH 2′-8:13′-9	1336	5c1	96 VAR	2 EACH 2′-8:12′-10	776
WINGWALL, F.F.V. (O)		5c2	2	14′-11	31	5c2	2	13′-11	29	5c2	2	12′-11	27
WINGWALL, F.F.V. (A)		5c2	2	14′-11	31	5c2	2	13′-11	29	5c2	2	12′-11	27
WINGWALL, B.F.V.		6c3	86 VAR	2 EACH 6′-3:18′-4	1588	6c3	78 VAR	2 EACH 6′-3:17′-2	1372	6c3	72 VAR	2 EACH 6′-3:16′-4	1221
WINGWALL, B.F.V. (O)		6c4	1	18′-5	28	6c4	1	17′-5	26	6c4	1	16′-5	25
WINGWALL, B.F.V. (A)		6c4	3	18′-5	83	6c4	3	17′-5	78	6c4	3	16′-5	74
WINGWALL, B.F.V.		6c5	54	8′-6	689	6c5	50	8′-6	638	6c5	46	8′-6	587
APRON, LONGIT., BOTT.		4d1	9	45′-9	287	4d1	9	42′-3	266	4d1	9	38′-9	233
APRON, LONGIT., TOP		6f1	11	45′-9	789	6f1	11	42′-3	731	6f1	11	38′-9	640
PARAPET, VERTICAL		4i1	24	7′-0	112	4i1	24	7′-0	112	4i1	24	7′-0	112
PARAPET, HORIZ.		7j1	4	13′-6	110	7j1	4	13′-6	110	7j1	4	13′-1	107
APRON, TRANS., TOP		6m1	55	12′-2	1005	6m1	50	12′-2	914	6m1	45	11′-10	800
APRON, TRANS., TOP		6m2	7 VAR	2′-1:9′-11	63	6m2	7 VAR	2′-7:10′-5	68	6m2	7 VAR	2′-11:10′-9	72
APRON, TRANS., BOTT.		5m3	73	10′-9	818	5m3	67	10′-9	751	5m3	61	10′-4	657
CURTAIN, HORIZ.		6p1	6	13′-9	124	6p1	6	13′-9	124	6p1	6	13′-5	121
WING SLOPE, BOTH F.		6s1	4	40′-3	254	6s1	4	36′-8	220	6s1	4	33′-1	199
WING SLOPE, BOTH F. (O)		6s2	2	8′-4	25	6s2	2	8′-4	25	6s2	2	8′-5	25
WING SLOPE, BOTH F. (A)		6s3	2	8′-10	27	6s3	2	8′-10	27	6s3	2	8′-10	27
WING SLOPE, F. F.		6s4	2	12′-0	36	6s4	2	12′-0	36	6s4	2	12′-0	36
WING SLOPE, F. F.		6s5	2	38′-1	114	6s5	2	34′-6	104	6s5	2	30′-10	93
CURTAIN, VERT.		5t1	12	7′-11	99	5t1	12	7′-8	96	5t1	12	7′-5	93
CURTAIN, VERT., ENDS		5t2	4	8′-1	34	5t2	4	7′-10	33	5t2	4	7′-7	32
BRACKET, VERT.		5u1	4	6′-8	28	5u1	4	6′-5	27	5u1	4	6′-2	26

LOCATION	10′ x 9′				10′ x 8′				10′ x 7′			
	BAR	NO.	LENGTH	WT.	BAR	NO.	LENGTH	WT.	BAR	NO.	LENGTH	WT.
FENCE ANCHOR (GALV.)	5fa	2	2′-10	6	5fa	2	2′-10	6	5fa	2	2′-10	6
WINGWALL, F.F.H.	5b1	2	35′-5	74	5b1	2	32′-0	67	5b1	2	28′-6	59
WINGWALL, F.F.H.	5b2	16 VAR	2 EACH 10′-1:34′-3	370	5b2	14 VAR	2 EACH 10′-1:30′-10	299	5b2	12 VAR	2 EACH 10′-1:27′-4	234
WINGWALL, B.F.H.	4b3	2	35′-8	48	4b3	2	32′-3	43	4b3	2	28′-8	38
WINGWALL, B.F.H.	4b4	14 VAR	2 EACH 13′-9:34′-6	226	4b4	12 VAR	2 EACH 13′-9:31′-1	180	4b4	10 VAR	2 EACH 13′-8:27′-7	138
WINGWALL, F.F.V.	5c1	86 VAR	2 EACH 2′-8:11′-9	647	5c1	58 VAR	2 EACH 2′-8:10′-9	406	5c1	50 VAR	2 EACH 2′-8:9′-7	319
WINGWALL, F.F.V. (O)	5c2	2	11′-11	25	5c2	2	10′-11	23	5c2	2	9′-11	21
WINGWALL, F.F.V. (A)	5c2	2	11′-11	25	5c2	2	10′-11	23	5c2	2	9′-11	21
WINGWALL, B.F.V.	5c3	64 VAR	2 EACH 6′-3:15′-2	715	5c3	58 VAR	2 EACH 6′-3:14′-4	623	5c3	50 VAR	2 EACH 6′-3:13′-2	506
WINGWALL, B.F.V. (O)	5c4	1	15′-5	16	5c4	1	14′-5	15	5c4	1	13′-5	14
WINGWALL, B.F.V. (A)	5c4	3	15′-5	48	5c4	3	14′-5	45	5c4	3	13′-5	42
WINGWALL, B.F.V.	6c5	42	8′-6	372	5c5	36	8′-6	319	5c5	34	8′-6	301
APRON, LONGIT., BOTT.	4d1	9	35′-4	212	4d1	9	31′-10	191	4d1	9	28′-5	171
APRON, LONGIT., TOP	6f1	11	35′-4	584	6f1	11	31′-10	526	6f1	11	28′-5	470
PARAPET, VERTICAL	4i1	24	7′-0	112	4i1	24	7′-0	112	4i1	24	7′-0	112
PARAPET, HORIZ.	7j1	4	13′-1	107	7j1	4	13′-1	107	7j1	4	12′-11	106
APRON, TRANS., TOP	6m1	41	11′-10	729	6m1	36	11′-10	640	6m1	32	11′-8	561
APRON, TRANS., TOP	6m2	7 VAR	2′-1:9′-11	63	6m2	7 VAR	2′-7:10′-5	68	6m2	6 VAR	3′-0:9′-6	56
APRON, TRANS., BOTT.	6m3	28	11′-2	470	5m3	25	10′-4	269	5m3	22	10′-2	233
CURTAIN, HORIZ.	6p1	6	13′-5	121	6p1	6	13′-5	121	6p1	5	13′-3	100
WING SLOPE, BOTH F.	6s1	4	29′-5	177	6s1	4	25′-10	155	6s1	4	22′-3	134
WING SLOPE, BOTH F. (O)	6s2	2	8′-5	25	6s2	2	8′-5	25	6s2	2	8′-5	25
WING SLOPE, BOTH F. (A)	6s3	2	8′-10	27	6s3	2	8′-10	27	6s3	2	8′-10	27
WING SLOPE, F. F.	6s4	2	12′-0	36	6s4	2	12′-0	36	6s4	2	12′-0	36
WING SLOPE, F. F.	6s5	2	27′-3	82	6s5	2	23′-8	71	6s5	2	20′-0	60
CURTAIN, VERT.	5t1	12	7′-2	90	5t1	12	6′-11	87	5t1	12	6′-8	83
CURTAIN, VERT., ENDS	5t2	4	7′-4	31	5t2	4	7′-1	30	5t2	4	6′-10	29
BRACKET, VERT.	5u1	4	6′-0	25	5u1	4	5′-9	24	5u1	4	5′-6	23

LOCATION	10′ x 6′				10′ x 5′				10′ x 4′			
	BAR	NO.	LENGTH	WT.	BAR	NO.	LENGTH	WT.	BAR	NO.	LENGTH	WT.
FENCE ANCHOR (GALV.)	5fa	2	2′-10	6	5fa	2	2′-10	6	5fa	2	2′-10	6
WINGWALL, F.F.H.	5b1	2	25′-1	52	5b1	2	21′-7	45	5b1	2	18′-1	38
WINGWALL, F.F.H.	5b2	10 VAR	2 EACH 10′-0:23′-11	177	5b2	8 VAR	2 EACH 10′-0:20′-5	127	5b2	6 VAR	2 EACH 10′-0:17′-0	84
WINGWALL, B.F.H.	4b3	2	25′-3	34	4b3	2	21′-9	29	4b3	2	18′-4	24
WINGWALL, B.F.H.	4b4	8 VAR	2 EACH 13′-8:24′-1	101	4b4	6 VAR	2 EACH 13′-8:20′-7	69	4b4	4 VAR	2 EACH 13′-8:17′-2	41
WINGWALL, F.F.V.	4c1	44 VAR	2 EACH 2′-8:8′-8	167	4c1	36 VAR	2 EACH 2′-8:7′-7	123	4c1	30 VAR	2 EACH 2′-8:6′-8	94
WINGWALL, F.F.V. (O)	4c2	2	8′-11	12	4c2	2	7′-11	11	4c2	2	6′-11	9
WINGWALL, F.F.V. (A)	4c2	2	8′-11	12	4c2	2	7′-11	11	4c2	2	6′-11	9
WINGWALL, B.F.V.	5c3	44 VAR	2 EACH 6′-3:12′-3	425	6c3	36 VAR	2 EACH 6′-3:11′-2	471	6c3	30 VAR	2 EACH 6′-3:10′-3	372
WINGWALL, B.F.V. (O)	5c4	1	12′-5	13	6c4	1	11′-5	17	6c4	1	10′-5	16
WINGWALL, B.F.V. (A)	5c4	3	12′-5	39	6c4	3	11′-5	51	6c4	3	10′-5	47
WINGWALL, B.F.V.	5c5	28	8′-5	246	c5	—	—	—	c5	—	—	—
APRON, LONGIT., BOTT.	4d1	9	24′-11	150	4d1	9	21′-6	129	4d1	9	18′-0	108
APRON, LONGIT., TOP	6f1	11	24′-11	412	6f1	11	21′-6	355	6f1	11	18′-0	297
PARAPET, VERTICAL	4i1	24	7′-0	112	4i1	24	7′-0	112	4i1	24	7′-0	112
PARAPET, HORIZ.	7j1	4	12′-11	106	7j1	4	12′-11	106	7j1	4	12′-11	106
APRON, TRANS., TOP	6m1	27	11′-8	473	6m1	22	11′-8	386	6m1	18	11′-8	315
APRON, TRANS., TOP	6m2	7 VAR	2′-3:10′-0	64	6m2	7 VAR	2′-9:10′-6	70	6m2	6 VAR	3′-3:9′-8	58
APRON, TRANS., BOTT.	4m3	19	9′-4	118	4m3	16	9′-4	100	4m3	13	9′-4	81
CURTAIN, HORIZ.	6p1	5	13′-3	100	6p1	5	13′-3	100	6p1	5	13′-3	100
WING SLOPE, BOTH F.	6s1	4	18′-8	112	6s1	4	15′-0	90	6s1	4	11′-5	69
WING SLOPE, BOTH F. (O)	6s2	2	8′-4	25	6s2	2	8′-4	25	6s2	2	8′-4	25
WING SLOPE, BOTH F. (A)	6s3	2	8′-9	26	6s3	2	8′-9	26	6s3	2	8′-9	26
WING SLOPE, F. F.	6s4	2	12′-0	36	6s4	2	12′-0	36	6s4	2	12′-0	36
WING SLOPE, F. F.	6s5	2	16′-5	49	6s5	2	12′-10	39	6s5	2	9′-3	28
CURTAIN, VERT.	5t1	12	6′-5	80	5t1	12	6′-5	80	5t1	12	6′-5	80
CURTAIN, VERT., ENDS	5t2	4	6′-7	27	5t2	4	6′-7	27	5t2	4	6′-7	27
BRACKET, VERT.	5u1	4	5′-4	22	5u1	4	5′-4	22	5u1	4	5′-4	22

ESTIMATED QUANTITIES ONE HEADWALL		10′ x 12′	10′ x 11″	10′ x 10′	10′ x 9′	10′ x 8′	10′ x 7′	10′ x 6′	10′ x 5′	10′ x 4′
REINF. STEEL		9123 LBS.	8185 LBS.	6875 LBS.	5463 LBS.	4538 LBS.	3925 LBS.	3196 LBS.	2663 LBS.	2230 LBS.
CONCRETE	PARAPET Δ	1.7	1.7	1.6	1.6	1.6	1.5	1.5	1.5	1.5
	WINGWALLS	25.1	21.6	15.2	12.7	10.4	7.4	5.7	4.2	2.9
	APRON	26.7	24.6	21.9	19.9	17.9	15.6	13.6	11.9	10.1
		53.5 CU.YD.	47.9 CU.YD.	38.7 CU.YD.	34.2 CU.YD.	29.9 CU.YD.	24.5 CU.YD.	20.8 CU.YD.	17.6 CU.YD.	14.5 CU.YD.

Δ INCLUDES TOP OF WINGWALL QUANTITIES.

NOTE: WEIGHT OF BARS OVER 40′-0 LONG INCLUDE AN ALLOWANCE OF 2′-0 FOR LAP.

(A) - INDICATES BAR LOCATED AT ACUTE CORNER.
(O) - INDICATES BAR LOCATED AT OBTUSE CORNER.
REFER TO SHEET PWH 30-1-12 FOR ACUTE AND OBTUSE CORNER LOCATIONS.

BENT BAR DETAILS

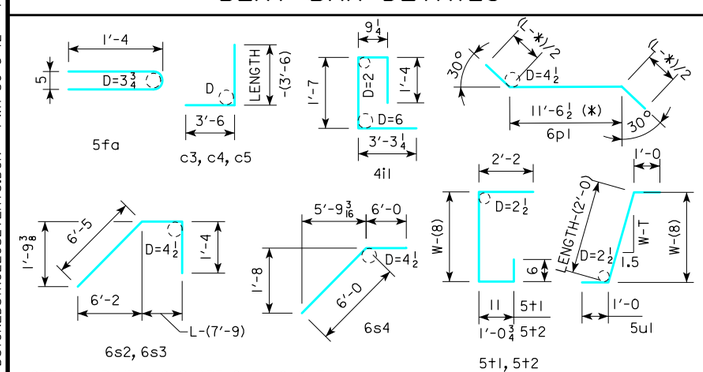

NOTE: ALL DIMENSIONS ARE OUT TO OUT
D = PIN DIAMETER
SEE TABLE AT RIGHT FOR PIN DIAMETER "D" OF c BARS

c BAR PIN DIAMETER	
BAR SIZE	D
4	3
5	3¾
6	4½

HEADWALL NOTES:

THIS HEADWALL IS BASED ON A 3:1 SLOPE NORMAL TO CENTERLINE OF ROADWAY.

THE SIDES OF THE FOOTING ARE TO BE FORMED TO INSURE CORRECT LINE AND GRADE.

ALL EXPOSED CORNERS OF 90° OR SHARPER ARE TO BE FILLETED WITH A ¾" DRESSED AND BEVELED STRIP.

ALL REINFORCING IS TO BE SECURELY WIRED IN PLACE BEFORE THE CONCRETE IS POURED. ALL SLAB AND FLOOR REINFORCING STEEL IS TO BE SUPPORTED BY BAR CHAIRS AT INTERVALS OF NOT MORE THAN 3′-0 IN EITHER DIRECTION AS OUTLINED IN THE STANDARD SPECIFICATIONS.

CLEAR DISTANCE FROM FACE OF CONCRETE TO NEAR REINFORCING BAR IS TO BE 2" UNLESS OTHERWISE NOTED OR SHOWN. CLEARANCE TO THE BOTTOM ENDS OF VERTICAL BARS SHALL BE 3 INCHES.

CONCRETE QUANTITIES ARE ESTIMATED FROM BACK OF PARAPET.

HORIZONTAL TAILS OF BARS "b" & "s" ESTIMATED TO EXTEND 2′-0 BEYOND BACK OF PARAPET (INTO END OF BARREL). LONGITUDINAL BARS "4d1" AND "6f1" ESTIMATED TO PROJECT INTO END SECTION OF BARREL A MINIMUM OF 2′-0 BEYOND BACK OF PARAPET. THE "LENGTH" COLUMN REFLECTS TOTAL NUMBER OF FEET NECESSARY TO MEET THESE REQUIREMENTS.

07-2016
LATEST REVISION DATE

APPROVED BY BRIDGE ENGINEER

IOWA DOT Highway Division

STANDARD DESIGN - SINGLE REINFORCED CONCRETE BOX CULVERTS

PARALLEL WING HEADWALLS

APRIL, 2012

QUANTITY TABULATION
10′-0 SPAN
30° SKEW

PWH 30-6-12

REVISED 07-2016 - CHANGED FENCE ANCHOR BAR (5fa) FROM 3′-1 TO 2′-10.
ENGLISHLRFDSIGNEDSINGLECULVERTS.DGN - PWH 30-6-12 - THIS SHEET ISSUED 04-12.

BILL OF REINFORCING FOR ONE HEADWALL 30° SKEW CULVERT SPAN x CULVERT HEIGHT

LOCATION	SHAPE	8′ x 10′				8′ x 9″				8′ x 8′			
		BAR	NO.	LENGTH	WT.	BAR	NO.	LENGTH	WT.	BAR	NO.	LENGTH	WT.
FENCE ANCHOR (GALV.)		5fa	2	2′-10	6	5fa	2	2′-10	6	5fa	2	2′-10	6
WINGWALL, F.F.H.		5b1	2	38′-11	81	5b1	2	35′-5	74	5b1	2	32′-0	67
WINGWALL, F.F.H.		5b2	18 VAR	2 EACH 10′-1:37′-9	449	5b2	16 VAR	2 EACH 10′-1:34′-4	371	5b2	14 VAR	2 EACH 10′-1:30′-10	299
WINGWALL, B.F.H.		4b3	2	39′-2	52	4b3	2	35′-8	48	4b3	2	32′-3	43
WINGWALL, B.F.H.		4b4	16 VAR	2 EACH 13′-9:38′-0	277	4b4	14 VAR	2 EACH 13′-9:34′-6	226	4b4	12 VAR	2 EACH 13′-9:31′-1	180
WINGWALL, F.F.V.		5c1	142 VAR	2 EACH 2′-6:12′-7	1117	6c1	64 VAR	2 EACH 2′-6:11′-5	669	5c1	58 VAR	2 EACH 2′-6:10′-7	396
WINGWALL, F.F.V. (O)		5c2	2	12′-9	27	6c2	2	11′-9	35	5c2	2	10′-9	22
WINGWALL, F.F.V. (A)		5c2	2	12′-9	27	6c2	2	11′-9	35	5c2	2	10′-9	22
WINGWALL, B.F.V.		6c3	72 VAR	2 EACH 6′-1:16′-2	1203	5c3	64 VAR	2 EACH 6′-1:15′-0	704	5c3	58 VAR	2 EACH 6′-1:14′-2	613
WINGWALL, B.F.V. (O)		6c4	1	16′-3	24	5c4	1	15′-3	16	5c4	1	14′-3	15
WINGWALL, B.F.V. (A)		6c4	3	16′-3	73	5c4	3	15′-3	48	5c4	3	14′-3	45
WINGWALL, B.F.V.		6c5	46	8′-6	587	5c5	42	8′-6	372	5c5	36	8′-6	319
APRON, LONGIT., BOTT.		4d1	7	38′-9	181	4d1	7	35′-4	165	4d1	7	31′-10	149
APRON, LONGIT., TOP		6f1	9	38′-9	524	6f1	9	35′-4	478	6f1	9	31′-10	430
PARAPET, VERTICAL		4i1	19	7′-0	89	4i1	19	7′-0	89	4i1	19	7′-0	89
PARAPET, HORIZ.		7j1	4	10′-9	88	7j1	4	10′-9	88	7j1	4	10′-9	88
APRON, TRANS., TOP		6m1	35	9′-10	517	6m1	31	9′-10	458	6m1	28	9′-10	414
APRON, TRANS., TOP		6m2	4 VAR	2′-4:7′-7	30	6m2	4 VAR	3′-3:8′-6	35	6m2	4 VAR	2′-6:7′-8	31
APRON, TRANS., BOTT.		5m3	61	8′-0	509	6m3	28	8′-11	375	6m3	25	8′-11	335
CURTAIN, HORIZ.		6p1	6	11′-1	100	6p1	6	11′-1	100	6p1	6	11′-1	100
WING SLOPE, BOTH F.		6s1	4	33′-1	199	6s1	4	29′-5	177	6s1	4	25′-10	155
WING SLOPE, BOTH F. (O)		6s2	2	8′-5	25	6s2	2	8′-5	25	6s2	2	8′-5	25
WING SLOPE, BOTH F. (A)		6s3	2	8′-10	27	6s3	2	8′-10	27	6s3	2	8′-10	27
WING SLOPE, F. F.		6s4	2	12′-0	36	6s4	2	12′-0	36	6s4	2	12′-0	36
WING SLOPE, F. F.		6s5	2	30′-10	93	6s5	2	27′-3	82	6s5	2	23′-8	71
CURTAIN, VERT.		5t1	10	7′-5	77	5t1	10	7′-2	75	5t1	10	6′-11	72
CURTAIN, VERT., ENDS		5t2	4	7′-7	32	5t2	4	7′-4	31	5t2	4	7′-1	30
BRACKET, VERT.		5u1	4	6′-2	26	5u1	4	5′-11	25	5u1	4	5′-8	24
ESTIMATED QUANTITIES ONE HEADWALL	REINF. STEEL	6476 LBS.				4870 LBS.				4103 LBS.			
	CONCRETE	PARAPET Δ	1.4	32.9 CU.YD.		PARAPET Δ	1.4	29.0 CU.YD.		PARAPET Δ	1.4	25.2 CU.YD.	
		WINGWALLS	15.2			WINGWALLS	12.7			WINGWALLS	10.4		
		APRON	16.3			APRON	14.9			APRON	13.4		

LOCATION	SHAPE	8′ x 7′				8′ x 6′				8′ x 5′				8′ x 4′			
		BAR	NO.	LENGTH	WT.	BAR	NO.	LENGTH	WT.	BAR	NO.	LENGTH	WT.	BAR	NO.	LENGTH	WT.
FENCE ANCHOR (GALV.)		5fa	2	2′-10	6	5fa	2	2′-10	6	5fa	2	2′-10	6	5fa	2	2′-10	6
WINGWALL, F.F.H.		5b1	2	28′-6	59	5b1	2	25′-1	52	5b1	2	21′-7	45	5b1	2	18′-1	38
WINGWALL, F.F.H.		5b2	12 VAR	2 EACH 10′-1:27′-4	234	5b2	10 VAR	2 EACH 10′-0:23′-11	177	5b2	8 VAR	2 EACH 10′-0:20′-5	127	5b2	6 VAR	2 EACH 10′-0:17′-0	84
WINGWALL, B.F.H.		4b3	2	28′-8	38	4b3	2	25′-3	34	4b3	2	21′-9	29	4b3	2	18′-4	24
WINGWALL, B.F.H.		4b4	10 VAR	2 EACH 13′-8:27′-7	138	4b4	8 VAR	2 EACH 13′-8:24′-1	101	4b4	6 VAR	2 EACH 13′-8:20′-7	69	4b4	4 VAR	2 EACH 13′-8:17′-2	41
WINGWALL, F.F.V.		5c1	50 VAR	2 EACH 2′-6:9′-5	311	4c1	44 VAR	2 EACH 2′-6:8′-6	162	4c1	36 VAR	2 EACH 2′-6:7′-5	119	4c1	30 VAR	2 EACH 2′-6:6′-6	90
WINGWALL, F.F.V. (O)		5c2	2	9′-9	20	4c2	2	8′-9	12	4c2	2	7′-9	10	4c2	2	6′-9	9
WINGWALL, F.F.V. (A)		5c2	2	9′-9	20	4c2	2	8′-9	12	4c2	2	7′-9	10	4c2	2	6′-9	9
WINGWALL, B.F.V.		5c3	50 VAR	2 EACH 6′-1:13′-0	498	6c3	44 VAR	2 EACH 6′-1:12′-1	600	6c3	36 VAR	2 EACH 6′-1:11′-0	462	5c3	30 VAR	2 EACH 6′-1:10′-1	253
WINGWALL, B.F.V. (O)		5c4	1	13′-3	14	6c4	1	12′-3	18	6c4	1	11′-3	17	5c4	1	10′-3	11
WINGWALL, B.F.V. (A)		5c4	3	13′-3	41	6c4	3	12′-3	55	6c4	3	11′-3	51	5c4	3	10′-3	32
WINGWALL, B.F.V.		5c5	34	8′-6	301	c5	—	—	—	c5	—	—	—	c5	—	—	—
APRON, LONGIT., BOTT.		4d1	7	28′-5	133	4d1	7	24′-11	117	4d1	7	21′-6	101	4d1	7	18′-0	84
APRON, LONGIT., TOP		6f1	9	28′-5	384	6f1	9	24′-11	337	6f1	9	21′-6	291	6f1	9	18′-0	243
PARAPET, VERTICAL		4i1	19	7′-0	89	4i1	19	7′-0	89	4i1	19	7′-0	89	4i1	19	7′-0	89
PARAPET, HORIZ.		7j1	4	10′-7	87	7j1	4	10′-7	87	7j1	4	10′-7	87	7j1	4	10′-7	87
APRON, TRANS., TOP		6m1	24	9′-8	348	6m1	21	9′-8	305	6m1	17	9′-8	247	6m1	14	9′-8	203
APRON, TRANS., TOP		6m2	4 VAR	3′-4:8′-6	36	6m2	4 VAR	2′-6:7′-9	31	6m2	4 VAR	3′-5:8′-8	36	6m2	4 VAR	2′-8:7′-10	32
APRON, TRANS., BOTT.		5m3	22	7′-10	180	4m3	19	7′-0	89	4m3	16	7′-0	75	4m3	13	7′-0	61
CURTAIN, HORIZ.		6p1	5	10′-11	82	6p1	5	10′-11	82	6p1	5	10′-11	82	6p1	5	10′-11	82
WING SLOPE, BOTH F.		6s1	4	22′-3	134	6s1	4	18′-8	112	6s1	4	15′-0	90	6s1	4	11′-5	69
WING SLOPE, BOTH F. (O)		6s2	2	8′-5	25	6s2	2	8′-4	25	6s2	2	8′-4	25	6s2	2	8′-4	25
WING SLOPE, BOTH F. (A)		6s3	2	8′-10	27	6s3	2	8′-9	26	6s3	2	8′-9	26	6s3	2	8′-9	26
WING SLOPE, F. F.		6s4	2	12′-0	36	6s4	2	12′-0	36	6s4	2	12′-0	36	6s4	2	12′-0	36
WING SLOPE, F. F.		6s5	2	20′-0	60	6s5	2	16′-5	49	6s5	2	12′-10	39	6s5	2	9′-3	28
CURTAIN, VERT.		5t1	10	6′-8	70	5t1	10	6′-5	67	5t1	10	6′-5	67	5t1	10	6′-5	67
CURTAIN, VERT., ENDS		5t2	4	6′-10	29	5t2	4	6′-7	27	5t2	4	6′-7	27	5t2	4	6′-7	27
BRACKET, VERT.		5u1	4	5′-6	23	5u1	4	5′-3	22	5u1	4	5′-3	22	5u1	4	5′-3	22
ESTIMATED QUANTITIES ONE HEADWALL	REINF. STEEL	3423 LBS.				2730 LBS.				2285 LBS.				1778 LBS.			
	CONCRETE	PARAPET Δ	1.3	20.4 CU.YD.		PARAPET Δ	1.3	17.2 CU.YD.		PARAPET Δ	1.3	14.4 CU.YD.		PARAPET Δ	1.3	11.8 CU.YD.	
		WINGWALLS	7.4			WINGWALLS	5.7			WINGWALLS	4.2			WINGWALLS	2.9		
		APRON	11.7			APRON	10.2			APRON	8.9			APRON	7.6		

Δ INCLUDES TOP OF WINGWALL QUANTITIES.

NOTE: WEIGHT OF BARS OVER 40′-0 LONG INCLUDE AN ALLOWANCE OF 2′-0 FOR LAP.

(A) - INDICATES BAR LOCATED AT ACUTE CORNER.
(O) - INDICATES BAR LOCATED AT OBTUSE CORNER.
REFER TO SHEET PWH 30-1-12 FOR ACUTE AND OBTUSE CORNER LOCATIONS.

BENT BAR DETAILS

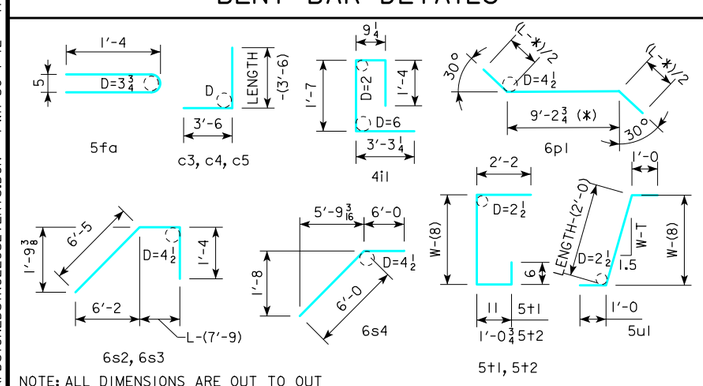

NOTE: ALL DIMENSIONS ARE OUT TO OUT
D = PIN DIAMETER
SEE TABLE AT RIGHT FOR PIN DIAMETER "D" OF c BARS

c BAR PIN DIAMETER	
BAR SIZE	D
4	3
5	3¾
6	4½

HEADWALL NOTES:

THIS HEADWALL IS BASED ON A 3:1 SLOPE NORMAL TO CENTERLINE OF ROADWAY.

THE SIDES OF THE FOOTING ARE TO BE FORMED TO INSURE CORRECT LINE AND GRADE.

ALL EXPOSED CORNERS OF 90° OR SHARPER ARE TO BE FILLETED WITH A ¾" DRESSED AND BEVELED STRIP.

ALL REINFORCING IS TO BE SECURELY WIRED IN PLACE BEFORE THE CONCRETE IS POURED. ALL SLAB AND FLOOR REINFORCING STEEL IS TO BE SUPPORTED BY BAR CHAIRS AT INTERVALS OF NOT MORE THAN 3′-0 IN EITHER DIRECTION AS OUTLINED IN THE STANDARD SPECIFICATIONS.

CLEAR DISTANCE FROM FACE OF CONCRETE TO NEAR REINFORCING BAR IS TO BE 2" UNLESS OTHERWISE NOTED OR SHOWN. CLEARANCE TO THE BOTTOM ENDS OF VERTICAL BARS SHALL BE 3 INCHES.

CONCRETE QUANTITIES ARE ESTIMATED FROM BACK OF PARAPET.

HORIZONTAL TAILS OF BARS "b" & "s" ESTIMATED TO EXTEND 2′-0 BEYOND BACK OF PARAPET (INTO END OF BARREL). LONGITUDINAL BARS "4d1" AND "6f1" ESTIMATED TO PROJECT INTO END SECTION OF BARREL A MINIMUM OF 2′-0 BEYOND BACK OF PARAPET. THE "LENGTH" COLUMN REFLECTS TOTAL NUMBER OF FEET NECESSARY TO MEET THESE REQUIREMENTS.

07-2016
LATEST REVISION DATE

APPROVED BY BRIDGE ENGINEER

IOWA DOT Highway Division

STANDARD DESIGN - SINGLE REINFORCED CONCRETE BOX CULVERTS

PARALLEL WING HEADWALLS

APRIL, 2012

QUANTITY TABULATION
8′-0 SPAN
30° SKEW

PWH 30-7-12

REVISED 07-2016 - CHANGED FENCE ANCHOR BAR (5fa) FROM 3′-1 TO 2′-10.
ENGLISHLRFDSIGNEDSINGLECULVERTS.DGN - PWH 30-7-12 - THIS SHEET ISSUED 04-12.

BILL OF REINFORCING FOR ONE HEADWALL 30° SKEW CULVERT SPAN x CULVERT HEIGHT

LOCATION	SHAPE	6′ x 8′				6′ x 7′				6′ x 6′				6′ x 5′				6′ x 4′				6′ x 3′			
		BAR	NO.	LENGTH	WT.	BAR	NO.	LENGTH	WT.	BAR	NO.	LENGTH	WT.	BAR	NO.	LENGTH	WT.	BAR	NO.	LENGTH	WT.	BAR	NO.	LENGTH	WT.
FENCE ANCHOR (GALV.)		5fa	2	2′-10	6	5fa	2	2′-10	6	5fa	2	2′-10	6	5fa	2	2′-10	6	5fa	2	2′-10	6	5fa	2	2′-10	6
WINGWALL, F.F.H.		5b1	2	32′-0	67	5b1	2	28′-6	59	5b1	2	25′-1	52	5b1	2	21′-7	45	5b1	2	18′-1	38	5b1	2	14′-8	31
WINGWALL, F.F.H.		5b2	14 VAR	2 EACH 10′-1:30′-10	299	5b2	12 VAR	2 EACH 10′-1:27′-4	234	5b2	10 VAR	2 EACH 10′-0:23′-11	177	5b2	8 VAR	2 EACH 10′-0:20′-5	127	5b2	6 VAR	2 EACH 10′-0:17′-0	84	5b2	4 VAR	2 EACH 10′-0:13′-6	49
WINGWALL, B.F.H.		4b3	2	32′-3	43	4b3	2	28′-8	38	4b3	2	25′-3	34	4b3	2	21′-9	29	4b3	2	18′-4	24	4b3	2	14′-10	20
WINGWALL, B.F.H.		4b4	12 VAR	2 EACH 13′-9:31′-1	180	4b4	10 VAR	2 EACH 13′-8:27′-7	138	4b4	8 VAR	2 EACH 13′-8:24′-1	101	4b4	6 VAR	2 EACH 13′-8:20′-7	69	4b4	4 VAR	2 EACH 13′-8:17′-2	41	4b4	2	13′-8	18′-0
WINGWALL, F.F.V.		5c1	58 VAR	2 EACH 2′-6:10′-7	396	5c1	50 VAR	2 EACH 2′-6:9′-5	311	4c1	44 VAR	2 EACH 2′-6:8′-6	162	4c1	36 VAR	2 EACH 2′-6:7′-5	119	4c1	30 VAR	2 EACH 2′-6:6′-6	90	4c1	24 VAR	2 EACH 2′-6:5′-8	65
WINGWALL, F.F.V. (O)		5c2	2	10′-9	22	5c2	2	9′-9	20	4c2	2	8′-9	12	4c2	2	7′-9	10	4c2	2	6′-9	9	4c2	2	5′-9	8
WINGWALL, F.F.V. (A)		5c2	2	10′-9	22	5c2	2	9′-9	20	4c2	2	8′-9	12	4c2	2	7′-9	10	4c2	2	6′-9	9	4c2	2	5′-9	8
WINGWALL, B.F.V.		5c3	58 VAR	2 EACH 6′-1:14′-2	613	5c3	50 VAR	2 EACH 6′-1:13′-0	498	6c3	44 VAR	2 EACH 6′-1:12′-1	600	5c3	36 VAR	2 EACH 6′-1:11′-0	321	4c3	30 VAR	2 EACH 6′-1:10′-1	162	4c3	24 VAR	2 EACH 6′-1:9′-3	123
WINGWALL, B.F.V. (O)		5c4	1	14′-3	15	5c4	1	13′-3	14	6c4	1	12′-3	18	5c4	1	11′-3	12	4c4	1	10′-3	7	4c4	1	9′-3	6
WINGWALL, B.F.V. (A)		5c4	3	14′-3	45	5c4	3	13′-3	41	6c4	3	12′-3	55	5c4	3	11′-3	35	4c4	3	10′-3	21	4c4	3	9′-3	19
WINGWALL, B.F.V.		5c5	36	8′-6	319	5c5	34	8′-6	301	c5	—	—	—	c5	—	—	—	c5	—	—	—	c5	—	—	—
APRON, LONGIT., BOTT.		4d1	6	31′-10	128	4d1	6	28′-5	114	4d1	6	24′-11	100	4d1	6	21′-6	86	4d1	6	18′-0	72	4d1	6	14′-6	58
APRON, LONGIT., TOP		6f1	7	31′-10	335	6f1	7	28′-5	299	6f1	7	24′-11	262	6f1	7	21′-6	226	6f1	7	18′-0	189	6f1	7	14′-6	152
PARAPET, VERTICAL		4i1	14	7′-0	65	4i1	14	7′-0	65	4i1	14	7′-0	65	4i1	14	7′-0	65	4i1	14	7′-0	65	4i1	14	7′-0	65
PARAPET, HORIZ.		7j1	4	8′-6	69	7j1	4	8′-3	67	7j1	4	8′-3	67	7j1	4	8′-3	67	7j1	4	8′-3	67	7j1	4	8′-3	67
APRON, TRANS., TOP		6m1	28	7′-10	329	6m1	25	7′-8	288	6m1	22	7′-8	253	6m1	18	7′-8	207	6m1	15	7′-8	173	6m1	11	7′-8	127
APRON, TRANS., TOP		6m2	3 VAR	3′-3:6′-8	22	6m2	3 VAR	2′-4:5′-9	18	6m2	2 VAR	3′-3:5′-0	12	6m2	3 VAR	2′-5:5′-11	19	6m2	2 VAR	3′-5:5′-1	13	6m2	3 VAR	2′-7:6′-0	19
APRON, TRANS., BOTT.		6m3	25	6′-7	247	5m3	22	5′-6	126	4m3	19	4′-8	59	4m3	16	4′-8	50	4m3	13	4′-8	41	4m3	10	4′-8	31
CURTAIN, HORIZ.		6p1	6	8′-9	79	6p1	5	8′-7	64	6p1	5	8′-7	64	6p1	5	8′-7	64	6p1	5	8′-7	64	6p1	5	8′-7	64
WING SLOPE, BOTH F.		6s1	4	25′-10	155	6s1	4	22′-3	134	6s1	4	18′-8	112	6s1	4	15′-0	90	6s1	4	11′-5	69	6s1	4	7′-10	47
WING SLOPE, BOTH F. (O)		6s2	2	8′-5	25	6s2	2	8′-5	25	6s2	2	8′-4	25	6s2	2	8′-4	25	6s2	2	8′-4	25	6s2	2	8′-4	25
WING SLOPE, BOTH F. (A)		6s3	2	8′-10	27	6s3	2	8′-10	27	6s3	2	8′-9	26	6s3	2	8′-9	26	6s3	2	8′-9	26	6s3	2	8′-9	26
WING SLOPE, F. F.		6s4	2	12′-0	36	6s4	2	12′-0	36	6s4	2	12′-0	36	6s4	2	12′-0	36	6s4	2	12′-0	36	6s4	2	12′-0	36
WING SLOPE, F. F.		6s5	2	23′-8	71	6s5	2	20′-0	60	6s5	2	16′-5	49	6s5	2	12′-10	39	6s5	2	9′-3	28	6s5	2	5′-7	17
CURTAIN, VERT.		5t1	7	6′-11	50	5t1	7	6′-8	49	5t1	7	6′-5	47	5t1	7	6′-5	47	5t1	7	6′-5	47	5t1	7	6′-5	47
CURTAIN, VERT., ENDS		5t2	4	7′-1	30	5t2	4	6′-10	29	5t2	4	6′-7	27	5t2	4	6′-7	27	5t2	4	6′-7	27	5t2	4	6′-7	27
BRACKET, VERT.		5u1	4	5′-8	24	5u1	4	5′-6	23	5u1	4	5′-3	22	5u1	4	5′-3	22	5u1	4	5′-3	22	5u1	4	5′-3	22

ESTIMATED QUANTITIES ONE HEADWALL		6′ x 8′			6′ x 7′			6′ x 6′			6′ x 5′			6′ x 4′			6′ x 3′		
REINF. STEEL		3719 LBS.			3104 LBS.			2455 LBS.			1879 LBS.			1455 LBS.			1183 LBS.		
CONCRETE	PARAPET Δ	1.3	22.7 CU.YD.	PARAPET Δ	1.2	18.2 CU.YD.	PARAPET Δ	1.2	15.3 CU.YD.	PARAPET Δ	1.2	12.7 CU.YD.	PARAPET Δ	1.2	10.3 CU.YD.	PARAPET Δ	1.2	8.2 CU.YD.
	WINGWALLS	10.4		WINGWALLS	7.4		WINGWALLS	5.7		WINGWALLS	4.2		WINGWALLS	2.9		WINGWALLS	1.8	
	APRON	11.0		APRON	9.6		APRON	8.4		APRON	7.3		APRON	6.2		APRON	5.2	

Δ INCLUDES TOP OF WINGWALL QUANTITIES.

NOTE: WEIGHT OF BARS OVER 40′-0 LONG INCLUDE AN ALLOWANCE OF 2′-0 FOR LAP.

(A) - INDICATES BAR LOCATED AT ACUTE CORNER.
(O) - INDICATES BAR LOCATED AT OBTUSE CORNER.
REFER TO SHEET PWH 30-1-12 FOR ACUTE AND OBTUSE CORNER LOCATIONS.

BENT BAR DETAILS

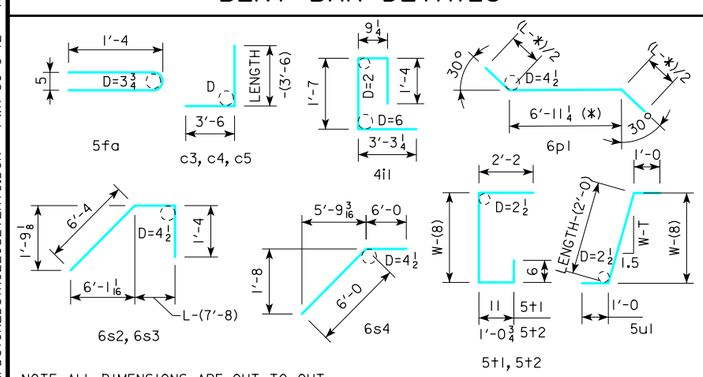

NOTE: ALL DIMENSIONS ARE OUT TO OUT
D = PIN DIAMETER
SEE TABLE AT RIGHT FOR PIN DIAMETER "D" OF c BARS

c BAR PIN DIAMETER	
BAR SIZE	D
4	3
5	3¾
6	4½

HEADWALL NOTES:

THIS HEADWALL IS BASED ON A 3:1 SLOPE NORMAL TO CENTERLINE OF ROADWAY.

THE SIDES OF THE FOOTING ARE TO BE FORMED TO INSURE CORRECT LINE AND GRADE.

ALL EXPOSED CORNERS OF 90° OR SHARPER ARE TO BE FILLETED WITH A ¾" DRESSED AND BEVELED STRIP.

ALL REINFORCING IS TO BE SECURELY WIRED IN PLACE BEFORE THE CONCRETE IS POURED. ALL SLAB AND FLOOR REINFORCING STEEL IS TO BE SUPPORTED BY BAR CHAIRS AT INTERVALS OF NOT MORE THAN 3′-0 IN EITHER DIRECTION AS OUTLINED IN THE STANDARD SPECIFICATIONS.

CLEAR DISTANCE FROM FACE OF CONCRETE TO NEAR REINFORCING BAR IS TO BE 2" UNLESS OTHERWISE NOTED OR SHOWN. CLEARANCE TO THE BOTTOM ENDS OF VERTICAL BARS SHALL BE 3 INCHES.

CONCRETE QUANTITIES ARE ESTIMATED FROM BACK OF PARAPET.

HORIZONTAL TAILS OF BARS "b" & "s" ESTIMATED TO EXTEND 2′-0 BEYOND BACK OF PARAPET (INTO END OF BARREL). LONGITUDINAL BARS "4d1" AND "6f1" ESTIMATED TO PROJECT INTO END SECTION OF BARREL A MINIMUM OF 2′-0 BEYOND BACK OF PARAPET. THE "LENGTH" COLUMN REFLECTS TOTAL NUMBER OF FEET NECESSARY TO MEET THESE REQUIREMENTS.

07-2016
LATEST REVISION DATE

APPROVED BY BRIDGE ENGINEER

IOWA DOT Highway Division

STANDARD DESIGN - SINGLE REINFORCED CONCRETE BOX CULVERTS

PARALLEL WING HEADWALLS

APRIL, 2012

QUANTITY TABULATION
6′-0 SPAN
30° SKEW

PWH 30-8-12

REVISED 07-2016 - CHANGED FENCE ANCHOR BAR (5fa) FROM 3′-1 TO 2′-10.
ENGLISHLRFDSIGNEDSINGLECULVERTS.DGN - PWH 30-8-12 - THIS SHEET ISSUED 04-12.

BILL OF REINFORCING FOR ONE HEADWALL
30° SKEW CULVERT SPAN x CULVERT HEIGHT

LOCATION	SHAPE	5′ x 6′				5′ x 5′				5′ x 4′				5′ x 3′			
		BAR	NO.	LENGTH	WT.	BAR	NO.	LENGTH	WT.	BAR	NO.	LENGTH	WT.	BAR	NO.	LENGTH	WT.
FENCE ANCHOR (GALV.)		5fa	2	2′-10	6	5fa	2	2′-10	6	5fa	2	2′-10	6	5fa	2	2′-10	6
WINGWALL, F.F.H.		5b1	2	25′-1	52	5b1	2	21′-7	45	5b1	2	18′-1	38	5b1	2	14′-8	31
WINGWALL, F.F.H.		5b2	10 VAR	2 EACH 10′-0:23′-11	177	5b2	8 VAR	2 EACH 10′-0:20′-5	127	5b2	6 VAR	2 EACH 10′-0:17′-0	84	5b2	4 VAR	2 EACH 10′-0:13′-6	49
WINGWALL, B.F.H.		4b3	2	25′-3	34	4b3	2	21′-9	29	4b3	2	18′-4	24	4b3	2	14′-10	20
WINGWALL, B.F.H.		4b4	8 VAR	2 EACH 13′-8:24′-1	101	4b4	6 VAR	2 EACH 13′-8:20′-7	69	4b4	4 VAR	2 EACH 13′-8:17′-2	41	4b4	2	13′-8	18
WINGWALL, F.F.V.		4c1	44 VAR	2 EACH 2′-6:8′-6	162	4c1	36 VAR	2 EACH 2′-6:7′-5	119	4c1	30 VAR	2 EACH 2′-6:6′-6	90	4c1	24 VAR	2 EACH 2′-6:5′-8	65
WINGWALL, F.F.V. (O)		4c2	2	8′-9	12	4c2	2	7′-9	10	4c2	2	6′-9	9	4c2	2	5′-9	8
WINGWALL, F.F.V. (A)		4c2	2	8′-9	12	4c2	2	7′-9	10	4c2	2	6′-9	9	4c2	2	5′-9	8
WINGWALL, B.F.V.		6c3	44 VAR	2 EACH 6′-1:12′-1	600	5c3	36 VAR	2 EACH 6′-1:11′-0	321	4c3	30 VAR	2 EACH 6′-1:10′-1	162	4c3	24 VAR	2 EACH 6′-1:9′-3	123
WINGWALL, B.F.V. (O)		6c4	1	12′-3	18	5c4	1	11′-3	12	4c4	1	10′-3	7	4c4	1	9′-3	6
WINGWALL, B.F.V. (A)		6c4	3	12′-3	55	5c4	3	11′-3	35	4c4	3	10′-3	21	4c4	3	9′-3	19
WINGWALL, B.F.V.		c5	–	–	–	c5	–	–	–	c5	–	–	–	c5	–	–	–
APRON, LONGIT., BOTT.		4d1	5	24′-11	83	4d1	5	21′-6	72	4d1	5	18′-0	60	4d1	5	14′-6	48
APRON, LONGIT., TOP		6f1	6	24′-11	225	6f1	6	21′-6	194	6f1	6	18′-0	162	6f1	6	14′-6	131
PARAPET, VERTICAL		4i1	12	7′-0	56	4i1	12	7′-0	56	4i1	12	7′-0	56	4i1	12	7′-0	56
PARAPET, HORIZ.		7j1	4	7′-1	58	7j1	4	7′-1	58	7j1	4	7′-1	58	7j1	4	7′-1	58
APRON, TRANS., TOP		6m1	22	6′-8	220	6m1	18	6′-8	180	6m1	15	6′-8	150	6m1	11	6′-8	110
APRON, TRANS., TOP		6m2	2 VAR	2′-9:4′-6	11	6m2	2 VAR	3′-8:5′-5	14	6m2	2 VAR	2′-11:4′-7	11	6m2	3 VAR	2′-1:5′-6	17
APRON, TRANS., BOTT.		5m3	19	4′-4	86	4m3	16	3′-6	37	4m3	13	3′-6	30	4m3	10	3′-6	23
CURTAIN, HORIZ.		6p1	5	7′-5	56	6p1	5	7′-5	56	6p1	5	7′-5	56	6p1	5	7′-5	56
WING SLOPE, BOTH F.		6s1	4	18′-8	112	6s1	4	15′-0	90	6s1	4	11′-5	69	6s1	4	7′-10	47
WING SLOPE, BOTH F. (O)		6s2	2	8′-4	25	6s2	2	8′-4	25	6s2	2	8′-4	25	6s2	2	8′-4	25
WING SLOPE, BOTH F. (A)		6s3	2	8′-9	26	6s3	2	8′-9	26	6s3	2	8′-9	26	6s3	2	8′-9	26
WING SLOPE, F. F.		6s4	2	12′-0	36	6s4	2	12′-0	36	6s4	2	12′-0	36	6s4	2	12′-0	36
WING SLOPE, F. F.		6s5	2	16′-5	49	6s5	2	12′-10	39	6s5	2	9′-3	28	6s5	2	5′-7	17
CURTAIN, VERT.		5t1	6	6′-5	40	5t1	6	6′-5	40	5t1	6	6′-5	40	5t1	6	6′-5	40
CURTAIN, VERT., ENDS		5t2	4	6′-7	27	5t2	4	6′-7	27	5t2	4	6′-7	27	5t2	4	6′-7	27
BRACKET, VERT.		5u1	4	5′-3	22	5u1	4	5′-3	22	5u1	4	5′-3	22	5u1	4	5′-3	22

ESTIMATED QUANTITIES ONE HEADWALL		5′ x 6′			5′ x 5′			5′ x 4′			5′ x 3′		
REINF. STEEL		2361 LBS.			1755 LBS.			1347 LBS.			1092 LBS.		
CONCRETE	PARAPET Δ	1.1	14.2 CU.YD.		1.1	11.8 CU.YD.		1.1	9.5 CU.YD.		1.1	7.5 CU.YD.	
	WINGWALLS	5.7			4.2			2.9			1.8		
	APRON	7.4			6.5			5.5			4.6		

Δ INCLUDES TOP OF WINGWALL QUANTITIES.

NOTE: WEIGHT OF BARS OVER 40′-0 LONG INCLUDE AN ALLOWANCE OF 2′-0 FOR LAP.

(A) - INDICATES BAR LOCATED AT ACUTE CORNER.
(O) - INDICATES BAR LOCATED AT OBTUSE CORNER.
REFER TO SHEET PWH 30-1-12 FOR ACUTE AND OBTUSE CORNER LOCATIONS.

c BAR PIN DIAMETER	
BAR SIZE	D
4	3
5	$3\frac{3}{4}$
6	$4\frac{1}{2}$

BENT BAR DETAILS

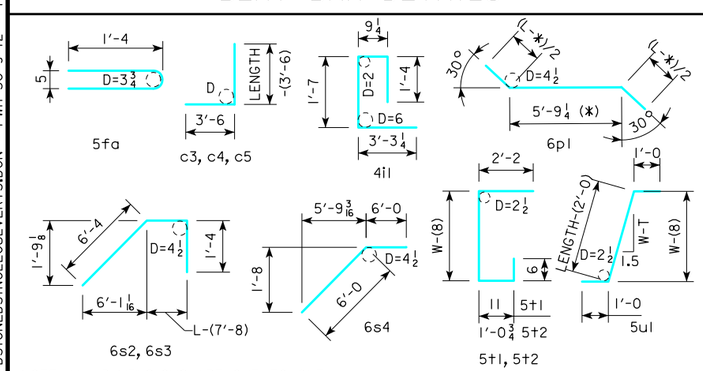

NOTE: ALL DIMENSIONS ARE OUT TO OUT
D = PIN DIAMETER
SEE TABLE AT RIGHT FOR PIN DIAMETER "D" OF c BARS

HEADWALL NOTES:

THIS HEADWALL IS BASED ON A 3:1 SLOPE NORMAL TO CENTERLINE OF ROADWAY.

THE SIDES OF THE FOOTING ARE TO BE FORMED TO INSURE CORRECT LINE AND GRADE.

ALL EXPOSED CORNERS OF 90° OR SHARPER ARE TO BE FILLETED WITH A $\frac{3}{4}$" DRESSED AND BEVELED STRIP.

ALL REINFORCING IS TO BE SECURELY WIRED IN PLACE BEFORE THE CONCRETE IS POURED. ALL SLAB AND FLOOR REINFORCING STEEL IS TO BE SUPPORTED BY BAR CHAIRS AT INTERVALS OF NOT MORE THAN 3′-0 IN EITHER DIRECTION AS OUTLINED IN THE STANDARD SPECIFICATIONS.

CLEAR DISTANCE FROM FACE OF CONCRETE TO NEAR REINFORCING BAR IS TO BE 2" UNLESS OTHERWISE NOTED OR SHOWN. CLEARANCE TO THE BOTTOM ENDS OF VERTICAL BARS SHALL BE 3 INCHES.

CONCRETE QUANTITIES ARE ESTIMATED FROM BACK OF PARAPET.

HORIZONTAL TAILS OF BARS "b" & "s" ESTIMATED TO EXTEND 2′-0 BEYOND BACK OF PARAPET (INTO END OF BARREL). LONGITUDINAL BARS "4d1" AND "6f1" ESTIMATED TO PROJECT INTO END SECTION OF BARREL A MINIMUM OF 2′-0 BEYOND BACK OF PARAPET. THE "LENGTH" COLUMN REFLECTS TOTAL NUMBER OF FEET NECESSARY TO MEET THESE REQUIREMENTS.

07-2016
LATEST REVISION DATE

APPROVED BY BRIDGE ENGINEER

IOWADOT Highway Division

STANDARD DESIGN - SINGLE REINFORCED CONCRETE BOX CULVERTS

PARALLEL WING HEADWALLS

APRIL, 2012

QUANTITY TABULATION
5′-0 SPAN
30° SKEW

PWH 30-9-12

REVISED 07-2016 - CHANGED FENCE ANCHOR BAR (5fa) FROM 3′-1 TO 2′-10.
ENGLISHLRFDSIGNEDSINGLECULVERTS.DGN - PWH 30-9-12 - THIS SHEET ISSUED 04-12.

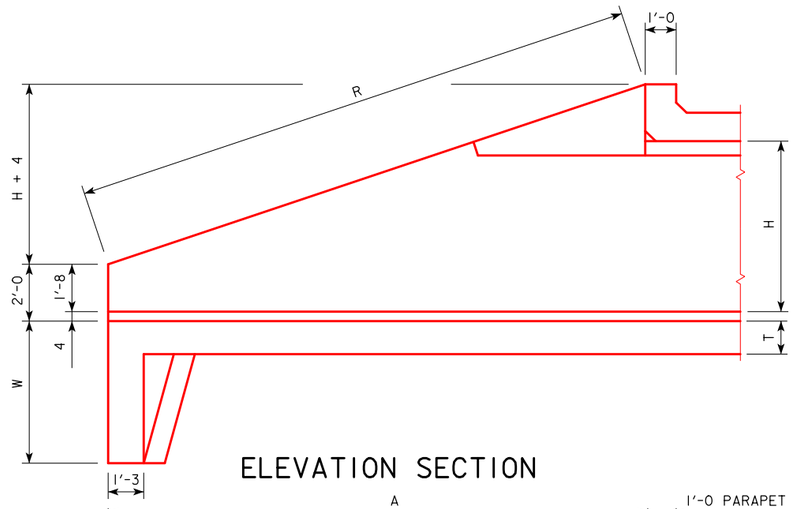

ELEVATION SECTION

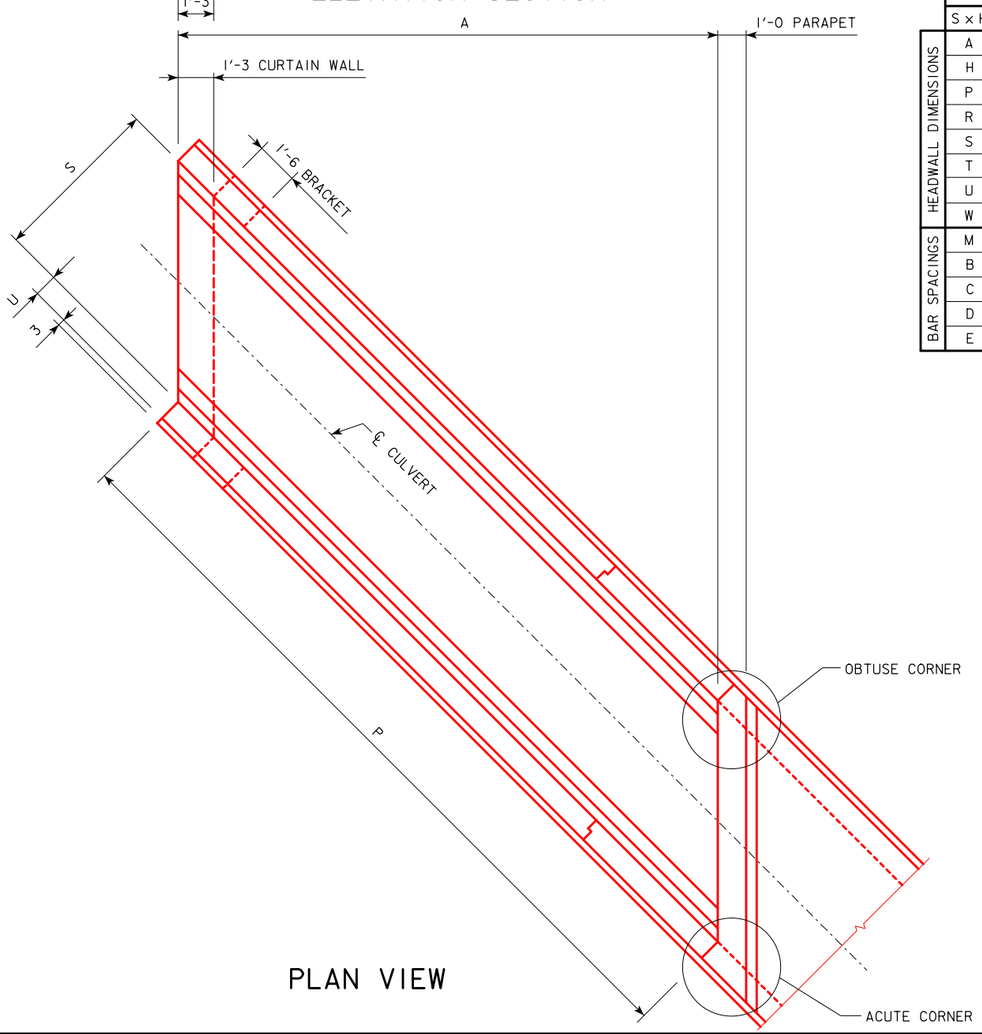

PLAN VIEW

DIMENSION TABLE

	S x H	12' x 12'	12' x 11'	12' x 10'	12' x 9'	12' x 8'	12' x 7'	12' x 6'	12' x 5'	12' x 4'	10' x 12'	10' x 11'	10' x 10'	10' x 9'	10' x 8'	10' x 7'	10' x 6'	10' x 5'	10' x 4'	S x H
HEADWALL DIMENSIONS	A	37'-0	34'-0	31'-0	28'-0	25'-0	22'-0	19'-0	16'-0	13'-0	37'-0	34'-0	31'-0	28'-0	25'-0	22'-0	19'-0	16'-0	13'-0	A
	H	12'-0	11'-0	10'-0	9'-0	8'-0	7'-0	6'-0	5'-0	4'-0	12'-0	11'-0	10'-0	9'-0	8'-0	7'-0	6'-0	5'-0	4'-0	H
	P	52'-3 15/16	48'-1	43'-10 1/8	39'-7 3/16	35'-4 5/16	31'-1 3/8	26'-10 1/2	22'-7 9/16	18'-4 5/8	52'-3 15/16	48'-1	43'-10 1/8	39'-7 3/16	35'-4 5/16	31'-1 3/8	26'-10 1/2	22'-7 9/16	18'-4 5/8	P
	R	53'-9 1/8	49'-4 13/16	45'-0 9/16	40'-8 1/4	36'-3 15/16	31'-11 5/8	27'-7 5/16	23'-3	18'-10 11/16	53'-9 1/8	49'-4 13/16	45'-0 9/16	40'-8 1/4	36'-3 15/16	31'-11 5/8	27'-7 5/16	23'-3	18'-10 11/16	R
	S	12'-0	12'-0	12'-0	12'-0	12'-0	12'-0	12'-0	12'-0	12'-0	10'-0	10'-0	10'-0	10'-0	10'-0	10'-0	10'-0	10'-0	10'-0	S
	T	1'-2	1'-2	1'-2	1'-2	1'-2	1'-2	1'-2	1'-2	1'-2	1'-1	1'-1	1'-1	1'-1	1'-1	1'-1	1'-1	1'-1	1'-1	T
	U	1'-0	1'-0	10	10	10	9	9	9	9	1'-0	1'-0	10	10	10	9	9	9	9	U
	W	5'-0	4'-9	4'-6	4'-3	4'-0	3'-9	3'-6	3'-6	3'-6	5'-0	4'-9	4'-6	4'-3	4'-0	3'-9	3'-6	3'-6	3'-6	W
BAR SPACINGS	M	20'-0	18'-0	17'-0	15'-0	13'-0	11'-0	10'-0	8'-0	6'-0	20'-0	18'-0	17'-0	15'-0	13'-0	11'-0	10'-0	8'-0	6'-0	M
	B	1'-0	1'-0	1'-0	1'-0	1'-0	1'-0	1'-0	1'-0	1'-0	1'-0	1'-0	1'-0	1'-0	1'-0	1'-0	1'-0	1'-0	1'-0	B
	C	9	9	9	9	1'-0	1'-0	1'-0	1'-0	1'-0	9	6	6	1'-0	1'-0	1'-0	1'-0	1'-0	1'-0	C
	D	6	1'-0	1'-0	1'-0	1'-0	1'-0	1'-0	1'-0	1'-0	6	6	6	1'-0	1'-0	1'-0	1'-0	1'-0	1'-0	D
	E	6	6	6	6	6	6	6	6	6	6	6	6	6	6	6	6	6	6	E

DIMENSION TABLE

	S x H	8' x 10'	8' x 9'	8' x 8'	8' x 7'	8' x 6'	8' x 5'	8' x 4'	6' x 8'	6' x 7'	6' x 6'	6' x 5'	6' x 4'	6' x 3'	5' x 6'	5' x 5'	5' x 4'	5' x 3'	-	S x H
HEADWALL DIMENSIONS	A	31'-0	28'-0	25'-0	22'-0	19'-0	16'-0	13'-0	25'-0	22'-0	19'-0	16'-0	13'-0	10'-0	19'-0	16'-0	13'-0	10'-0	-	A
	H	10'-0	9'-0	8'-0	7'-0	6'-0	5'-0	4'-0	8'-0	7'-0	6'-0	5'-0	4'-0	3'-0	6'-0	5'-0	4'-0	3'-0	-	H
	P	43'-10 1/8	39'-7 3/16	35-4 5/16	31'-1 3/8	26'-10 1/2	22'-7 9/16	18'-4 5/8	35'-4 5/16	31'-1 3/8	26'-10 1/2	22'-7 9/16	18'-4 5/8	14'-1 3/4	26'-10 1/2	22'-7 9/16	18'-4 5/8	14'-1 3/4	-	P
	R	45'-0 9/16	40'-8 1/4	36'-3 15/16	31'-11 5/8	27'-7 5/16	23'-3	18'-10 11/16	36'-3 15/16	31'-11 5/8	27'-7 5/16	23'-3	18'-10 11/16	14'-6 3/8	27'-7 5/16	23'-3	18'-10 11/16	14'-6 3/8	-	R
	S	8'-0	8'-0	8'-0	8'-0	8'-0	8'-0	8'-0	6'-0	6'-0	6'-0	6'-0	6'-0	6'-0	5'-0	5'-0	5'-0	5'-0	-	S
	T	11	11	11	11	11	11	11	11	11	11	11	11	11	11	11	11	11	-	T
	U	10	10	10	9	9	9	9	10	9	9	9	9	9	9	9	9	9	-	U
	W	4'-6	4'-3	4'-0	3'-9	3'-6	3'-6	3'-6	4'-0	3'-9	3'-6	3'-6	3'-6	3'-6	3'-6	3'-6	3'-6	3'-6	-	W
BAR SPACINGS	M	17'-0	15'-0	13'-0	11'-0	10'-0	8'-0	-	13'-0	11'-0	-	-	-	-	-	-	-	-	-	M
	B	1'-0	1'-0	1'-0	1'-0	1'-0	1'-0	1'-0	1'-0	1'-0	1'-0	1'-0	1'-0	1'-0	1'-0	1'-0	1'-0	1'-0	-	B
	C	9	9	1'-0	1'-0	1'-0	1'-0	1'-0	1'-0	1'-0	1'-0	1'-0	1'-0	1'-0	1'-0	1'-0	1'-0	1'-0	-	C
	D	6	1'-0	1'-0	1'-0	1'-0	1'-0	1'-0	1'-0	1'-0	1'-0	1'-0	1'-0	1'-0	1'-0	1'-0	1'-0	1'-0	-	D
	E	6	6	6	9	6	6	9	1'-0	1'-0	1'-0	1'-0	1'-0	1'-0	1'-0	1'-0	1'-0	1'-0	-	E

NOTES:

1. SEE DRAWING RCB-G1-12 AND RCB-G2-12 FOR GENERAL NOTES, SPECIFICATIONS, AND DESIGN STRESSES.
2. SEE DRAWING PWH 45-2-12 THRU 45-4-12 FOR LOCATION OF CERTAIN DIMENSIONS TABULATED.
3. SEE DRAWING PWH 45-5-12 THRU PWH 45-9-12 FOR HEADWALL NOTES.

LATEST REVISION DATE

APPROVED BY BRIDGE ENGINEER

IOWA DOT Highway Division

STANDARD DESIGN - SINGLE REINFORCED CONCRETE BOX CULVERTS

PARALLEL WING HEADWALLS

APRIL, 2012

DIMENSION TABLE
45° SKEW

PWH 45-1-12

ENGLISHLRFDSIGNEDSINGLECULVERTS.DGN - PWH 45-1-12 - THIS SHEET ISSUED 04-12.

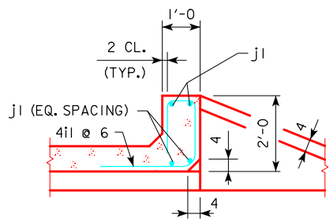

SECTION THRU PARAPET

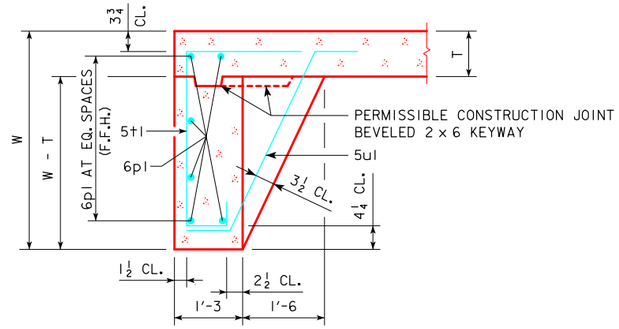

SECTION THRU CURTAIN WALL

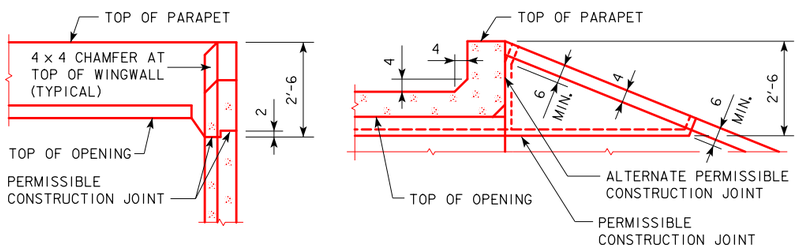

TOP OF WINGWALL DETAILS

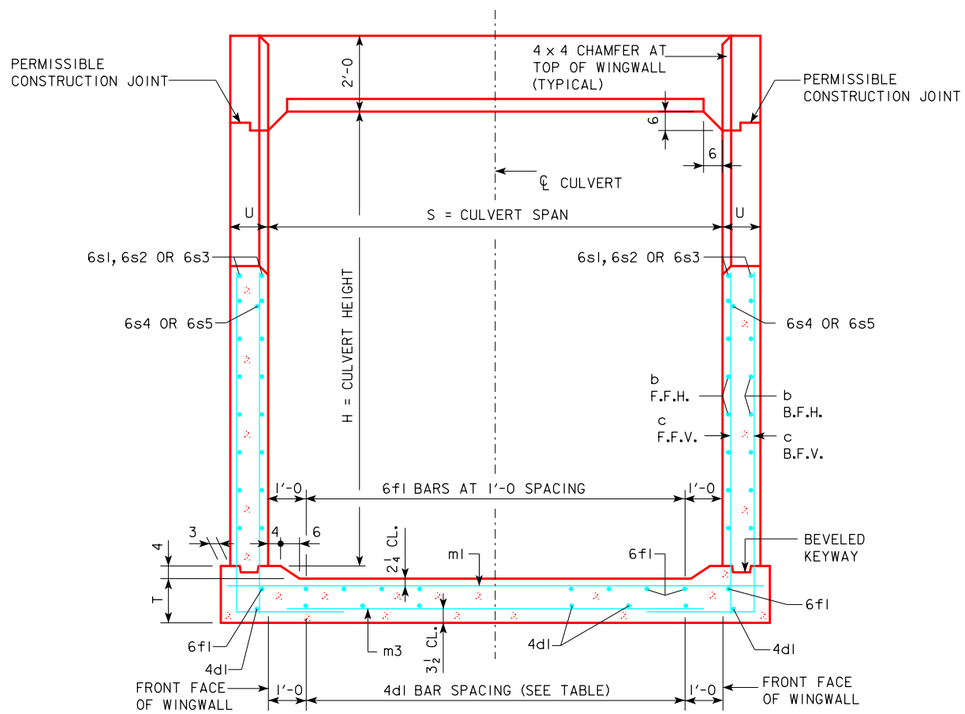

TYPICAL CROSS SECTION - THRU HEADWALL

4d1 BAR SPACING		
SPAN	SPACING	NO. OF BARS
5'-0	2 SPA. AT 1'-6	5
6'-0	3 SPA. AT 1'-4	6
8'-0	4 SPA. AT 1'-6	7
10'-0	6 SPA. AT 1'-4	9
12'-0	8 SPA. AT 1'-3	11

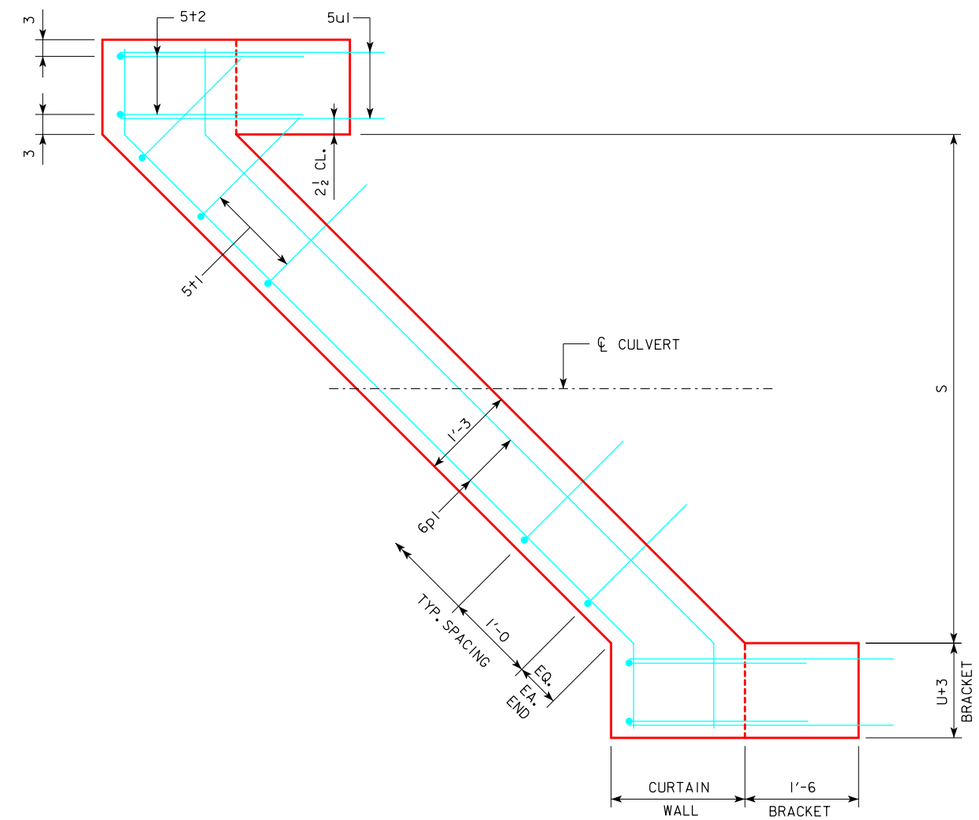

CURTAIN WALL DETAIL - PLAN VIEW

APRON IS NOT SHOWN

NOTES:

1. SEE DRAWING RCB-G1-11 AND RCB-G2-12 FOR GENERAL NOTES, SPECIFICATIONS, AND DESIGN STRESSES.
2. FOR DIMENSION TABLE SEE DRAWING PWH 45-1-12.

LATEST REVISION DATE

APPROVED BY BRIDGE ENGINEER

IOWA DOT Highway Division

STANDARD DESIGN - SINGLE REINFORCED CONCRETE BOX CULVERTS

PARALLEL WING HEADWALLS

APRIL, 2012

CROSS SECTION DETAILS 45° SKEW

PWH 45-2-12

ENGLISHLRFDSIGNEDSINGLECULVERTS.DGN - PWH 45-2-12 - THIS SHEET ISSUED 04-12.

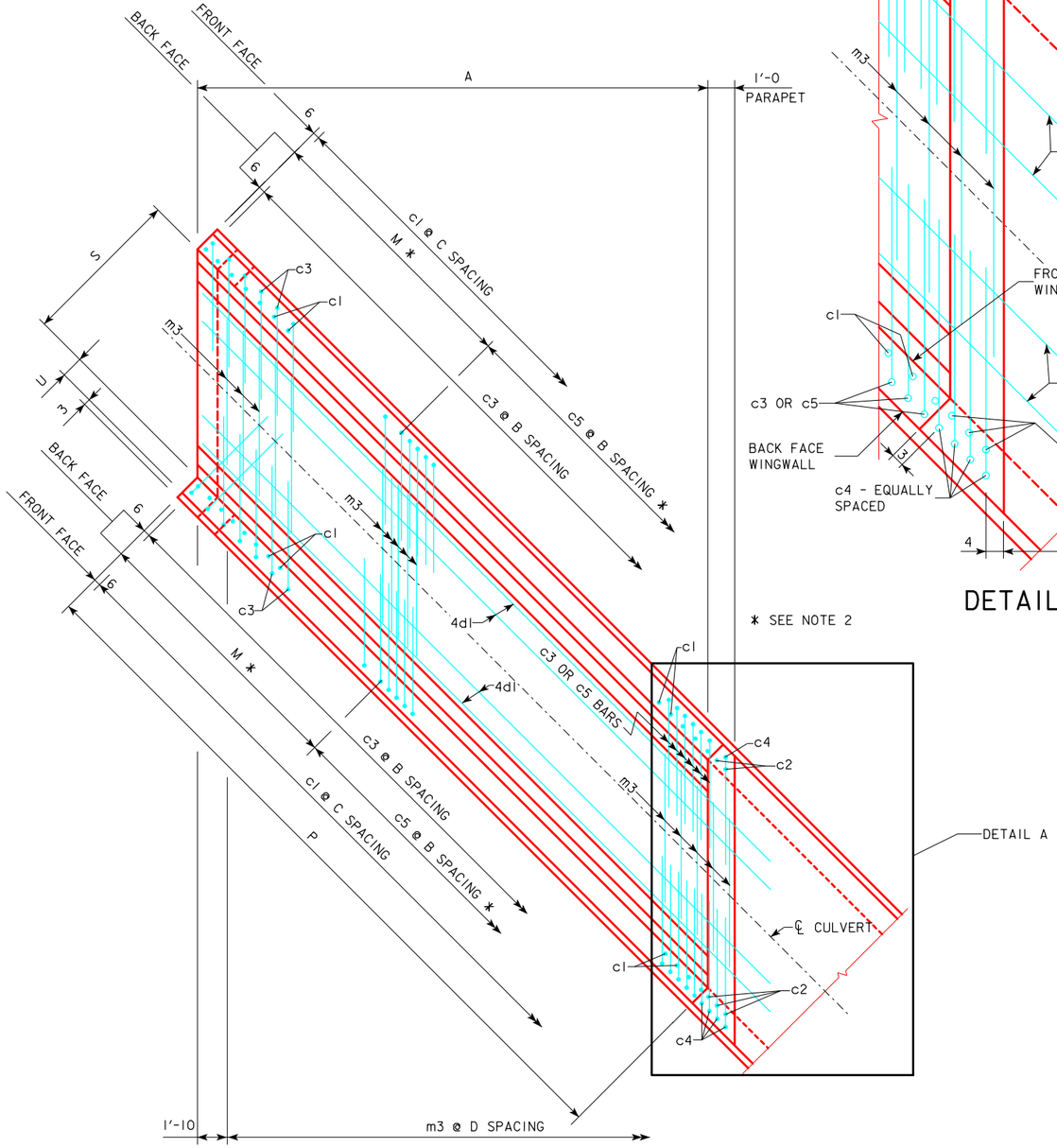

PLAN VIEW - BOTTOM APRON REINFORCING

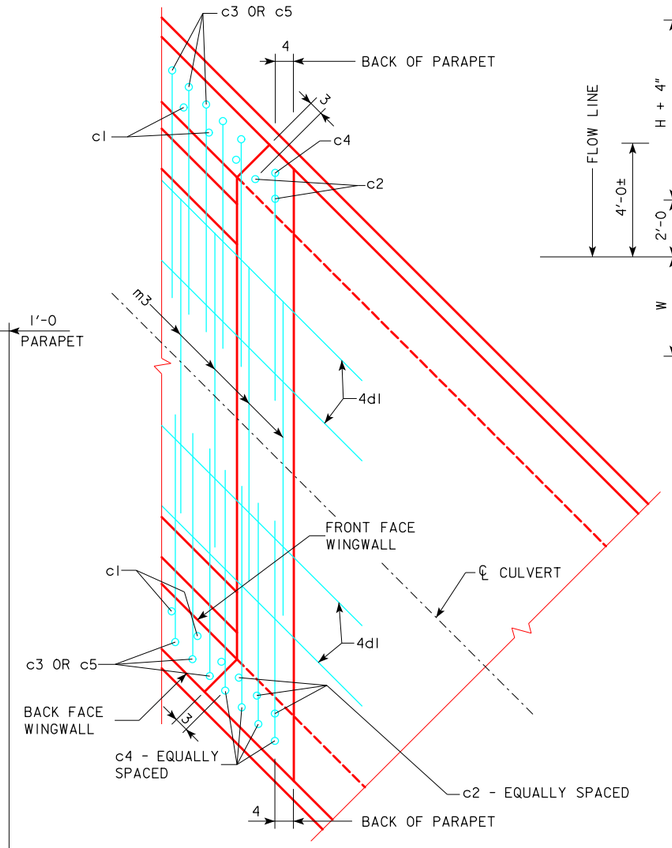

DETAIL A

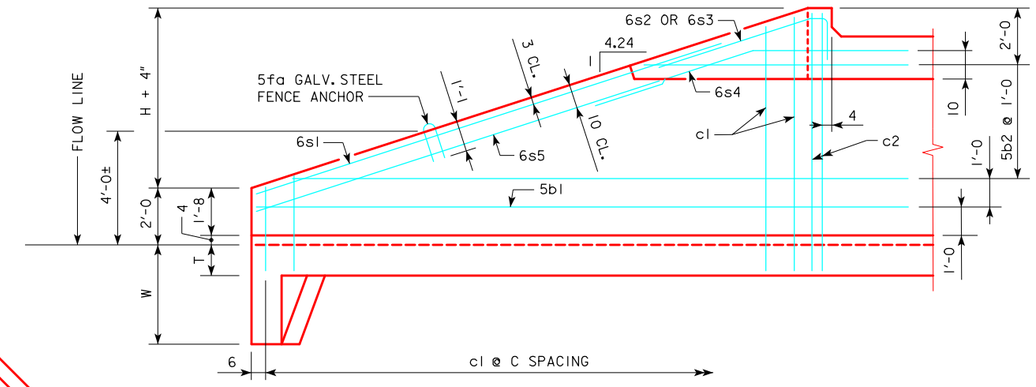

TYPICAL VIEW - FRONT FACE WINGWALL REINFORCING

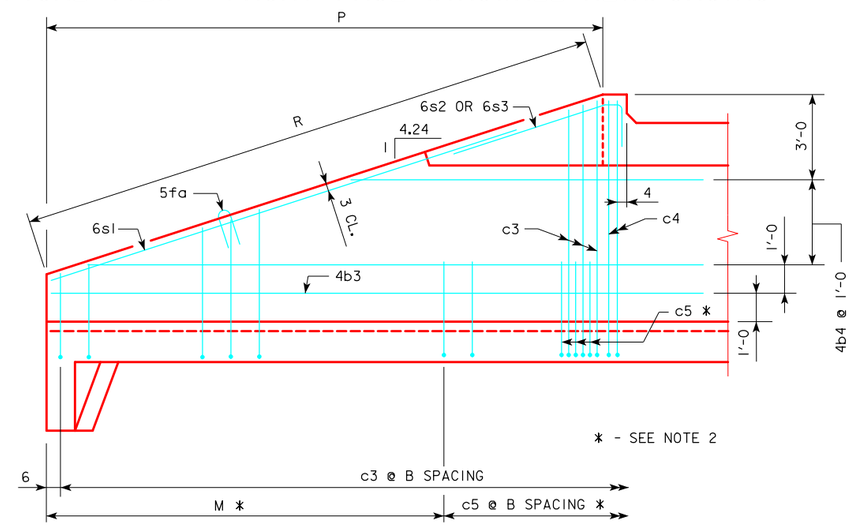

TYPICAL VIEW - BACK FACE WINGWALL REINFORCING

NOTES :

1. BAR SPACINGS AND POSITIONS SHOWN ARE SIMILAR FOR ALL SIZES OF HEADWALLS IN THIS STANDARD.
2. NOT APPLICABLE FOR THE FOLLOWING HEADWALL SIZES: 8x4, 6x6, 6x5, 6x4, 6x3, 5x6, 5x5, 5x4, AND 5x3.
3. FOR HEADWALL DIMENSIONS AND BAR SPACING SEE DRAWING PWH 45-1-12.
4. WINGWALL BARS CONSISTENTLY REFERENCED FROM END OF WING FOR ALL WINGWALLS.
5. APRON m3 BARS ARE TO BE CENTERED ON ℄ CULVERT.
6. B.F.V. (c4) AND F.F.V. (c2) BARS ARE APPROXIMATELY 4" FROM THE BACK OF PARAPET FOR ALL HEADWALLS.

07-2016
LATEST REVISION DATE

APPROVED BY BRIDGE ENGINEER

IOWA DOT Highway Division

STANDARD DESIGN - SINGLE REINFORCED CONCRETE BOX CULVERTS

PARALLEL WING HEADWALLS

APRIL, 2012

WINGWALL ELEVATIONS & BOTTOM APRON REINFORCING 45° SKEW

PWH 45-3-12

REVISED 07-2016 - CHANGED 10" VERTICAL DIMENSION FROM PERMISSIBLE WALL CONSTRUCTION JOINT TO 6s4 BAR. (DIMENSION WAS 1'-8 VERTICAL FROM TOP OF PARAPET TO 6s4 BAR.)
ENGLISHLRFDSIGNEDSINGLECULVERTS.DGN - PWH 45-3-12 - THIS SHEET ISSUED 04-12.

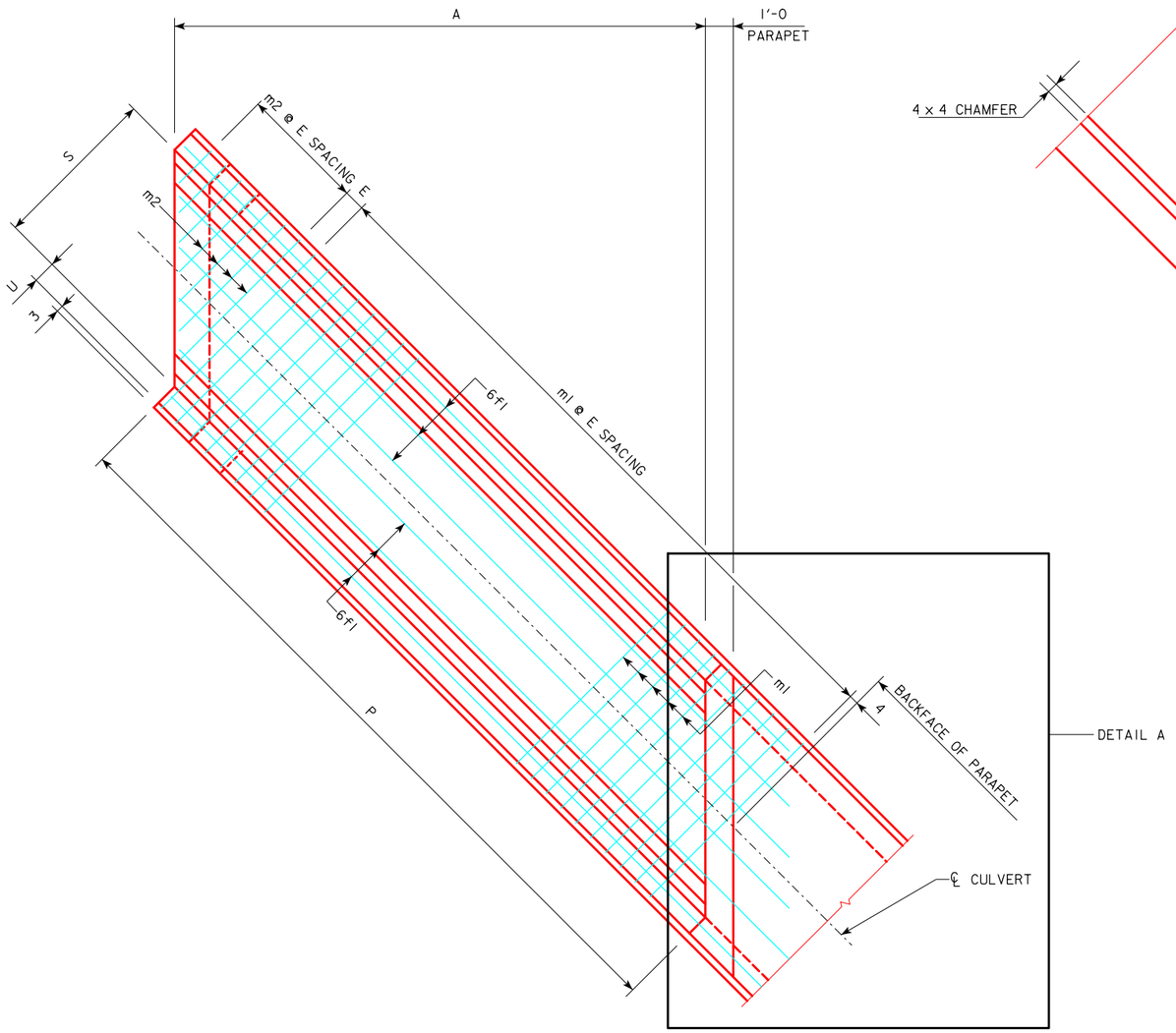

PLAN VIEW - TOP APRON REINFORCING

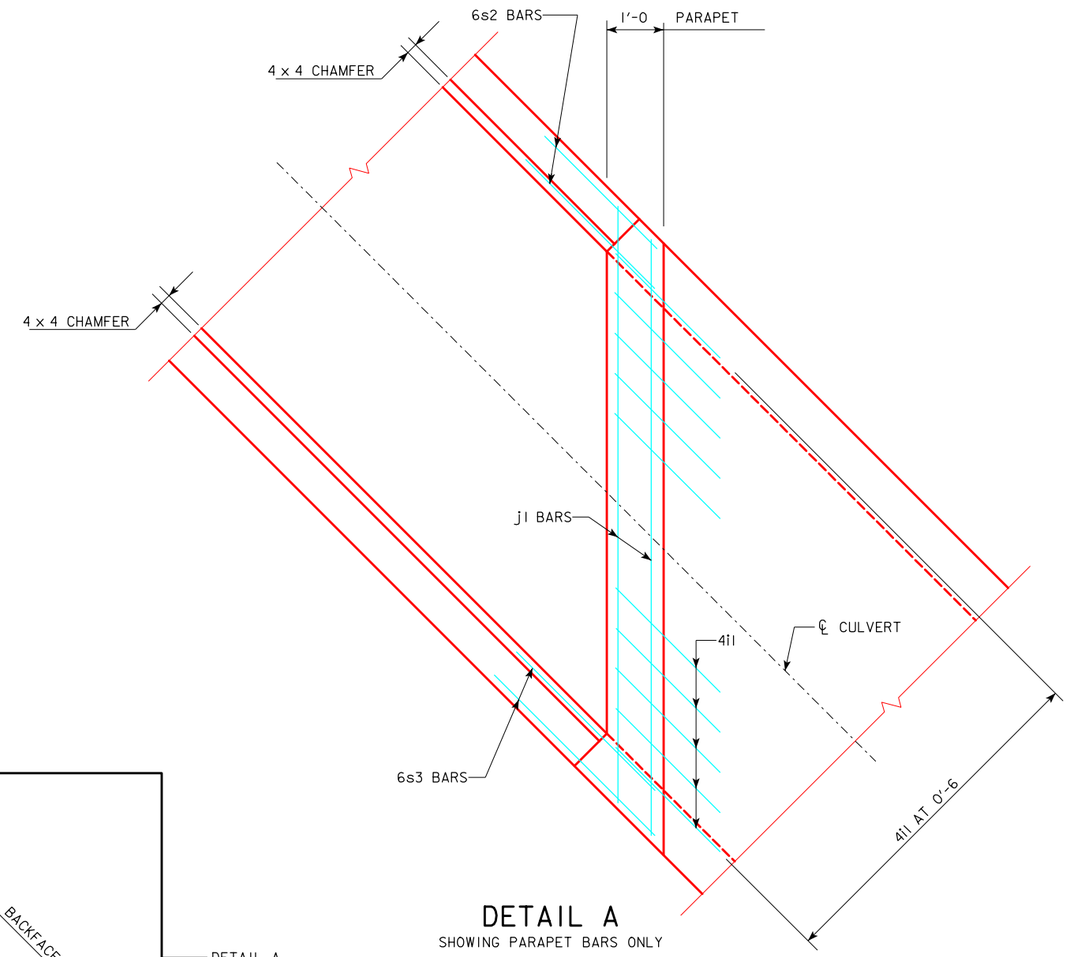

DETAIL A
SHOWING PARAPET BARS ONLY

NOTES :

1. BAR SPACINGS AND POSITIONS SHOWN ARE SIMILAR FOR ALL SIZES OF HEADWALLS IN THIS STANDARD.
2. FOR HEADWALL DIMENSIONS AND BAR SPACING SEE DRAWING PWH 45-1-12.
3. TOP TRANSVERSE APRON BARS ARE REFERENCED APPROXIMATELY 4" FROM THE BACK OF THE PARAPET FOR ALL HEADWALLS.

LATEST REVISION DATE

APPROVED BY BRIDGE ENGINEER

IOWA DOT Highway Division

STANDARD DESIGN - SINGLE REINFORCED CONCRETE BOX CULVERTS

PARALLEL WING HEADWALLS

APRIL, 2012

PARAPET REINFORCING & TOP APRON REINFORCING 45° SKEW

PWH 45-4-12

ENGLISHLRFDSIGNEDSINGLECULVERTS.DGN - PWH 45-4-12 - THIS SHEET ISSUED 04-12.

BILL OF REINFORCING FOR ONE HEADWALL 45° SKEW CULVERT SPAN x CULVERT HEIGHT

LOCATION	SHAPE	12′ x 12′				12′ x 11′				12′ x 10′			
		BAR	NO.	LENGTH	WT.	BAR	NO.	LENGTH	WT.	BAR	NO.	LENGTH	WT.
FENCE ANCHOR (GALV.)		5fa	2	2′-10	6	5fa	2	2′-10	6	5fa	2	2′-10	6
WINGWALL, F.F.H.		5b1	2	55′-10	121	5b1	2	51′-7	112	5b1	2	47′-4	103
WINGWALL, F.F.H.		5b2	22 VAR	2 EACH 12′-0:54′-5	779	5b2	20 VAR	2 EACH 11′-11:50′-2	660	5b2	18 VAR	2 EACH 11′-11:45′-11	551
WINGWALL, B.F.H.		4b3	2	56′-4	78	4b3	2	52′-1	72	4b3	2	47′-8	66
WINGWALL, B.F.H.		4b4	20 VAR	2 EACH 16′-9:54′-11	489	4b4	18 VAR	2 EACH 16′-9:50′-8	413	4b4	16 VAR	2 EACH 16′-7:46′-3	341
WINGWALL, F.F.V.		6c1	140 VAR	2 EACH 2′-9:15′-0	1866	5c1	128 VAR	2 EACH 2′-9:13′-11	1113	5c1	116 VAR	2 EACH 2′-8:12′-9	933
WINGWALL, F.F.V. (O)		6c2	2	15′-0	45	5c2	2	14′-0	29	5c2	2	13′-0	27
WINGWALL, F.F.V. (A)		6c2	3	15′-0	68	5c2	3	14′-0	44	5c2	3	13′-0	41
WINGWALL, B.F.V.		6c3	104 VAR	2 EACH 6′-9:18′-10	1998	6c3	96 VAR	2 EACH 6′-9:17′-10	1772	6c3	88 VAR	2 EACH 6′-9:16′-11	1564
WINGWALL, B.F.V. (O)		6c4	1	19′-0	29	6c4	1	18′-0	27	6c4	1	17′-0	26
WINGWALL, B.F.V. (A)		6c4	4	19′-0	114	6c4	4	18′-0	108	6c4	4	17′-0	102
WINGWALL, B.F.V.		6c5	66	9′-0	892	6c5	62	9′-0	838	6c5	54	9′-0	730
APRON, LONGIT., BOTT.		4d1	11	55′-7	423	4d1	11	51′-4	392	4d1	11	47′-1	361
APRON, LONGIT., TOP		6f1	13	55′-7	1124	6f1	13	51′-4	1041	6f1	13	47′-1	958
PARAPET, VERTICAL		4i1	34	7′-10	178	4i1	34	7′-10	178	4i1	34	7′-10	178
PARAPET, HORIZ.		8j1	4	19′-4	206	8j1	4	19′-4	206	8j1	4	18′-10	201
APRON, TRANS., TOP		6m1	95	14′-2	2021	6m1	87	14′-2	1851	6m1	78	13′-10	1621
APRON, TRANS., TOP		6m2	22 VAR	2′-4:12′-10	251	6m2	22 VAR	2′-1:12′-7	242	6m2	22 VAR	2′-2:12′-8	245
APRON, TRANS., BOTT.		5m3	73	15′-7	1186	6m3	34	16′-5	838	6m3	31	15′-11	741
CURTAIN, HORIZ.		6p1	6	19′-2	173	6p1	6	19′-2	173	6p1	6	18′-10	170
WING SLOPE, BOTH F.		6s1	4	48′-1	301	6s1	4	43′-8	274	6s1	4	39′-4	236
WING SLOPE, BOTH F. (O)		6s2	2	9′-8	29	6s2	2	9′-7	29	6s2	2	9′-9	29
WING SLOPE, BOTH F. (A)		6s3	2	10′-7	32	6s3	2	10′-6	32	6s3	2	10′-6	32
WING SLOPE, F. F.		6s4	2	13′-8	41	6s4	2	13′-8	41	6s4	2	13′-8	41
WING SLOPE, F. F.		6s5	2	46′-1	144	6s5	2	41′-9	131	6s5	2	37′-4	112
CURTAIN, VERT.		5t1	17	7′-11	140	5t1	17	7′-8	136	5t1	17	7′-5	132
CURTAIN, VERT., ENDS		5t2	4	8′-4	35	5t2	4	8′-1	34	5t2	4	7′-10	33
BRACKET, VERT.		5u1	4	6′-8	28	5u1	4	6′-5	27	5u1	4	6′-2	26
ESTIMATED QUANTITIES ONE HEADWALL	REINF. STEEL	12,797 LBS.				10,819 LBS.				9606 LBS.			
	CONCRETE	PARAPET Δ	2.3	72.9 CU.YD.		PARAPET Δ	2.3	65.4 CU.YD.		PARAPET Δ	2.2	53.5 CU.YD.	
		WINGWALLS	30.8			WINGWALLS	26.4			WINGWALLS	18.6		
		APRON	39.8			APRON	36.7			APRON	32.7		

LOCATION	SHAPE	12′ x 9′				12′ x 8′				12′ x 7′			
		BAR	NO.	LENGTH	WT.	BAR	NO.	LENGTH	WT.	BAR	NO.	LENGTH	WT.
FENCE ANCHOR (GALV.)		5fa	2	2′-10	6	5fa	2	2′-10	6	5fa	2	2′-10	6
WINGWALL, F.F.H.		5b1	2	43′-1	94	5b1	2	38′-10	81	5b1	2	34′-7	72
WINGWALL, F.F.H.		5b2	16 VAR	2 EACH 11′-11:41′-8	451	5b2	14 VAR	2 EACH 11′-11:37′-5	360	5b2	12 VAR	2 EACH 11′-11:33′-2	282
WINGWALL, B.F.H.		4b3	2	43′-5	61	4b3	2	39′-2	52	4b3	2	34′-11	47
WINGWALL, B.F.H.		4b4	14 VAR	2 EACH 16′-7:37′-10	277	4b4	12 VAR	2 EACH 16′-6:33′-6	218	4b4	10 VAR	2 EACH 16′-6:33′-6	167
WINGWALL, F.F.V.		5c1	106 VAR	2 EACH 2′-8:11′-11	806	5c1	70 VAR	2 EACH 2′-8:10′-9	490	4c1	62 VAR	2 EACH 2′-8:9′-9	257
WINGWALL, F.F.V. (O)		5c2	2	12′-0	25	5c2	2	11′-0	23	4c2	2	10′-0	13
WINGWALL, F.F.V. (A)		5c2	3	12′-0	38	5c2	3	11′-0	34	4c2	3	10′-0	20
WINGWALL, B.F.V.		6c3	80 VAR	2 EACH 6′-9:16′-0	1367	6c3	70 VAR	2 EACH 6′-9:14′-10	1135	6c3	62 VAR	2 EACH 6′-9:13′-10	958
WINGWALL, B.F.V. (O)		6c4	1	16′-0	24	6c4	1	15′-0	23	6c4	1	14′-0	21
WINGWALL, B.F.V. (A)		6c4	4	16′-0	96	6c4	4	15′-0	90	6c4	4	14′-0	84
WINGWALL, B.F.V.		6c5	50	9′-0	676	6c5	46	9′-0	622	6c5	42	9′-0	568
APRON, LONGIT., BOTT.		4d1	11	42′-10	329	4d1	11	38′-7	284	4d1	11	34′-4	252
APRON, LONGIT., TOP		6f1	13	42′-10	875	6f1	13	38′-7	753	6f1	13	34′-4	670
PARAPET, VERTICAL		4i1	34	7′-10	178	4i1	34	7′-10	178	4i1	34	7′-10	178
PARAPET, HORIZ.		8j1	4	18′-10	201	8j1	4	18′-10	201	8j1	4	18′-7	198
APRON, TRANS., TOP		6m1	70	13′-10	1454	6m1	61	13′-10	1267	6m1	53	13′-8	1088
APRON, TRANS., TOP		6m2	21 VAR	2′-5:12′-5	234	6m2	22 VAR	2′-2:12′-8	245	6m2	21 VAR	2′-4:12′-4	231
APRON, TRANS., BOTT.		5m3	28	15′-1	440	5m3	25	15′-1	393	4m3	22	14′-0	206
CURTAIN, HORIZ.		6p1	6	18′-10	170	6p1	6	18′-10	170	6p1	5	18′-8	140
WING SLOPE, BOTH F.		6s1	4	35′-0	210	6s1	4	30′-8	184	6s1	4	26′-3	158
WING SLOPE, BOTH F. (O)		6s2	2	9′-9	29	6s2	2	9′-9	29	6s2	2	9′-9	29
WING SLOPE, BOTH F. (A)		6s3	2	10′-6	32	6s3	2	10′-6	32	6s3	2	10′-5	31
WING SLOPE, F. F.		6s4	2	13′-8	41	6s4	2	13′-8	41	6s4	2	13′-8	41
WING SLOPE, F. F.		6s5	2	33′-0	99	6s5	2	28′-8	86	6s5	2	24′-4	73
CURTAIN, VERT.		5t1	17	7′-2	127	5t1	17	6′-11	123	5t1	17	6′-8	118
CURTAIN, VERT., ENDS		5t2	4	7′-7	32	5t2	4	7′-4	31	5t2	4	7′-1	30
BRACKET, VERT.		5u1	4	6′-0	25	5u1	4	5′-9	24	5u1	4	5′-7	23
ESTIMATED QUANTITIES ONE HEADWALL	REINF. STEEL	8397 LBS.				7175 LBS.				5961 LBS.			
	CONCRETE	PARAPET Δ	2.2	47.4 CU.YD.		PARAPET Δ	2.2	41.6 CU.YD.		PARAPET Δ	2.1	34.6 CU.YD.	
		WINGWALLS	15.5			WINGWALLS	12.7			WINGWALLS	9.1		
		APRON	29.7			APRON	26.7			APRON	23.4		

LOCATION	SHAPE	12′ x 6′				12′ x 5′				12′ x 4′			
		BAR	NO.	LENGTH	WT.	BAR	NO.	LENGTH	WT.	BAR	NO.	LENGTH	WT.
FENCE ANCHOR (GALV.)		5fa	2	2′-10	6	5fa	2	2′-10	6	5fa	2	2′-10	6
WINGWALL, F.F.H.		5b1	2	30′-4	63	5b1	2	26′-1	54	5b1	2	21′-10	46
WINGWALL, F.F.H.		5b2	10 VAR	2 EACH 11′-11:28′-11	213	5b2	8 VAR	2 EACH 11′-11:24′-8	153	5b2	6 VAR	2 EACH 11′-11:20′-5	101
WINGWALL, B.F.H.		4b3	2	30′-8	41	4b3	2	26′-5	35	4b3	2	22′-2	30
WINGWALL, B.F.H.		4b4	8 VAR	2 EACH 16′-6:29′-3	122	4b4	6 VAR	2 EACH 16′-6:25′-0	83	4b4	4 VAR	2 EACH 16′-6: 20′-9	50
WINGWALL, F.F.V.		4c1	54 VAR	2 EACH 2′-8:8′-10	207	4c1	46 VAR	2 EACH 2′-8:7′-11	163	4c1	36 VAR	2 EACH 2′-8:6′-8	112
WINGWALL, F.F.V. (O)		4c2	2	9′-0	12	4c2	2	8′-0	11	4c2	2	7′-0	9
WINGWALL, F.F.V. (A)		4c2	3	9′-0	18	4c2	3	8′-0	16	4c2	3	7′-0	14
WINGWALL, B.F.V.		5c3	54 VAR	2 EACH 6′-9:12′-11	554	5c3	46 VAR	2 EACH 6′-9:12′-0	450	5c3	36 VAR	2 EACH 6′-9:10′-9	329
WINGWALL, B.F.V. (O)		5c4	1	13′-0	14	5c4	1	12′-0	13	5c4	1	11′-0	11
WINGWALL, B.F.V. (A)		5c4	4	13′-0	54	5c4	4	12′-0	50	5c4	4	11′-0	46
WINGWALL, B.F.V.		5c5	34	9′-0	319	5c5	30	8′-7	269	5c5	26	8′-1	219
APRON, LONGIT., BOTT.		4d1	11	30′-1	221	4d1	11	25′-10	190	4d1	11	21′-8	159
APRON, LONGIT., TOP		6f1	13	30′-1	587	6f1	13	25′-10	504	6f1	13	21′-8	423
PARAPET, VERTICAL		4i1	34	7′-10	178	4i1	34	7′-10	178	4i1	34	7′-10	178
PARAPET, HORIZ.		8j1	4	18′-7	198	8j1	4	18′-7	198	8j1	4	18′-7	198
APRON, TRANS., TOP		6m1	44	13′-8	903	6m1	36	13′-8	739	6m1	27	13′-8	554
APRON, TRANS., TOP		6m2	22 VAR	2′-1:12′-7	242	6m2	21 VAR	2′-4:12′-4	231	6m2	22 VAR	2′-2:12′-8	245
APRON, TRANS., BOTT.		4m3	19	14′-0	178	4m3	16	14′-0	150	4m3	13	14′-0	122
CURTAIN, HORIZ.		6p1	5	18′-8	140	6p1	5	18′-8	140	6p1	5	18′-8	140
WING SLOPE, BOTH F.		6s1	4	21′-11	132	6s1	4	17′-7	106	6s1	4	13′-2	79
WING SLOPE, BOTH F. (O)		6s2	2	9′-9	29	6s2	2	9′-9	29	6s2	2	9′-9	29
WING SLOPE, BOTH F. (A)		6s3	2	10′-5	31	6s3	2	10′-5	31	6s3	2	10′-5	31
WING SLOPE, F. F.		6s4	2	13′-8	41	6s4	2	13′-8	41	6s4	2	13′-8	41
WING SLOPE, F. F.		6s5	2	19′-11	60	6s5	2	15′-7	47	6s5	2	11′-3	34
CURTAIN, VERT.		5t1	17	6′-5	114	5t1	17	6′-5	114	5t1	17	6′-5	114
CURTAIN, VERT., ENDS		5t2	4	6′-10	29	5t2	4	6′-10	29	5t2	4	6′-10	29
BRACKET, VERT.		5u1	4	5′-4	22	5u1	4	5′-4	22	5u1	4	5′-4	22
ESTIMATED QUANTITIES ONE HEADWALL	REINF. STEEL	4728 LBS.				4052 LBS.				3371 LBS.			
	CONCRETE	PARAPET Δ	2.1	29.5 CU.YD.		PARAPET Δ	2.1	25.0 CU.YD.		PARAPET Δ	2.1	20.7 CU.YD.	
		WINGWALLS	7.0			WINGWALLS	5.2			WINGWALLS	3.6		
		APRON	20.4			APRON	17.7			APRON	15.0		

Δ INCLUDES TOP OF WINGWALL QUANTITIES.

NOTE: WEIGHT OF BARS OVER 40′-0 LONG INCLUDE AN ALLOWANCE OF 2′-0 FOR LAP.

(A) - INDICATES BAR LOCATED AT ACUTE CORNER.
(O) - INDICATES BAR LOCATED AT OBTUSE CORNER.
REFER TO SHEET PWH 45-1-12 FOR ACUTE AND OBTUSE CORNER LOCATIONS.

BENT BAR DETAILS

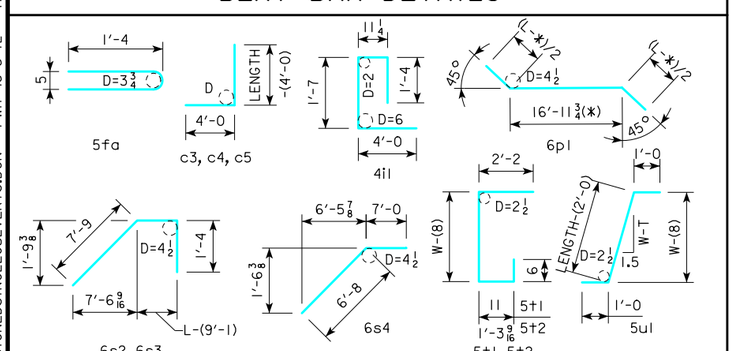

NOTE: ALL DIMENSIONS ARE OUT TO OUT
D = PIN DIAMETER
SEE TABLE AT RIGHT FOR PIN DIAMETER "D" OF c BARS

c BAR PIN DIAMETER	
BAR SIZE	D
4	3
5	3¾
6	4½

HEADWALL NOTES:

THIS HEADWALL IS BASED ON A 3:1 SLOPE NORMAL TO CENTERLINE OF ROADWAY.

THE SIDES OF THE FOOTING ARE TO BE FORMED TO INSURE CORRECT LINE AND GRADE.

ALL EXPOSED CORNERS OF 90° OR SHARPER ARE TO BE FILLETED WITH A ¾" DRESSED AND BEVELED STRIP.

ALL REINFORCING IS TO BE SECURELY WIRED IN PLACE BEFORE THE CONCRETE IS POURED. ALL SLAB AND FLOOR REINFORCING STEEL IS TO BE SUPPORTED BY BAR CHAIRS AT INTERVALS OF NOT MORE THAN 3′-0 IN EITHER DIRECTION AS OUTLINED IN THE STANDARD SPECIFICATIONS.

CLEAR DISTANCE FROM FACE OF CONCRETE TO NEAR REINFORCING BAR IS TO BE 2" UNLESS OTHERWISE NOTED OR SHOWN. CLEARANCE TO THE BOTTOM ENDS OF VERTICAL BARS SHALL BE 3 INCHES.

CONCRETE QUANTITIES ARE ESTIMATED FROM BACK OF PARAPET.

HORIZONTAL TAILS OF BARS "b" & "s" ESTIMATED TO EXTEND 2′-0 BEYOND BACK OF PARAPET (INTO END OF BARREL). LONGITUDINAL BARS "4d1" AND "6f1" ESTIMATED TO PROJECT INTO END SECTION OF BARREL A MINIMUM OF 2′-0 BEYOND BACK OF PARAPET. THE "LENGTH" COLUMN REFLECTS TOTAL NUMBER OF FEET NECESSARY TO MEET THESE REQUIREMENTS.

07-2016
LATEST REVISION DATE

APPROVED BY BRIDGE ENGINEER

IOWA DOT Highway Division

STANDARD DESIGN - SINGLE REINFORCED CONCRETE BOX CULVERTS

PARALLEL WING HEADWALLS

APRIL, 2012

QUANTITY TABULATION
12′-0 SPAN
45° SKEW

PWH 45-5-12

REVISED 07-2016 - CHANGED FENCE ANCHOR BAR (5fa) FROM 3′-1 TO 2′-10.
ENGLISHLRFDSIGNEDSINGLECULVERTS.DGN - PWH 45-5-12 - THIS SHEET ISSUED 04-12.

BILL OF REINFORCING FOR ONE HEADWALL 45° SKEW CULVERT SPAN x CULVERT HEIGHT

LOCATION	SHAPE	10′ x 12′				10′ x 11″				10′ x 10′			
		BAR	NO.	LENGTH	WT.	BAR	NO.	LENGTH	WT.	BAR	NO.	LENGTH	WT.
FENCE ANCHOR (GALV.)		5fa	2	2′-10	6	5fa	2	2′-10	6	5fa	2	2′-10	6
WINGWALL, F.F.H.		5b1	2	55′-10	121	5b1	2	51′-7	112	5b1	2	47′-4	103
WINGWALL, F.F.H.		5b2	22 VAR	2 EACH 12′-0:54′-5	779	5b2	20 VAR	2 EACH 11′-11:50′-2	660	5b2	18 VAR	2 EACH 11′-11:45′-11	551
WINGWALL, B.F.H.		4b3	2	56′-4	78	4b3	2	52′-1	72	4b3	2	47′-8	66
WINGWALL, B.F.H.		4b4	20 VAR	2 EACH 16′-9:54′-11	489	4b4	18 VAR	2 EACH 16′-9:50′-8	413	4b4	16 VAR	2 EACH 16′-7:46′-3	341
WINGWALL, F.F.V.		6c1	140 VAR	2 EACH 2′-8:14′-10	1840	5c1	192 VAR	2 EACH 2′-7:13′-10	1644	5c1	174 VAR	2 EACH 2′-7:12′-9	1391
WINGWALL, F.F.V. (O)		6c2	2	14′-11	45	5c2	2	13′-11	29	5c2	2	12′-11	27
WINGWALL, F.F.V. (A)		6c2	3	14′-11	67	5c2	3	13′-11	44	5c2	3	12′-11	40
WINGWALL, B.F.V.		6c3	104 VAR	2 EACH 6′-8:18′-9	1985	6c3	96 VAR	2 EACH 6′-8:17′-9	1760	6c3	88 VAR	2 EACH 6′-8:16′-10	1533
WINGWALL, B.F.V. (O)		6c4	1	18′-11	28	6c4	1	17′-11	27	6c4	1	16′-11	25
WINGWALL, B.F.V. (A)		6c4	4	18′-11	114	6c4	4	17′-11	108	6c4	4	16′-11	102
WINGWALL, B.F.V.		6c5	66	9′-0	892	6c5	62	9′-0	838	6c5	54	9′-0	730
APRON, LONGIT., BOTT.		4d1	9	55′-7	346	4d1	9	51′-4	321	4d1	9	47′-1	295
APRON, LONGIT., TOP		6f1	11	55′-7	951	6f1	11	51′-4	881	6f1	11	47′-1	811
PARAPET, VERTICAL		4i1	29	7′-10	152	4i1	29	7′-10	152	4i1	29	7′-10	152
PARAPET, HORIZ.		8j1	4	16′-6	176	8j1	4	16′-6	176	8j1	4	16′-0	171
APRON, TRANS., TOP		5m1	97	12′-2	1231	5m1	89	12′-2	1129	5m1	80	11′-10	987
APRON, TRANS., TOP		5m2	18 VAR	2′-4:10′-10	124	5m2	18 VAR	2′-1:10′-7	119	5m2	18 VAR	2′-2:10′-8	120
APRON, TRANS., BOTT.		5m3	73	12′-9	971	5m3	67	12′-9	891	5m3	61	12′-3	779
CURTAIN, HORIZ.		6p1	6	16′-4	147	6p1	6	16′-4	147	6p1	6	16′-0	144
WING SLOPE, BOTH F.		6s1	4	48′-1	301	6s1	4	43′-8	274	6s1	4	39′-4	236
WING SLOPE, BOTH F. (O)		6s2	2	9′-8	29	6s2	2	9′-7	29	6s2	2	9′-9	29
WING SLOPE, BOTH F. (A)		6s3	2	10′-7	32	6s3	2	10′-6	32	6s3	2	10′-6	32
WING SLOPE, F. F.		6s4	2	13′-8	41	6s4	2	13′-8	41	6s4	2	13′-8	41
WING SLOPE, F. F.		6s5	2	46′-1	144	6s5	2	41′-9	131	6s5	2	37′-4	112
CURTAIN, VERT.		5t1	15	7′-11	124	5t1	15	7′-8	120	5t1	15	7′-5	116
CURTAIN, VERT., ENDS		5t2	4	8′-4	35	5t2	4	8′-1	34	5t2	4	7′-10	33
BRACKET, VERT.		5u1	4	6′-8	28	5u1	4	6′-5	27	5u1	4	6′-2	26
ESTIMATED QUANTITIES ONE HEADWALL	REINF. STEEL	11,276 LBS.				10,217 LBS.				9019 LBS.			
	CONCRETE	PARAPET Δ	2.1	65.5 CU.YD.		PARAPET Δ	2.1	58.6 CU.YD.		PARAPET Δ	1.9	47.3 CU.YD.	
		WINGWALLS	30.8			WINGWALLS	26.4			WINGWALLS	18.6		
		APRON	32.6			APRON	30.1			APRON	26.8		

LOCATION	10′ x 9′				10′ x 8′				10′ x 7′			
	BAR	NO.	LENGTH	WT.	BAR	NO.	LENGTH	WT.	BAR	NO.	LENGTH	WT.
FENCE ANCHOR (GALV.)	5fa	2	2′-10	6	5fa	2	2′-10	6	5fa	2	2′-10	6
WINGWALL, F.F.H.	5b1	2	43′-1	94	5b1	2	38′-10	81	5b1	2	34′-7	72
WINGWALL, F.F.H.	5b2	16 VAR	2 EACH 12′-0:41′-8	452	5b2	14 VAR	2 EACH 11′-11:37′-5	360	5b2	12 VAR	2 EACH 11′-11:33′-2	282
WINGWALL, B.F.H.	4b3	2	43′-5	61	4b3	2	39′-3	52	4b3	2	34′-11	47
WINGWALL, B.F.H.	4b4	14 VAR	2 EACH 16′-7:42′-0	277	4b4	12 VAR	2 EACH 16′-7:37′-10	218	4b4	10 VAR	2 EACH 16′-6:33′-6	167
WINGWALL, F.F.V.	6c1	80 VAR	2 EACH 2′-8:11′-10	871	5c1	70 VAR	2 EACH 2′-7:10′-8	484	5c1	62 VAR	2 EACH 2′-7:9′-8	396
WINGWALL, F.F.V. (O)	6c2	2	11′-11	36	5c2	2	10′-11	23	5c2	2	9′-11	21
WINGWALL, F.F.V. (A)	6c2	3	11′-11	54	5c2	3	10′-11	34	5c2	3	9′-11	31
WINGWALL, B.F.V.	6c3	80 VAR	2 EACH 6′-8:15′-11	1357	5c3	70 VAR	2 EACH 6′-8:14′-9	782	5c3	62 VAR	2 EACH 6′-8:13′-9	660
WINGWALL, B.F.V. (O)	6c4	1	15′-11	24	5c4	1	14′-11	16	5c4	1	13′-11	15
WINGWALL, B.F.V. (A)	6c4	4	15′-11	96	5c4	4	14′-11	62	5c4	4	13′-11	58
WINGWALL, B.F.V.	6c5	50	9′-0	676	5c5	46	9′-0	432	5c5	42	9′-0	394
APRON, LONGIT., BOTT.	4d1	9	42′-10	270	4d1	9	38′-7	232	4d1	9	34′-4	206
APRON, LONGIT., TOP	6f1	11	42′-10	741	6f1	11	38′-7	637	6f1	11	34′-4	567
PARAPET, VERTICAL	4i1	29	7′-10	152	4i1	29	7′-10	152	4i1	29	7′-10	152
PARAPET, HORIZ.	8j1	4	16′-0	171	8j1	4	16′-0	171	8j1	4	15′-10	169
APRON, TRANS., TOP	5m1	72	11′-10	889	5m1	63	11′-10	778	5m1	55	11′-8	669
APRON, TRANS., TOP	5m2	17 VAR	2′-5:10′-5	114	5m2	18 VAR	2′-2:10′-8	120	5m2	17 VAR	2′-4:10′-4	112
APRON, TRANS., BOTT.	6m3	28	13′-2	554	5m3	25	12′-3	319	4m3	22	11′-2	164
CURTAIN, HORIZ.	6p1	6	16′-0	144	6p1	6	16′-0	144	6p1	5	15′-10	119
WING SLOPE, BOTH F.	6s1	4	35′-0	210	6s1	4	30′-8	184	6s1	4	26′-3	158
WING SLOPE, BOTH F. (O)	6s2	2	9′-10	30	6s2	2	9′-9	29	6s2	2	9′-10	30
WING SLOPE, BOTH F. (A)	6s3	2	10′-7	32	6s3	2	10′-6	32	6s3	2	10′-6	32
WING SLOPE, F. F.	6s4	2	13′-8	41	6s4	2	13′-8	41	6s4	2	13′-8	41
WING SLOPE, F. F.	6s5	2	33′-0	99	6s5	2	28′-8	86	6s5	2	24′-4	73
CURTAIN, VERT.	5t1	15	7′-2	112	5t1	15	6′-11	108	5t1	15	6′-8	104
CURTAIN, VERT., ENDS	5t2	4	7′-7	32	5t2	4	7′-4	31	5t2	4	7′-1	30
BRACKET, VERT.	5u1	4	6′-0	25	5u1	4	5′-9	24	5u1	4	5′-6	23
ESTIMATED QUANTITIES ONE HEADWALL	7620 LBS.				5638 LBS.				4798 LBS.			
	PARAPET Δ	1.9	41.7 CU.YD.		PARAPET Δ	1.9	36.5 CU.YD.		PARAPET Δ	1.9	30.1 CU.YD.	
	WINGWALLS	15.5			WINGWALLS	12.7			WINGWALLS	9.1		
	APRON	24.3			APRON	21.9			APRON	19.1		

LOCATION	10′ x 6′				10′ x 5′				10′ x 4′			
	BAR	NO.	LENGTH	WT.	BAR	NO.	LENGTH	WT.	BAR	NO.	LENGTH	WT.
FENCE ANCHOR (GALV.)	5fa	2	2′-10	6	5fa	2	2′-10	6	5fa	2	2′-10	6
WINGWALL, F.F.H.	5b1	2	30′-4	63	5b1	2	26′-1	54	5b1	2	21′-10	46
WINGWALL, F.F.H.	5b2	10 VAR	2 EACH 11′-11:28′-11	213	5b2	8 VAR	2 EACH 11′-11:24′-8	153	5b2	6 VAR	2 EACH 11′-11:20′-5	101
WINGWALL, B.F.H.	4b3	2	30′-8	41	4b3	2	26′-5	35	4b3	2	22′-2	30
WINGWALL, B.F.H.	4b4	8 VAR	2 EACH 16′-6:29′-3	122	4b4	6 VAR	2 EACH 16′-6:25′-0	83	4b4	4 VAR	2 EACH 16′-6:20′-9	50
WINGWALL, F.F.V.	5c1	54 VAR	2 EACH 2′-7:8′-9	319	4c1	46 VAR	2 EACH 2′-7:7′-10	160	4c1	36 VAR	2 EACH 2′-7:6′-7	110
WINGWALL, F.F.V. (O)	5c2	2	8′-11	19	4c2	2	7′-11	11	4c2	2	6′-11	9
WINGWALL, F.F.V. (A)	5c2	3	8′-11	28	4c2	3	7′-11	16	4c2	3	6′-11	14
WINGWALL, B.F.V.	5c3	54 VAR	2 EACH 6′-8:12′-10	549	5c3	46 VAR	2 EACH 6′-8:11′-11	446	5c3	36 VAR	2 EACH 6′-8:10′-8	325
WINGWALL, B.F.V. (O)	5c4	1	12′-11	13	5c4	1	11′-11	12	5c4	1	10′-11	11
WINGWALL, B.F.V. (A)	5c4	4	12′-11	54	5c4	4	11′-11	50	5c4	4	10′-11	46
WINGWALL, B.F.V.	5c5	34	9′-0	319	5c5	30	8′-6	266	5c5	26	8′-0	217
APRON, LONGIT., BOTT.	4d1	9	30′-1	181	4d1	9	25′-10	155	4d1	9	21′-8	130
APRON, LONGIT., TOP	6f1	11	30′-1	497	6f1	11	25′-10	427	6f1	11	21′-8	358
PARAPET, VERTICAL	4i1	29	7′-10	152	4i1	29	7′-10	152	4i1	29	7′-10	152
PARAPET, HORIZ.	8j1	4	15′-10	169	8j1	4	15′-10	169	8j1	4	15′-10	169
APRON, TRANS., TOP	5m1	46	11′-8	560	5m1	38	11′-8	462	5m1	29	11′-8	353
APRON, TRANS., TOP	5m2	18 VAR	2′-1:10′-7	119	5m2	17 VAR	2′-4:10′-4	112	5m2	18 VAR	2′-2:10′-8	120
APRON, TRANS., BOTT.	4m3	19	11′-2	142	4m3	16	11′-2	119	4m3	13	11′-2	97
CURTAIN, HORIZ.	6p1	5	15′-10	119	6p1	5	15′-10	119	6p1	5	15′-10	119
WING SLOPE, BOTH F.	6s1	4	21′-11	132	6s1	4	17′-7	106	6s1	4	13′-2	79
WING SLOPE, BOTH F. (O)	6s2	2	9′-10	30	6s2	2	9′-9	29	6s2	2	9′-9	29
WING SLOPE, BOTH F. (A)	6s3	2	10′-6	32	6s3	2	10′-5	31	6s3	2	10′-5	31
WING SLOPE, F. F.	6s4	2	13′-8	41	6s4	2	13′-8	41	6s4	2	13′-8	41
WING SLOPE, F. F.	6s5	2	19′-11	60	6s5	2	15′-7	47	6s5	2	11′-3	34
CURTAIN, VERT.	5t1	15	6′-5	100	5t1	15	6′-5	100	5t1	15	6′-5	100
CURTAIN, VERT., ENDS	5t2	4	6′-10	29	5t2	4	6′-10	29	5t2	4	6′-10	29
BRACKET, VERT.	5u1	4	5′-4	22	5u1	4	5′-4	22	5u1	4	5′-4	22
ESTIMATED QUANTITIES ONE HEADWALL	4131 LBS.				3412 LBS.				2828 LBS.			
	PARAPET Δ	1.9	25.6 CU.YD.		PARAPET Δ	1.9	21.6 CU.YD.		PARAPET Δ	1.9	17.8 CU.YD.	
	WINGWALLS	7.0			WINGWALLS	5.2			WINGWALLS	3.6		
	APRON	16.7			APRON	14.5			APRON	12.3		

Δ INCLUDES TOP OF WINGWALL QUANTITIES.

NOTE: WEIGHT OF BARS OVER 40′-0 LONG INCLUDE AN ALLOWANCE OF 2′-0 FOR LAP.

(A) - INDICATES BAR LOCATED AT ACUTE CORNER.
(O) - INDICATES BAR LOCATED AT OBTUSE CORNER.
REFER TO SHEET PWH 45-1-12 FOR ACUTE AND OBTUSE CORNER LOCATIONS.

BENT BAR DETAILS

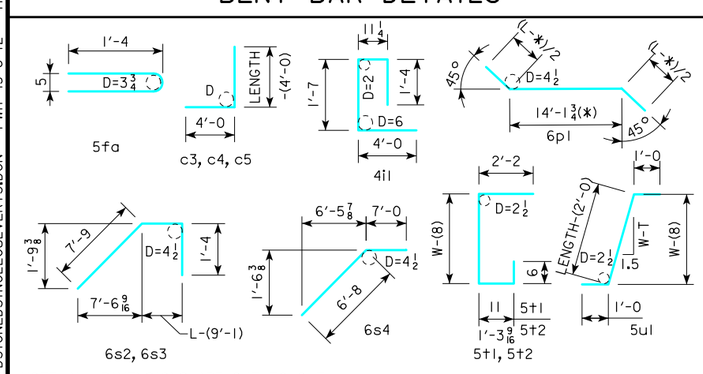

NOTE: ALL DIMENSIONS ARE OUT TO OUT
D = PIN DIAMETER
SEE TABLE AT RIGHT FOR PIN DIAMETER "D" OF c BARS

c BAR PIN DIAMETER	
BAR SIZE	D
4	3
5	3¾
6	4½

HEADWALL NOTES:

THIS HEADWALL IS BASED ON A 3:1 SLOPE NORMAL TO CENTERLINE OF ROADWAY.

THE SIDES OF THE FOOTING ARE TO BE FORMED TO INSURE CORRECT LINE AND GRADE.

ALL EXPOSED CORNERS OF 90° OR SHARPER ARE TO BE FILLETED WITH A ¾" DRESSED AND BEVELED STRIP.

ALL REINFORCING IS TO BE SECURELY WIRED IN PLACE BEFORE THE CONCRETE IS POURED. ALL SLAB AND FLOOR REINFORCING STEEL IS TO BE SUPPORTED BY BAR CHAIRS AT INTERVALS OF NOT MORE THAN 3′-0 IN EITHER DIRECTION AS OUTLINED IN THE STANDARD SPECIFICATIONS.

CLEAR DISTANCE FROM FACE OF CONCRETE TO NEAR REINFORCING BAR IS TO BE 2" UNLESS OTHERWISE NOTED OR SHOWN. CLEARANCE TO THE BOTTOM ENDS OF VERTICAL BARS SHALL BE 3 INCHES.

CONCRETE QUANTITIES ARE ESTIMATED FROM BACK OF PARAPET.

HORIZONTAL TAILS OF BARS "b" & "s" ESTIMATED TO EXTEND 2′-0 BEYOND BACK OF PARAPET (INTO END OF BARREL). LONGITUDINAL BARS "4d1" AND "6f1" ESTIMATED TO PROJECT INTO END SECTION OF BARREL A MINIMUM OF 2′-0 BEYOND BACK OF PARAPET. THE "LENGTH" COLUMN REFLECTS TOTAL NUMBER OF FEET NECESSARY TO MEET THESE REQUIREMENTS.

07-2016
LATEST REVISION DATE

APPROVED BY BRIDGE ENGINEER

IOWADOT Highway Division

STANDARD DESIGN - SINGLE REINFORCED CONCRETE BOX CULVERTS

PARALLEL WING HEADWALLS

APRIL, 2012

QUANTITY TABULATION
10′-0 SPAN
45° SKEW

PWH 45-6-12

REVISED 07-2016 - CHANGED FENCE ANCHOR BAR (5fa) FROM 3′-1 TO 2′-10.
ENGLISHLRFDSIGNEDSINGLECULVERTS.DGN - PWH 45-6-12 - THIS SHEET ISSUED 04-12.

BILL OF REINFORCING FOR ONE HEADWALL 45° SKEW CULVERT SPAN x CULVERT HEIGHT

LOCATION	SHAPE	8′ x 10′				8′ x 9″				8′ x 8′			
		BAR	NO.	LENGTH	WT.	BAR	NO.	LENGTH	WT.	BAR	NO.	LENGTH	WT.
FENCE ANCHOR (GALV.)		5fa	2	2′-10	6	5fa	2	2′-10	6	5fa	2	2′-10	6
WINGWALL, F.F.H.		5b1	2	47′-4	103	5b1	2	43′-1	94	5b1	2	38′-10	81
WINGWALL, F.F.H.		5b2	18 VAR	2 EACH 12′-0:45′-11	552	5b2	16 VAR	2 EACH 11′-11:41′-8	451	5b2	14 VAR	2 EACH 11′-11:37′-5	360
WINGWALL, B.F.H.		4b3	2	47′-8	66	4b3	2	43′-6	61	4b3	2	39′-3	52
WINGWALL, B.F.H.		4b4	16 VAR	2 EACH 16′-7:46′-3	341	4b4	14 VAR	2 EACH 16′-7:42′-1	277	4b4	12 VAR	2 EACH 16′-7:37′-10	218
WINGWALL, F.F.V.		6c1	116 VAR	2 EACH 2′-6:12′-6	1307	5c1	106 VAR	2 EACH 2′-5:11′-8	779	5c1	70 VAR	2 EACH 2′-5:10′-6	472
WINGWALL, F.F.V. (O)		6c2	2	12′-9	38	5c2	2	11′-9	25	5c2	2	10′-9	22
WINGWALL, F.F.V. (A)		6c2	3	12′-9	57	5c2	3	11′-9	37	5c2	3	10′-9	34
WINGWALL, B.F.V.		6c3	88 VAR	2 EACH 6′-0:16′-2	1465	5c3	80 VAR	2 EACH 6′-0:15′-3	887	5c3	70 VAR	2 EACH 6′-0:14′-1	733
WINGWALL, B.F.V. (O)		6c4	1	16′-3	24	5c4	1	15′-3	16	5c4	1	14′-3	15
WINGWALL, B.F.V. (A)		6c4	4	16′-3	98	5c4	4	15′-3	64	5c4	4	14′-3	59
WINGWALL, B.F.V.		6c5	54	8′-6	689	5c5	50	8′-6	443	5c5	46	8′-6	408
APRON, LONGIT., BOTT.		4d1	7	47′-1	230	4d1	7	42′-10	210	4d1	7	38′-7	180
APRON, LONGIT., TOP		6f1	9	47′-1	664	6f1	9	42′-10	606	6f1	9	38′-7	522
PARAPET, VERTICAL		4i1	23	7′-10	120	4i1	23	7′-10	120	4i1	23	7′-10	120
PARAPET, HORIZ.		7j1	4	13′-2	108	7j1	4	13′-2	108	7j1	4	13′-2	108
APRON, TRANS., TOP		5m1	82	9′-10	841	5m1	74	9′-10	759	5m1	65	9′-10	667
APRON, TRANS., TOP		5m2	14 VAR	2′-2:8′-8	79	5m2	13 VAR	2′-5:8′-5	73	5m2	14 VAR	2′-2:8′-8	79
APRON, TRANS., BOTT.		5m3	61	10′-5	663	6m3	28	11′-4	477	6m3	25	11′-4	426
CURTAIN, HORIZ.		6p1	6	13′-2	119	6p1	6	13′-2	119	6p1	6	13′-2	119
WING SLOPE, BOTH F.		6s1	4	39′-4	236	6s1	4	35′-0	210	6s1	4	30′-8	184
WING SLOPE, BOTH F. (O)		6s2	2	9′-10	30	6s2	2	9′-9	29	6s2	2	9′-9	29
WING SLOPE, BOTH F. (A)		6s3	2	10′-7	32	6s3	2	10′-6	32	6s3	2	10′-6	32
WING SLOPE, F. F.		6s4	2	13′-8	41	6s4	2	13′-8	41	6s4	2	13′-8	41
WING SLOPE, F. F.		6s5	2	37′-4	112	6s5	2	33′-0	99	6s5	2	28′-8	86
CURTAIN, VERT.		5t1	12	7′-5	93	5t1	12	7′-2	90	5t1	12	6′-11	87
CURTAIN, VERT., ENDS		5t2	4	7′-10	33	5t2	4	7′-7	32	5t2	4	7′-4	31
BRACKET, VERT.		5u1	4	6′-2	26	5u1	4	5′-11	25	5u1	4	5′-8	24

LOCATION	8′ x 7′				8′ x 6′				8′ x 5′				8′ x 4′			
	BAR	NO.	LENGTH	WT.	BAR	NO.	LENGTH	WT.	BAR	NO.	LENGTH	WT.	BAR	NO.	LENGTH	WT.
FENCE ANCHOR (GALV.)	5fa	2	2′-10	6	5fa	2	2′-10	6	5fa	2	2′-10	6	5fa	2	2′-10	6
WINGWALL, F.F.H.	5b1	2	34′-7	72	5b1	2	30′-4	63	5b1	2	26′-1	54	5b1	2	21′-10	46
WINGWALL, F.F.H.	5b2	12 VAR	2 EACH 11′-11:33′-2	282	5b2	10 VAR	2 EACH 11′-11:28′-11	213	5b2	8 VAR	2 EACH 11′-11:24′-8	153	5b2	6 VAR	2 EACH 11′-11:20′-5	101
WINGWALL, B.F.H.	4b3	2	34′-11	47	4b3	2	30′-8	41	4b3	2	26′-5	35	4b3	2	22′-2	30
WINGWALL, B.F.H.	4b4	10 VAR	2 EACH 16′-6:33′-6	167	4b4	8 VAR	2 EACH 16′-6:29′-3	122	4b4	6 VAR	2 EACH 16′-6:25′-0	83	4b4	4 VAR	2 EACH 16′-6:20′-9	50
WINGWALL, F.F.V.	5c1	62 VAR	2 EACH 2′-5:9′-6	385	4c1	54 VAR	2 EACH 2′-5:8′-7	198	4c1	46 VAR	2 EACH 2′-5:7′-8	155	4c1	36 VAR	2 EACH 2′-5:6′-5	106
WINGWALL, F.F.V. (O)	5c2	2	9′-9	20	4c2	2	8′-9	12	4c2	2	7′-9	10	4c2	2	6′-9	9
WINGWALL, F.F.V. (A)	5c2	3	9′-9	31	4c2	3	8′-9	18	4c2	3	7′-9	16	5c2	3	6′-9	14
WINGWALL, B.F.V.	5c3	62 VAR	2 EACH 6′-0:13′-1	617	5c3	54 VAR	2 EACH 6′-0:12′-2	512	5c3	46 VAR	2 EACH 6′-0:11′-3	414	6c3	36 VAR	2 EACH 6′-0:10′-0	433
WINGWALL, B.F.V. (O)	5c4	1	13′-3	14	5c4	1	12′-3	13	5c4	1	11′-3	12	6c4	1	10′-3	15
WINGWALL, B.F.V. (A)	5c4	4	13′-3	55	5c4	4	12′-3	51	5c4	4	11′-3	47	6c4	4	10′-3	62
WINGWALL, B.F.V.	5c5	42	8′-6	372	5c5	34	8′-4	296	5c5	30	7′-10	245	c5	-	-	-
APRON, LONGIT., BOTT.	4d1	7	34′-4	161	4d1	7	30′-1	141	4d1	7	25′-10	121	4d1	7	21′-8	101
APRON, LONGIT., TOP	6f1	9	34′-4	464	6f1	9	30′-1	407	6f1	9	25′-10	349	6f1	9	21′-8	293
PARAPET, VERTICAL	4i1	23	7′-10	120	4i1	23	7′-10	120	4i1	23	7′-10	120	4i1	23	7′-10	120
PARAPET, HORIZ.	7j1	4	13′-0	106	7j1	4	13′-0	106	7j1	4	13′-0	106	7j1	4	13′-0	106
APRON, TRANS., TOP	6m1	38	9′-8	552	5m1	48	9′-8	484	5m1	40	9′-8	403	6m1	21	9′-8	305
APRON, TRANS., TOP	6m2	9 VAR	2′-4:8′-4	72	5m2	14 VAR	2′-1:8′-7	78	5m2	13 VAR	2′-4:8′-4	72	6m2	9 VAR	2′-5:8′-5	73
APRON, TRANS., BOTT.	5m3	22	10′-3	235	4m3	19	9′-4	118	4m3	16	9′-4	100	4m3	13	9′-4	81
CURTAIN, HORIZ.	6p1	5	13′-0	98	6p1	5	13′-0	98	6p1	5	13′-0	98	6p1	5	13′-0	98
WING SLOPE, BOTH F.	6s1	4	26′-3	158	6s1	4	21′-11	132	6s1	4	17′-7	106	6s1	4	13′-2	79
WING SLOPE, BOTH F. (O)	6s2	2	9′-10	30	6s2	2	9′-9	29	6s2	2	9′-9	29	6s2	2	9′-9	29
WING SLOPE, BOTH F. (A)	6s3	2	10′-6	32	6s3	2	10′-5	31	6s3	2	10′-5	31	6s3	2	10′-5	31
WING SLOPE, F. F.	6s4	2	13′-8	41	6s4	2	13′-8	41	6s4	2	13′-8	41	6s4	2	13′-8	41
WING SLOPE, F. F.	6s5	2	24′-4	73	6s5	2	19′-11	60	6s5	2	15′-7	47	6s5	2	11′-3	34
CURTAIN, VERT.	5t1	12	6′-8	83	5t1	12	6′-5	80	5t1	12	6′-5	80	5t1	12	6′-5	80
CURTAIN, VERT., ENDS	5t2	4	7′-1	30	5t2	4	6′-10	29	5t2	4	6′-10	29	5t2	4	6′-10	29
BRACKET, VERT.	5u1	4	5′-6	23	5u1	4	5′-3	22	5u1	4	5′-3	22	5u1	4	5′-3	22

ESTIMATED QUANTITIES ONE HEADWALL		8′ x 10′			8′ x 9″			8′ x 8′			8′ x 7′		
REINF. STEEL		8173 LBS.			6170 LBS.			5195 LBS.			4346 LBS.		
CONCRETE	PARAPET Δ	1.7	40.3 CU.YD.	PARAPET Δ	1.7	35.4 CU.YD.	PARAPET Δ	1.7	30.7 CU.YD.	PARAPET Δ	1.6	24.9 CU.YD.	
	WINGWALLS	18.6		WINGWALLS	15.5		WINGWALLS	12.7		WINGWALLS	9.1		
	APRON	20.0		APRON	18.2		APRON	16.3		APRON	14.2		

ESTIMATED QUANTITIES ONE HEADWALL	8′ x 6′			8′ x 5′			8′ x 4′		
REINF. STEEL	3521 LBS.			2984 LBS.			2394 LBS.		
CONCRETE	PARAPET Δ	1.6	21.1 CU.YD.	PARAPET Δ	1.6	17.7 CU.YD.	PARAPET Δ	1.6	14.5 CU.YD.
	WINGWALLS	7.0		WINGWALLS	5.2		WINGWALLS	3.6	
	APRON	12.5		APRON	10.9		APRON	9.3	

Δ INCLUDES TOP OF WINGWALL QUANTITIES.

NOTE: WEIGHT OF BARS OVER 40′-0 LONG INCLUDE AN ALLOWANCE OF 2′-0 FOR LAP.

(A) - INDICATES BAR LOCATED AT ACUTE CORNER.
(O) - INDICATES BAR LOCATED AT OBTUSE CORNER.
REFER TO SHEET PWH 45-1-12 FOR ACUTE AND OBTUSE CORNER LOCATIONS.

BENT BAR DETAILS

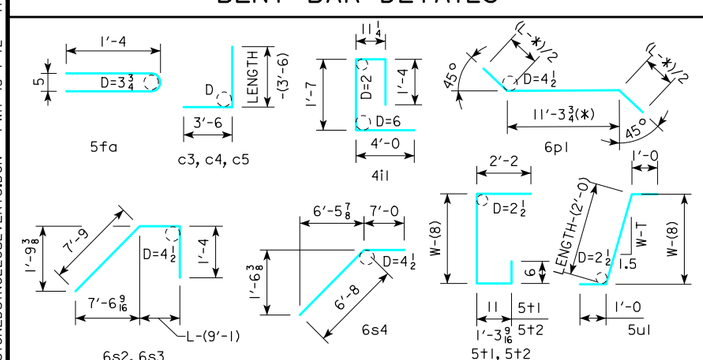

NOTE: ALL DIMENSIONS ARE OUT TO OUT
D = PIN DIAMETER
SEE TABLE AT RIGHT FOR PIN DIAMETER "D" OF c BARS

c BAR PIN DIAMETER	
BAR SIZE	D
4	3
5	3¾
6	4½

HEADWALL NOTES:

THIS HEADWALL IS BASED ON A 3:1 SLOPE NORMAL TO CENTERLINE OF ROADWAY.

THE SIDES OF THE FOOTING ARE TO BE FORMED TO INSURE CORRECT LINE AND GRADE.

ALL EXPOSED CORNERS OF 90° OR SHARPER ARE TO BE FILLETED WITH A ¾" DRESSED AND BEVELED STRIP.

ALL REINFORCING IS TO BE SECURELY WIRED IN PLACE BEFORE THE CONCRETE IS POURED. ALL SLAB AND FLOOR REINFORCING STEEL IS TO BE SUPPORTED BY BAR CHAIRS AT INTERVALS OF NOT MORE THAN 3′-0 IN EITHER DIRECTION AS OUTLINED IN THE STANDARD SPECIFICATIONS.

CLEAR DISTANCE FROM FACE OF CONCRETE TO NEAR REINFORCING BAR IS TO BE 2" UNLESS OTHERWISE NOTED OR SHOWN. CLEARANCE TO THE BOTTOM ENDS OF VERTICAL BARS SHALL BE 3 INCHES.

CONCRETE QUANTITIES ARE ESTIMATED FROM BACK OF PARAPET.

HORIZONTAL TAILS OF BARS "b" & "s" ESTIMATED TO EXTEND 2′-0 BEYOND BACK OF PARAPET (INTO END OF BARREL). LONGITUDINAL BARS "4d1" AND "6f1" ESTIMATED TO PROJECT INTO END SECTION OF BARREL A MINIMUM OF 2′-0 BEYOND BACK OF PARAPET. THE "LENGTH" COLUMN REFLECTS TOTAL NUMBER OF FEET NECESSARY TO MEET THESE REQUIREMENTS.

07-2016
LATEST REVISION DATE

APPROVED BY BRIDGE ENGINEER

IOWA DOT Highway Division

STANDARD DESIGN - SINGLE REINFORCED CONCRETE BOX CULVERTS

PARALLEL WING HEADWALLS

APRIL, 2012

QUANTITY TABULATION
8′-0 SPAN
45° SKEW

PWH 45-7-12

REVISED 07-2016 - CHANGED FENCE ANCHOR BAR (5fa) FROM 3′-1 TO 2′-10.
ENGLISHLRFDSIGNEDSINGLECULVERTS.DGN - PWH 45-7-12 - THIS SHEET ISSUED 04-12.

BILL OF REINFORCING FOR ONE HEADWALL 45° SKEW CULVERT SPAN x CULVERT HEIGHT

LOCATION	SHAPE	6′ x 8′				6′ x 7′				6′ x 6′				6′ x 5′				6′ x 4′				6′ x 3′			
		BAR	NO.	LENGTH	WT.	BAR	NO.	LENGTH	WT.	BAR	NO.	LENGTH	WT.	BAR	NO.	LENGTH	WT.	BAR	NO.	LENGTH	WT.	BAR	NO.	LENGTH	WT.
FENCE ANCHOR (GALV.)		5fa	2	2′-10	6	5fa	2	2′-10	6	5fa	2	2′-10	6	5fa	2	2′-10	6	5fa	2	2′-10	6	5fa	2	2′-10	6
WINGWALL, F.F.H.		5b1	2	38′-10	81	5b1	2	34′-7	72	5b1	2	30′-4	63	5b1	2	26′-1	54	5b1	2	21′-10	46	5b1	2	17′-7	37
WINGWALL, F.F.H.		5b2	14 VAR	2 EACH 11′-11:37′-5	360	5b2	12 VAR	2 EACH 11′-11:33′-2	282	5b2	10 VAR	2 EACH 11′-11:28′-11	213	5b2	8 VAR	2 EACH 11′-11:24′-8	153	5b2	6 VAR	2 EACH 11′-11:20′-5	101	5b2	4 VAR	2 EACH 11′-11:16′-2	59
WINGWALL, B.F.H.		4b3	2	39′-3	52	4b3	2	34′-11	47	4b3	2	30′-8	41	4b3	2	26′-5	35	4b3	2	22′-2	30	4b3	2	17′-11	24
WINGWALL, B.F.H.		4b4	12 VAR	2 EACH 16′-7:37′-10	218	4b4	10 VAR	2 EACH 16′-6:33′-6	167	4b4	8 VAR	2 EACH 16′-6:29′-3	122	4b4	6 VAR	2 EACH 16′-6:25′-0	83	4b4	4 VAR	2 EACH 16′-6:20′-9	50	4b4	2	16′-6	22
WINGWALL, F.F.V.		5c1	70 VAR	2 EACH 2′-5:10′-6	472	5c1	62 VAR	2 EACH 2′-5:9′-6	385	4c1	54 VAR	2 EACH 2′-5:8′-7	198	4c1	46 VAR	2 EACH 2′-5:7′-8	155	4c1	36 VAR	2 EACH 2′-5:6′-5	106	4c1	28 VAR	2 EACH 2′-5:5′-6	74
WINGWALL, F.F.V. (O)		5c2	2	10′-9	22	5c2	2	9′-9	20	4c2	2	8′-9	12	4c2	2	7′-9	10	4c2	2	6′-9	9	4c2	2	5′-9	8
WINGWALL, F.F.V. (A)		5c2	3	10′-9	34	5c2	3	9′-9	31	4c2	3	8′-9	18	4c2	3	7′-9	16	4c2	3	6′-9	14	4c2	3	5′-9	12
WINGWALL, B.F.V.		5c3	70 VAR	2 EACH 6′-0:14′-1	733	5c3	62 VAR	2 EACH 6′-0:13′-1	617	6c3	54 VAR	2 EACH 6′-0:12′-2	737	6c3	46 VAR	2 EACH 6′-0:11′-3	596	5c3	36 VAR	2 EACH 6′-0:10′-0	300	5c3	28 VAR	2 EACH 6′-0:9′-1	220
WINGWALL, B.F.V. (O)		5c4	1	14′-3	15	5c4	1	13′-3	14	6c4	1	12′-3	18	6c4	1	11′-3	17	5c4	1	10′-3	11	5c4	1	9′-3	10
WINGWALL, B.F.V. (A)		5c4	4	14′-3	59	5c4	4	13′-3	55	6c4	4	12′-3	74	6c4	4	11′-3	68	5c4	4	10′-3	43	5c4	4	9′-3	39
WINGWALL, B.F.V.		5c5	46	8′-6	408	5c5	42	8′-6	372	c5	-	-	-	c5	-	-	-	c5	-	-	-	c5	-	-	-
APRON, LONGIT., BOTT.		4d1	6	38′-7	155	4d1	6	34′-4	138	4d1	6	30′-1	121	4d1	6	25′-10	104	4d1	6	21′-8	87	4d1	6	17′-5	70
APRON, LONGIT., TOP		6f1	7	38′-7	406	6f1	7	34′-4	361	6f1	7	30′-1	316	6f1	7	25′-10	272	6f1	7	21′-8	228	6f1	7	17′-5	183
PARAPET, VERTICAL		4i1	17	7′-10	89	4i1	17	7′-10	89	4i1	17	7′-10	89	4i1	17	7′-10	89	4i1	17	7′-10	89	4i1	17	7′-10	89
PARAPET, HORIZ.		7j1	4	10′-4	84	7j1	4	10′-2	83	7j1	4	10′-2	83	7j1	4	10′-2	83	7j1	4	10′-2	83	7j1	4	10′-2	83
APRON, TRANS., TOP		6m1	34	7′-10	400	6m1	30	7′-8	345	6m1	25	7′-8	288	6m1	21	7′-8	242	6m1	17	7′-8	196	6m1	13	7′-8	150
APRON, TRANS., TOP		6m2	5 VAR	2′-2:6′-2	31	6m2	4 VAR	2′-10:5′-10	26	6m2	5 VAR	2′-7:6′-7	34	6m2	5 VAR	2′-4:6′-4	33	6m2	5 VAR	2′-2:6′-2	31	6m2	4 VAR	2′-11:5′-11	27
APRON, TRANS., BOTT.		6m3	25	8′-6	319	5m3	22	7′-5	170	5m3	19	7′-5	147	4m3	16	6′-6	69	4m3	13	6′-6	56	4m3	10	6′-6	43
CURTAIN, HORIZ.		6p1	6	10′-4	93	6p1	5	10′-2	76	6p1	5	10′-2	76	6p1	5	10′-2	76	6p1	5	10′-2	76	6p1	5	10′-2	76
WING SLOPE, BOTH F.		6s1	4	30′-8	184	6s1	4	26′-3	158	6s1	4	21′-11	132	6s1	4	17′-7	106	6s1	4	13′-2	79	6s1	4	8′-10	53
WING SLOPE, BOTH F. (O)		6s2	2	9′-9	29	6s2	2	9′-10	30	6s2	2	9′-9	29	6s2	2	9′-9	29	6s2	2	9′-9	29	6s2	2	9′-9	29
WING SLOPE, BOTH F. (A)		6s3	2	10′-6	32	6s3	2	10′-6	32	6s3	2	10′-5	31	6s3	2	10′-5	31	6s3	2	10′-5	31	6s3	2	10′-5	31
WING SLOPE, F. F.		6s4	2	13′-8	41	6s4	2	13′-8	41	6s4	2	13′-8	41	6s4	2	13′-8	41	6s4	2	13′-8	41	6s4	2	13′-8	41
WING SLOPE, F. F.		6s5	2	28′-8	86	6s5	2	24′-4	73	6s5	2	19′-11	60	6s5	2	15′-7	47	6s5	2	11′-3	34	6s5	2	6′-10	21
CURTAIN, VERT.		5t1	9	6′-11	65	5t1	9	6′-8	63	5t1	9	6′-5	60	5t1	9	6′-5	60	5t1	9	6′-5	60	5t1	9	6′-5	60
CURTAIN, VERT., ENDS		5t2	4	7′-4	31	5t2	4	7′-1	30	5t2	4	6′-10	29	5t2	4	6′-10	29	5t2	4	6′-10	29	5t2	4	6′-10	29
BRACKET, VERT.		5u1	4	5′-8	24	5u1	4	5′-6	23	5u1	4	5′-3	22	5u1	4	5′-3	22	5u1	4	5′-3	22	5u1	4	5′-3	22

ESTIMATED QUANTITIES ONE HEADWALL		6′ x 8′			6′ x 7′			6′ x 6′			6′ x 5′			6′ x 4′			6′ x 3′		
REINF. STEEL		4529 LBS.			3806 LBS.			3060 LBS.			2526 LBS.			1887 LBS.			1518 LBS.		
CONCRETE	PARAPET Δ	1.5	27.6 CU.YD.	PARAPET Δ	1.4	22.2 CU.YD.	PARAPET Δ	1.4	18.6 CU.YD.	PARAPET Δ	1.4	15.5 CU.YD.	PARAPET Δ	1.4	12.6 CU.YD.	PARAPET Δ	1.4	9.9 CU.YD.
	WINGWALLS	12.7		WINGWALLS	9.1		WINGWALLS	7.0		WINGWALLS	5.2		WINGWALLS	3.6		WINGWALLS	2.2	
	APRON	13.4		APRON	11.7		APRON	10.2		APRON	8.9		APRON	7.6		APRON	6.3	

Δ INCLUDES TOP OF WINGWALL QUANTITIES.

NOTE: WEIGHT OF BARS OVER 40′-0 LONG INCLUDE AN ALLOWANCE OF 2′-0 FOR LAP.

(A) - INDICATES BAR LOCATED AT ACUTE CORNER.
(O) - INDICATES BAR LOCATED AT OBTUSE CORNER.
REFER TO SHEET PWH 45-1-12 FOR ACUTE AND OBTUSE CORNER LOCATIONS.

BENT BAR DETAILS

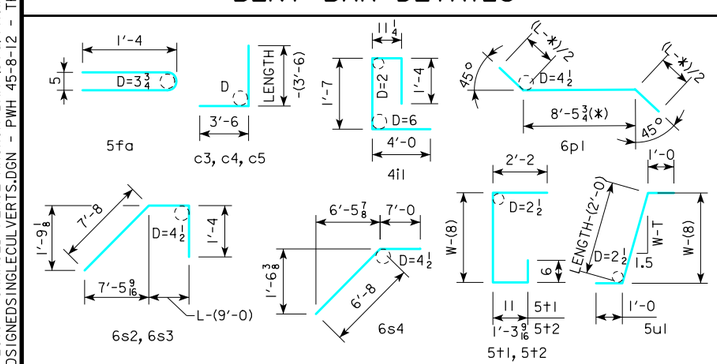

NOTE: ALL DIMENSIONS ARE OUT TO OUT
D = PIN DIAMETER
SEE TABLE AT RIGHT FOR PIN DIAMETER "D" OF c BARS

c BAR PIN DIAMETER	
BAR SIZE	D
4	3
5	3¾
6	4½

HEADWALL NOTES:

THIS HEADWALL IS BASED ON A 3:1 SLOPE NORMAL TO CENTERLINE OF ROADWAY.

THE SIDES OF THE FOOTING ARE TO BE FORMED TO INSURE CORRECT LINE AND GRADE.

ALL EXPOSED CORNERS OF 90° OR SHARPER ARE TO BE FILLETED WITH A ¾" DRESSED AND BEVELED STRIP.

ALL REINFORCING IS TO BE SECURELY WIRED IN PLACE BEFORE THE CONCRETE IS POURED. ALL SLAB AND FLOOR REINFORCING STEEL IS TO BE SUPPORTED BY BAR CHAIRS AT INTERVALS OF NOT MORE THAN 3′-0 IN EITHER DIRECTION AS OUTLINED IN THE STANDARD SPECIFICATIONS.

CLEAR DISTANCE FROM FACE OF CONCRETE TO NEAR REINFORCING BAR IS TO BE 2" UNLESS OTHERWISE NOTED OR SHOWN. CLEARANCE TO THE BOTTOM ENDS OF VERTICAL BARS SHALL BE 3 INCHES.

CONCRETE QUANTITIES ARE ESTIMATED FROM BACK OF PARAPET.

HORIZONTAL TAILS OF BARS "b" & "s" ESTIMATED TO EXTEND 2′-0 BEYOND BACK OF PARAPET (INTO END OF BARREL). LONGITUDINAL BARS "4d1" AND "6f1" ESTIMATED TO PROJECT INTO END SECTION OF BARREL A MINIMUM OF 2′-0 BEYOND BACK OF PARAPET. THE "LENGTH" COLUMN REFLECTS TOTAL NUMBER OF FEET NECESSARY TO MEET THESE REQUIREMENTS.

07-2016
LATEST REVISION DATE

APPROVED BY BRIDGE ENGINEER

IOWA DOT Highway Division

STANDARD DESIGN - SINGLE REINFORCED CONCRETE BOX CULVERTS

PARALLEL WING HEADWALLS

APRIL, 2012

QUANTITY TABULATION
6′-0 SPAN
45° SKEW

PWH 45-8-12

REVISED 07-2016 - CHANGED FENCE ANCHOR BAR (5fa) FROM 3′-1 TO 2′-10.
ENGLISHLRFDSIGNEDSINGLECULVERTS.DGN - PWH 45-8-12 - THIS SHEET ISSUED 04-12.

BILL OF REINFORCING FOR ONE HEADWALL
45° SKEW CULVERT SPAN x CULVERT HEIGHT

LOCATION	SHAPE	5′ x 6′				5′ x 5′				5′ x 4′				5′ x 3′			
		BAR	NO.	LENGTH	WT.	BAR	NO.	LENGTH	WT.	BAR	NO.	LENGTH	WT.	BAR	NO.	LENGTH	WT.
FENCE ANCHOR (GALV.)		5fa	2	2′-10	6	5fa	2	2′-10	6	5fa	2	2′-10	6	5fa	2	2′-10	6
WINGWALL, F.F.H.		5b1	2	30′-4	63	5b1	2	26′-1	54	5b1	2	21′-10	46	5b1	2	17′-7	37
WINGWALL, F.F.H.		5b2	10 VAR	2 EACH 11′-11:28′-11	213	5b2	8 VAR	2 EACH 11′-11:24′-8	153	5b2	6 VAR	2 EACH 11′-11:20′-5	101	5b2	4 VAR	2 EACH 11′-11:16′-2	59
WINGWALL, B.F.H.		4b3	2	30′-8	41	4b3	2	26′-5	35	4b3	2	22′-2	30	4b3	2	17′-11	24
WINGWALL, B.F.H.		4b4	8 VAR	2 EACH 16′-6:29′-3	122	4b4	6 VAR	2 EACH 16′-6:25′-0	83	4b4	4 VAR	2 EACH 16′-6:20′-9	50	4b4	2	16′-6	22
WINGWALL, F.F.V.		4c1	54 VAR	2 EACH 2′-5:8′-7	198	4c1	46 VAR	2 EACH 2′-5:7′-8	155	4c1	36 VAR	2 EACH 2′-5:6′-5	106	4c1	28 VAR	2 EACH 2′-5:5′-6	74
WINGWALL, F.F.V. (O)		4c2	2	8′-9	12	4c2	2	7′-9	10	4c2	2	6′-9	9	4c2	2	5′-9	8
WINGWALL, F.F.V. (A)		4c2	3	8′-9	18	4c2	3	7′-9	16	4c2	3	6′-9	14	4c2	3	5′-9	12
WINGWALL, B.F.V.		6c3	54 VAR	2 EACH 6′-0:12′-2	737	5c3	46 VAR	2 EACH 6′-0:11′-3	414	5c3	36 VAR	2 EACH 6′-0:10′-0	300	5c3	28 VAR	2 EACH 6′-0:9′-1	220
WINGWALL, B.F.V. (O)		6c4	1	12′-3	18	5c4	1	11′-3	12	5c4	1	10′-3	11	5c4	1	9′-3	10
WINGWALL, B.F.V. (A)		6c4	4	12′-3	74	5c4	4	11′-3	47	5c4	4	10′-3	43	5c4	4	9′-3	39
WINGWALL, B.F.V.		c5	–	–	–	c5	–	–	–	c5	–	–	–	c5	–	–	–
APRON, LONGIT., BOTT.		4d1	5	30′-1	100	4d1	5	25′-10	86	4d1	5	21′-8	72	4d1	5	17′-5	58
APRON, LONGIT., TOP		6f1	6	30′-1	271	6f1	6	25′-10	233	6f1	6	21′-8	195	6f1	6	17′-5	157
PARAPET, VERTICAL		4i1	15	7′-10	78	4i1	15	7′-10	78	4i1	15	7′-10	78	4i1	15	7′-10	78
PARAPET, HORIZ.		7j1	4	8′-9	72	7j1	4	8′-9	72	7j1	4	8′-9	72	7j1	4	8′-9	72
APRON, TRANS., TOP		6m1	26	6′-8	260	6m1	22	6′-8	220	6m1	17	6′-8	170	6m1	13	6′-8	130
APRON, TRANS., TOP		6m2	4 VAR	2′-1:5′-1	22	6m2	3 VAR	2′-10:4′-10	17	6m2	4 VAR	2′-8:5′-8	25	6m2	4 VAR	2′-5:5′-5	24
APRON, TRANS., BOTT.		4m3	19	5′-1	65	4m3	16	5′-1	54	4m3	13	5′-1	44	4m3	10	5′-1	34
CURTAIN, HORIZ.		6p1	5	8′-9	66	6p1	5	8′-9	66	6p1	5	8′-9	66	6p1	5	8′-9	66
WING SLOPE, BOTH F.		6s1	4	21′-11	132	6s1	4	17′-7	106	6s1	4	13′-2	79	6s1	4	8′-10	53
WING SLOPE, BOTH F. (O)		6s2	2	9′-9	29	6s2	2	9′-9	29	6s2	2	9′-9	29	6s2	2	9′-9	29
WING SLOPE, BOTH F. (A)		6s3	2	10′-5	31	6s3	2	10′-5	31	6s3	2	10′-5	31	6s3	2	10′-5	31
WING SLOPE, F. F.		6s4	2	13′-8	41	6s4	2	13′-8	41	6s4	2	13′-8	41	6s4	2	13′-8	41
WING SLOPE, F. F.		6s5	2	19′-11	60	6s5	2	15′-7	47	6s5	2	11′-3	34	6s5	2	6′-10	21
CURTAIN, VERT.		5t1	8	6′-5	54	5t1	8	6′-5	54	5t1	8	6′-5	54	5t1	8	6′-5	54
CURTAIN, VERT., ENDS		5t2	4	6′-10	29	5t2	4	6′-10	29	5t2	4	6′-10	29	5t2	4	6′-10	29
BRACKET, VERT.		5u1	4	5′-3	22	5u1	4	5′-3	22	5u1	4	5′-3	22	5u1	4	5′-3	22

ESTIMATED QUANTITIES ONE HEADWALL		5′ x 6′			5′ x 5′			5′ x 4′			5′ x 3′		
REINF. STEEL		2834 LBS.			2170 LBS.			1757 LBS.			1410 LBS.		
CONCRETE	PARAPET Δ	1.3	17.4 CU.YD.	PARAPET Δ	1.3	14.4 CU.YD.	PARAPET Δ	1.3	11.7 CU.YD.	PARAPET Δ	1.3	9.1 CU.YD.	
	WINGWALLS	7.0		WINGWALLS	5.2		WINGWALLS	3.6		WINGWALLS	2.2		
	APRON	9.1		APRON	7.9		APRON	6.8		APRON	5.6		

Δ INCLUDES TOP OF WINGWALL QUANTITIES.

NOTE: WEIGHT OF BARS OVER 40′-0 LONG INCLUDE AN ALLOWANCE OF 2′-0 FOR LAP.

(A) - INDICATES BAR LOCATED AT ACUTE CORNER.
(O) - INDICATES BAR LOCATED AT OBTUSE CORNER.
REFER TO SHEET PWH 45-1-12 FOR ACUTE AND OBTUSE CORNER LOCATIONS.

c BAR PIN DIAMETER	
BAR SIZE	D
4	3
5	$3\frac{3}{4}$
6	$4\frac{1}{2}$

BENT BAR DETAILS

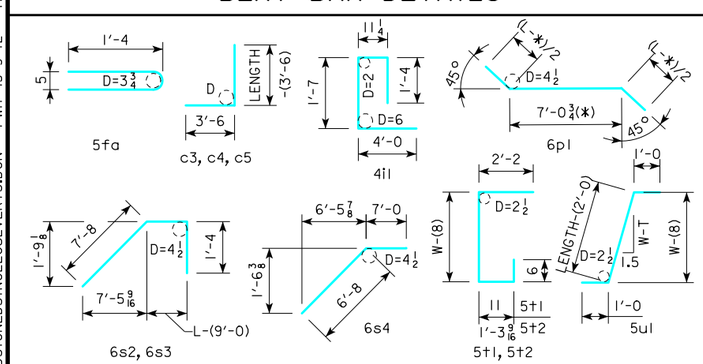

NOTE: ALL DIMENSIONS ARE OUT TO OUT
D = PIN DIAMETER
SEE TABLE AT RIGHT FOR PIN DIAMETER "D" OF c BARS

HEADWALL NOTES:

THIS HEADWALL IS BASED ON A 3:1 SLOPE NORMAL TO CENTERLINE OF ROADWAY.

THE SIDES OF THE FOOTING ARE TO BE FORMED TO INSURE CORRECT LINE AND GRADE.

ALL EXPOSED CORNERS OF 90° OR SHARPER ARE TO BE FILLETED WITH A $\frac{3}{4}$" DRESSED AND BEVELED STRIP.

ALL REINFORCING IS TO BE SECURELY WIRED IN PLACE BEFORE THE CONCRETE IS POURED. ALL SLAB AND FLOOR REINFORCING STEEL IS TO BE SUPPORTED BY BAR CHAIRS AT INTERVALS OF NOT MORE THAN 3′-0 IN EITHER DIRECTION AS OUTLINED IN THE STANDARD SPECIFICATIONS.

CLEAR DISTANCE FROM FACE OF CONCRETE TO NEAR REINFORCING BAR IS TO BE 2" UNLESS OTHERWISE NOTED OR SHOWN. CLEARANCE TO THE BOTTOM ENDS OF VERTICAL BARS SHALL BE 3 INCHES.

CONCRETE QUANTITIES ARE ESTIMATED FROM BACK OF PARAPET.

HORIZONTAL TAILS OF BARS "b" & "s" ESTIMATED TO EXTEND 2′-0 BEYOND BACK OF PARAPET (INTO END OF BARREL). LONGITUDINAL BARS "4d1" AND "6f1" ESTIMATED TO PROJECT INTO END SECTION OF BARREL A MINIMUM OF 2′-0 BEYOND BACK OF PARAPET. THE "LENGTH" COLUMN REFLECTS TOTAL NUMBER OF FEET NECESSARY TO MEET THESE REQUIREMENTS.

07-2016
LATEST REVISION DATE

APPROVED BY BRIDGE ENGINEER

IOWADOT Highway Division

STANDARD DESIGN - SINGLE REINFORCED CONCRETE BOX CULVERTS

PARALLEL WING HEADWALLS

APRIL, 2012

QUANTITY TABULATION
5′-0 SPAN
45° SKEW

PWH 45-9-12

REVISED 07-2016 - CHANGED FENCE ANCHOR BAR (5fa) FROM 3′-1 TO 2′-10.
ENGLISHLRFDSIGNEDSINGLECULVERTS.DGN - PWH 45-9-12 - THIS SHEET ISSUED 04-12.

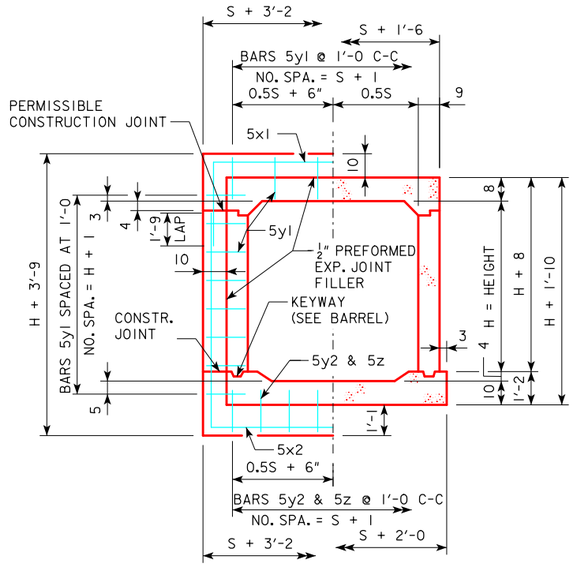

JOINT DETAIL
SECTION THRU BARREL

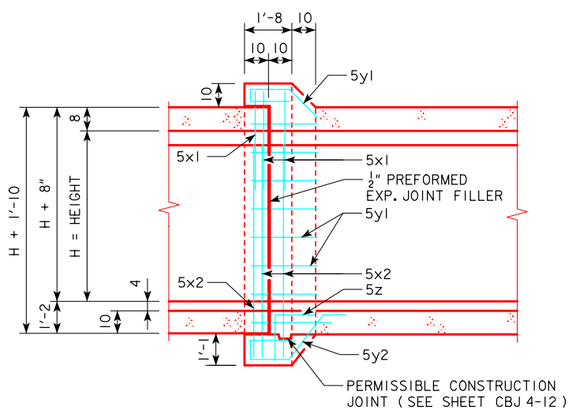

LONGITUDINAL SECTION

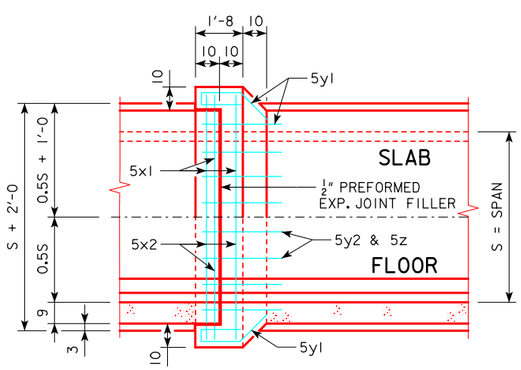

PLAN VIEW

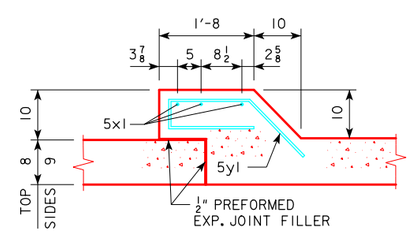

TOP & SIDES - BARS 5y1

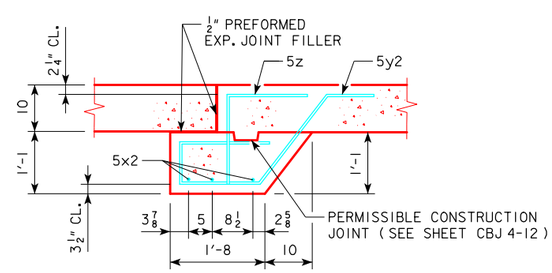

BOTTOM - BARS 5y2 & 5z

ESTIMATE OF QUANTITIES - ONE JOINT - 3', 4', & 5' SPANS

BILL OF REINFORCING STEEL			3' x 3'			4' x 4'			5' x 3'			5' x 4'			5' x 5'			5' x 6'		
BAR	LOCATION	SHAPE	NO.	LENGTH	WEIGHT	NO.	LENGTH	WEIGHT	NO.	LENGTH	WEIGHT	NO.	LENGTH	WEIGHT	NO.	LENGTH	WEIGHT	NO.	LENGTH	WEIGHT
5x1	SLAB & WALLS		3	13'-1	41	3	14'-1	44	3	15'-1	47	3	15'-1	47	3	15'-1	47	3	15'-1	47
5x2	FLOOR & WALLS		3	14'-5	45	3	17'-5	54	3	16'-5	51	3	18'-5	58	3	20'-5	64	3	22'-5	70
5y1	TOP & SIDES		15	4'-10	76	18	4'-10	91	17	4'-10	86	19	4'-10	96	21	4'-10	106	23	4'-10	116
5y2	BOTTOM		5	6'-2	32	6	6'-2	39	7	6'-2	45	7	6'-2	45	7	6'-2	45	7	6'-2	45
5z	BOTTOM & FLOOR		5	2'-10	15	6	2'-10	18	7	2'-10	21	7	2'-10	21	7	2'-10	21	7	2'-10	21
TOTAL WEIGHT (LB)					209			246			250			267			283			299
TOTAL CONCRETE (CY)				1.5			1.8			1.8			1.9			2.0			2.2	

BENT BAR DETAILS

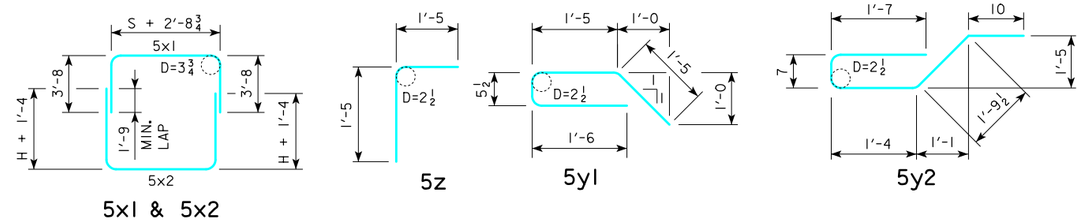

NOTE:
ALL DIMENSIONS ARE OUT TO OUT. D = PIN DIAMETER.

CONCRETE PLACEMENT

BARREL SIZE	BARREL DIMENSION			BELL JOINT QUANTITES (CY)		
	A	B	C	FOOTING	WALLS	SLAB
3' x 3'	8	10	9	0.647	0.336	0.510
4' x 4'	8	10	9	0.730	0.462	0.573
5' x 3'	8	10	9	0.812	0.336	0.636
5' x 4'	8	10	9	0.812	0.462	0.636
5' x 5'	8	10	9	0.812	0.588	0.636
5' x 6'	8	10	9	0.812	0.714	0.636

NOTES:

1. DIMENSIONS AND QUANTITIES SHOWN ARE BASED ON SLAB, FLOOR, AND WALL THICKNESSES (A, B, AND C, RESPECTIVELY). VALUES FOR THESE DIMENSIONS, UNDER VARYING FILL CONDITIONS, CAN BE FOUND ON THE RCB CULVERT BARREL DETAIL SHEETS.
2. CHANGE LENGTHS OF BARS 5x1, 5x2, 5z, AND ADJUST REINFORCING STEEL AND CONCRETE QUANTITIES ACCORDINGLY FOR SLAB, WALL, AND FLOOR THICKNESSES OTHER THAN SHOWN.
3. ALL BAR LENGTHS ARE ESTIMATED WITH A 2" CLEARANCE FROM CONCRETE EDGE TO OUTSIDE OF BAR, EXCEPT AS NOTED.
4. MATERIAL AND CONSTRUCTION TO BE IN ACCORDANCE WITH THE CURRENT STANDARD SPECIFICATIONS OF I.D.O.T.
5. SEE SHEET RCB GI-12 FOR GENERAL INFORMATION, SPECIFICATIONS, AND DESIGN STRESSES.
6. BARREL FLOOR BARS m1 & m9 ARE TO BE SHORTENED 6" IN LENGTH AT BELL JOINTS.

07-13
LATEST REVISION DATE

APPROVED BY BRIDGE ENGINEER

IOWA DOT Highway Division

STANDARD DESIGN

SINGLE REINFORCED CONCRETE BOX CULVERTS

APRIL, 2012

CULVERT BELL JOINTS

3', 4', & 5' SPANS

CBJ 1-12

REVISED 07-13 - THE m9 BARS WERE ADDED TO NOTE NUMBER 6.
ENGLISHLRFDSIGNEDSINGLECULVERTS.DGN - CBJ 1-12 - THIS SHEET ISSUED 04-12.

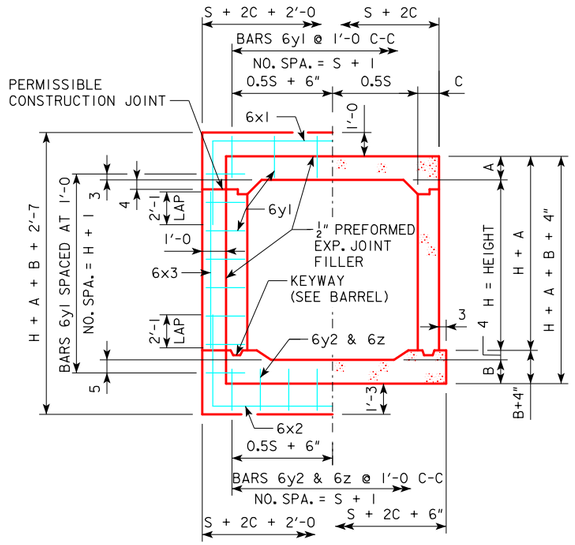

JOINT DETAIL
SECTION THRU BARREL

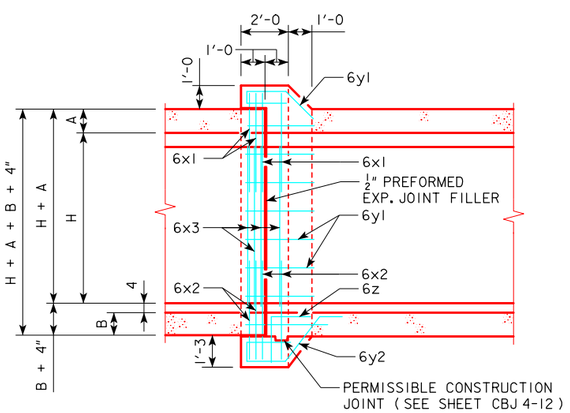

LONGITUDINAL SECTION

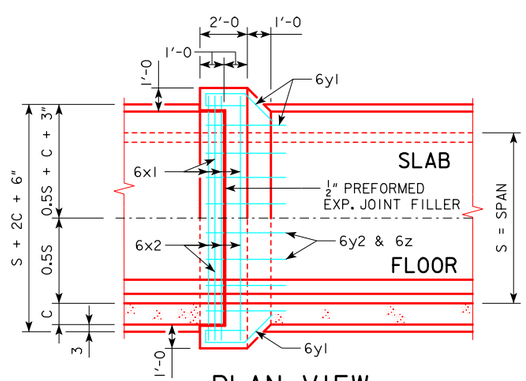

PLAN VIEW

ESTIMATE OF QUANTITIES - ONE JOINT - 6' SPAN

BILL OF REINFORCING STEEL			6' x 3'			6' x 4'			6' x 5'			6' x 6'			6' x 7'			6' x 8'		
BAR	LOCATION	SHAPE	NO.	LENGTH	WEIGHT	NO.	LENGTH	WEIGHT	NO.	LENGTH	WEIGHT	NO.	LENGTH	WEIGHT	NO.	LENGTH	WEIGHT	NO.	LENGTH	WEIGHT
6x1	SLAB & WALLS		4	17'-9	107	4	17'-9	107	4	17'-9	107	4	17'-9	107	4	17'-9	107	4	17'-10	107
6x2	FLOOR & WALLS		4	18'-3	110	4	20'-3	122	4	22'-3	134	4	17'-11	108	4	17'-11	108	4	18'-0	108
6x3	WALLS		--	--	--	--	--	--	--	--	--	8	5'-5	65	8	6'-5	77	8	7'-5	89
6y1	TOP & SIDES		18	6'-2	167	20	6'-2	185	22	6'-2	204	24	6'-2	222	26	6'-2	241	28	6'-2	259
6y2	BOTTOM		8	7'-5	89	8	7'-5	89	8	7'-5	89	8	7'-5	89	8	7'-5	89	8	7'-5	89
6z	BOTTOM & FLOOR		8	3'-2	38	8	3'-2	38	8	3'-2	38	8	3'-2	38	8	3'-2	38	8	3'-2	38
TOTAL WEIGHT (LB)					511			541			572			629			660			690
TOTAL CONCRETE (CY)				2.8			3.0			3.2			3.4			3.5			3.7	

ESTIMATE OF QUANTITIES - ONE JOINT - 8' SPAN

BILL OF REINFORCING STEEL			8' x 4'			8' x 5'			8' x 6'			8' x 7'			8' x 8'			8' x 9'			8' x 10'		
BAR	LOCATION	SHAPE	NO.	LENGTH	WEIGHT	NO.	LENGTH	WEIGHT	NO.	LENGTH	WEIGHT	NO.	LENGTH	WEIGHT	NO.	LENGTH	WEIGHT	NO.	LENGTH	WEIGHT	NO.	LENGTH	WEIGHT
6x1	SLAB & WALLS		4	19'-9	119	4	19'-9	119	4	19'-9	119	4	19'-9	119	4	19'-10	119	4	20'-1	121	4	20'-3	122
6x2	FLOOR & WALLS		4	22'-3	134	4	24'-3	146	4	19'-11	120	4	19'-11	120	4	20'-0	120	4	20'-3	122	4	20'-5	123
6x3	WALLS		--	--	--	--	--	--	8	5'-5	65	8	6'-5	77	8	7'-5	89	8	8'-5	101	8	9'-5	113
6y1	TOP & SIDES		22	6'-2	204	24	6'-2	222	26	6'-2	241	28	6'-2	259	30	6'-2	278	32	6'-2	296	34	6'-2	315
6y2	BOTTOM		10	7'-7	114	10	7-7	114	10	7'-7	114	10	7'-7	114	10	7'-8	115	10	7'-8	115	10	7'-8	115
6z	BOTTOM & FLOOR		10	3'-2	48	10	3'-2	48	10	3'-2	48	10	3'-2	48	10	3'-2	48	10	3'-2	48	10	3'-2	48
TOTAL WEIGHT (LB)					619			649			707			737			769			803			836
TOTAL CONCRETE (CY)				3.5			3.6			3.8			4.0			4.2			4.4			4.7

CONCRETE PLACEMENT

BARREL SIZE	BARREL DIMENSION			BELL JOINT QUANTITES (CY)		
	A	B	C	FOOTING	WALLS	SLAB
6' x 3'	8	10	9	1.285	0.486	1.038
6' x 4'	8	10	9	1.285	0.668	1.038
6' x 5'	8	10	9	1.285	0.850	1.038
6' x 6'	8	10	9	1.285	1.032	1.038
6' x 7'	8	10	9	1.285	1.214	1.038
6' x 8'	8	10	9.5	1.294	1.396	1.045
8' x 4'	10	12	9	1.544	0.668	1.250
8' x 5'	10	12	9	1.544	0.850	1.250
8' x 6'	10	12	9	1.544	1.032	1.250
8' x 7'	10	12	9	1.544	1.214	1.250
8' x 8'	10	12.5	9.5	1.561	1.396	1.258
8' x 9'	10	12.5	11	1.589	1.578	1.280
8' x 10'	10	12.5	12	1.608	1.760	1.296

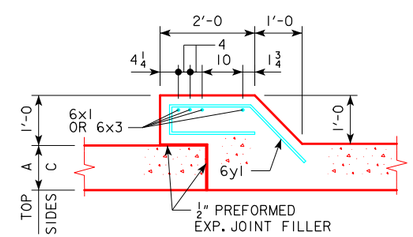

TOP & SIDES - BARS 6y1

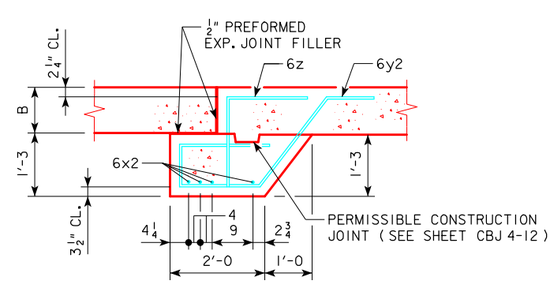

BOTTOM - BARS 6y2 & 6z

BENT BAR DETAILS

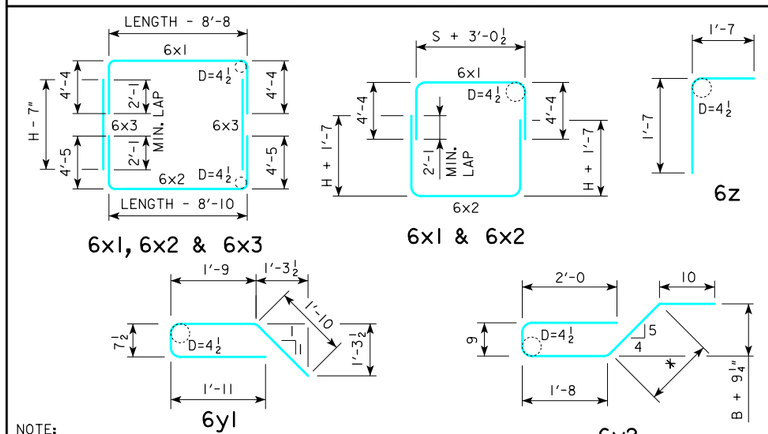

NOTE:
ALL DIMENSIONS ARE OUT TO OUT. D = PIN DIAMETER.
* 1.3 TIMES VERTICAL DIMENSION.

NOTES:

1. DIMENSIONS AND QUANTITIES SHOWN ARE BASED ON SLAB, FLOOR, AND WALL THICKNESSES (A, B, AND C, RESPECTIVELY). VALUES FOR THESE DIMENSIONS, UNDER VARYING FILL CONDITIONS, CAN BE FOUND ON THE RCB CULVERT BARREL DETAIL SHEETS.
2. CHANGE LENGTHS OF BARS 6x1, 6x2, 6z, AND ADJUST REINFORCING STEEL AND CONCRETE QUANTITIES ACCORDINGLY FOR SLAB, WALL, AND FLOOR THICKNESSES OTHER THAN SHOWN.
3. ALL BAR LENGTHS ARE ESTIMATED WITH A 2" CLEARANCE FROM CONCRETE EDGE TO OUTSIDE OF BAR, EXCEPT AS NOTED.
4. MATERIAL AND CONSTRUCTION TO BE IN ACCORDANCE WITH THE CURRENT STANDARD SPECIFICATIONS OF I.D.O.T.
5. SEE SHEET RCB GI-12 FOR GENERAL INFORMATION, SPECIFICATIONS, AND DESIGN STRESSES.
6. BARREL FLOOR BARS m1 & m9 ARE TO BE SHORTENED 6" IN LENGTH AT BELL JOINTS.

07-13
LATEST REVISION DATE

APPROVED BY BRIDGE ENGINEER

IOWA DOT Highway Division

STANDARD DESIGN

SINGLE REINFORCED CONCRETE BOX CULVERTS

APRIL, 2012

CULVERT BELL JOINTS

6' & 8' SPANS

CBJ 2-12

REVISED 07-13 - THE m9 BARS WERE ADDED TO NOTE NUMBER 6.
ENGLISHLRFDSIGNEDSINGLECULVERTS.DGN - CBJ 2-12 - THIS SHEET ISSUED 04-12.

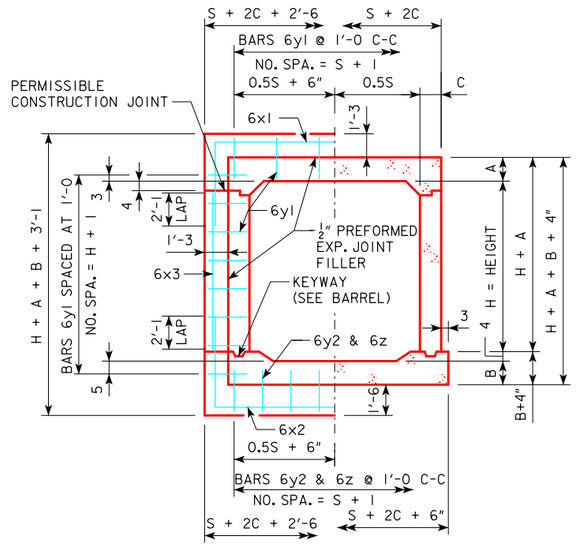

JOINT DETAIL
SECTION THRU BARREL

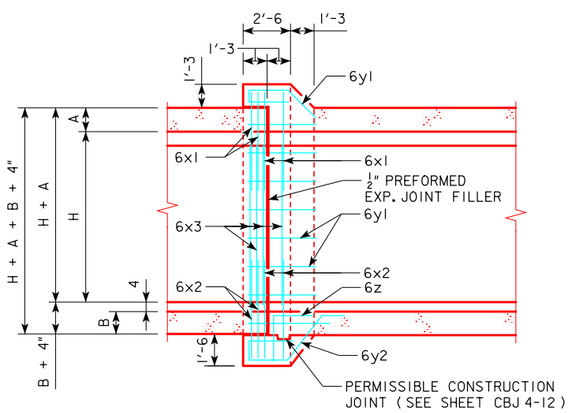

LONGITUDINAL SECTION

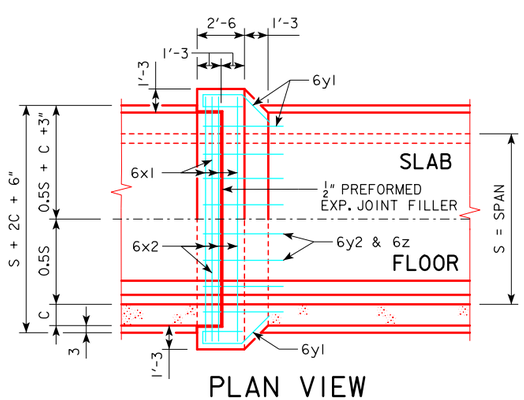

PLAN VIEW

ESTIMATE OF QUANTITIES - ONE JOINT - 10' SPAN

BILL OF REINFORCING STEEL			10' x 4'			10' x 5'			10' x 6'			10' x 7'			10' x 8'			10' x 9'			10' x 10'			10' x 11'			10' x 12'		
BAR	LOCATION	SHAPE	NO.	LENGTH	WEIGHT	NO.	LENGTH	WEIGHT	NO.	LENGTH	WEIGHT	NO.	LENGTH	WEIGHT	NO.	LENGTH	WEIGHT	NO.	LENGTH	WEIGHT	NO.	LENGTH	WEIGHT	NO.	LENGTH	WEIGHT	NO.	LENGTH	WEIGHT
6x1	SLAB & WALLS		4	23'-11	144	4	23'-11	144	4	23'-11	144	4	23'-11	144	4	24'-0	144	4	24'-3	146	4	24'-5	147	4	24'-7	148	4	24'-10	149
6x2	FLOOR & WALLS		4	25'-9	155	4	27'-9	167	4	23'-9	143	4	23'-9	143	4	23'-10	143	4	24'-1	145	4	24'-3	146	4	24'-5	147	4	24'-8	148
6x3	WALLS		--	--	--	--	--	--	8	5'-2	62	8	6'-2	74	8	7'-2	86	8	8'-2	98	8	9'-2	110	8	10'-2	122	8	11'-2	134
6y1	TOP & SIDES		24	8'-0	288	26	8'-0	312	28	8'-0	336	30	8'-0	360	32	8'-0	385	34	8'-0	409	36	8'-0	433	38	8'-0	457	40	8'-0	481
6y2	BOTTOM		12	9'-6	171	12	9'-6	171	12	9'-6	171	12	9'-6	171	12	9'-6	171	12	9'-6	171	12	9'-6	171	12	9'-7	173	12	9'-7	173
6z	BOTTOM & FLOOR		12	3'-11	71	12	3'-11	71	12	3'-11	71	12	3'-11	71	12	3'-11	71	12	3'-11	71	12	3'-11	71	12	3'-11	71	12	3'-11	71
TOTAL WEIGHT (LB)					829			865			927			963			1000			1040			1078			1118			1156
TOTAL CONCRETE (CY)				6.2			6.5			6.8			7.1			7.4			7.8			8.1			8.5			8.8	

ESTIMATE OF QUANTITIES - ONE JOINT - 12' SPAN

BILL OF REINFORCING STEEL			12' x 4'			12' x 5'			12' x 6'			12' x 7'			12' x 8'			12' x 9'			12' x 10'			12' x 11'			12' x 12'		
BAR	LOCATION	SHAPE	NO.	LENGTH	WEIGHT	NO.	LENGTH	WEIGHT	NO.	LENGTH	WEIGHT	NO.	LENGTH	WEIGHT	NO.	LENGTH	WEIGHT	NO.	LENGTH	WEIGHT	NO.	LENGTH	WEIGHT	NO.	LENGTH	WEIGHT	NO.	LENGTH	WEIGHT
6x1	SLAB & WALLS		4	26'-2	157	4	26'-2	157	4	26'-1	157	4	26'-1	157	4	26'-1	157	4	26'-3	158	4	26'-5	159	4	26'-8	160	4	26'-10	161
6x2	FLOOR & WALLS		4	28'-0	168	4	30'-0	180	4	25'-11	156	4	25'-11	156	4	25'-11	156	4	26'-1	157	4	26'-3	158	4	26'-6	159	4	26'-8	160
6x3	WALLS		--	--	--	--	--	--	8	5'-2	62	8	6'-2	74	8	7'-2	86	8	8'-2	98	8	9'-2	110	8	10'-2	122	8	11'-2	134
6y1	TOP & SIDES		26	8'-0	312	28	8'-0	336	30	8'-0	360	32	8'-0	385	34	8'-0	409	36	8'-0	433	38	8'-0	457	40	8'-0	481	42	8'-0	505
6y2	BOTTOM		14	9'-10	207	14	9'-10	207	14	9'-10	207	14	9'-10	207	14	9'-10	207	14	9'-10	207	14	9'-10	207	14	9'-10	207	14	9'-10	207
6z	BOTTOM & FLOOR		14	3'-11	82	14	3'-11	82	14	3'-11	82	14	3'-11	82	14	3'-11	82	14	3'-11	82	14	3'-11	82	14	3'-11	82	14	3'-11	82
TOTAL WEIGHT (LB)					926			962			1024			1061			1097			1135			1173			1211			1249
TOTAL CONCRETE (CY)				7.1			7.3			7.6			7.9			8.2			8.5			8.8			9.2			9.6	

CONCRETE PLACEMENT

BARREL SIZE	BARREL DIMENSION			BELL JOINT QUANTITES (CY)		
	A	B	C	FOOTING	WALLS	SLAB
10' x 4'	12.5	14	9	2.808	1.047	2.372
10' x 5'	12.5	14	9	2.808	1.332	2.372
10' x 6'	12	14	9	2.808	1.618	2.360
10' x 7'	12.5	14.5	9	2.819	1.903	2.372
10' x 8'	12	14.5	9.5	2.834	2.189	2.372
10' x 9'	12.5	14.5	11	2.877	2.474	2.419
10' x 10'	12.5	14.5	12	2.905	2.760	2.443
10' x 11'	12.5	15	13	2.946	3.045	2.467
10' x 12'	12.5	15	14.5	2.989	3.331	2.502
12' x 4'	14.5	17	10.5	3.265	1.047	2.740
12' x 5'	14.5	17	10.5	3.265	1.332	2.740
12' x 6'	14.5	17	10	3.251	1.618	2.728
12' x 7'	14.5	17	10	3.251	1.903	2.728
12' x 8'	14.5	17	10	3.251	2.189	2.728
12' x 9'	14.5	17	11	3.279	2.474	2.752
12' x 10'	14.5	17	12	3.308	2.760	2.776
12' x 11'	14.5	17.5	13.5	3.363	3.045	2.812
12' x 12'	14.5	17.5	14.5	3.392	3.331	2.835

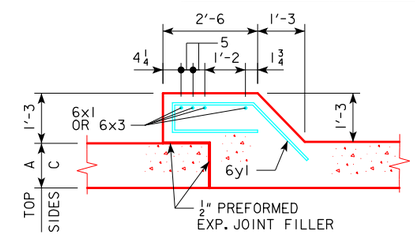

TOP & SIDES - BARS 6y1

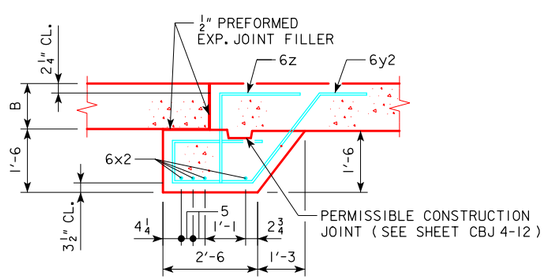

BOTTOM - BARS 6y2 & 6z

BENT BAR DETAILS

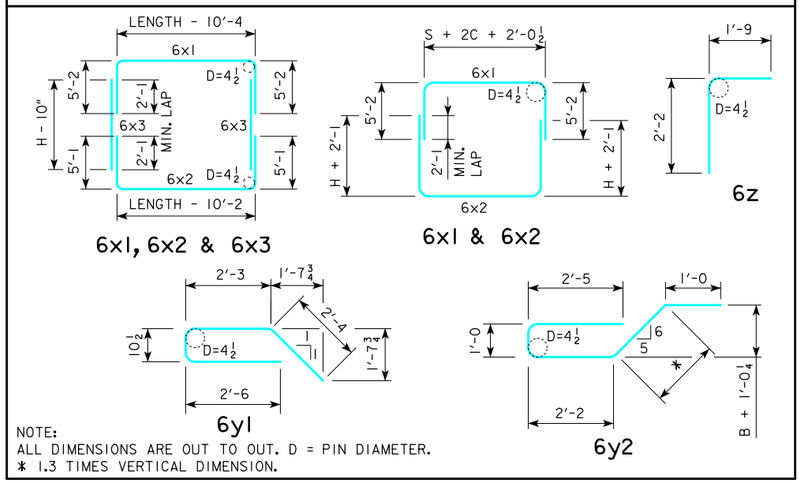

NOTES:

1. DIMENSIONS AND QUANTITIES SHOWN ARE BASED ON SLAB, FLOOR, AND WALL THICKNESSES (A, B, AND C, RESPECTIVELY). VALUES FOR THESE DIMENSIONS, UNDER VARYING FILL CONDITIONS, CAN BE FOUND ON THE RCB CULVERT BARREL DETAIL SHEETS.
2. CHANGE LENGTHS OF BARS 6x1, 6x2, 6z, AND ADJUST REINFORCING STEEL AND CONCRETE QUANTITIES ACCORDINGLY FOR SLAB, WALL, AND FLOOR THICKNESSES OTHER THAN SHOWN.
3. ALL BAR LENGTHS ARE ESTIMATED WITH A 2" CLEARANCE FROM CONCRETE EDGE TO OUTSIDE OF BAR, EXCEPT AS NOTED.
4. MATERIAL AND CONSTRUCTION TO BE IN ACCORDANCE WITH THE CURRENT STANDARD SPECIFICATIONS OF I.D.O.T.
5. SEE SHEET RCB GI-12 FOR GENERAL INFORMATION, SPECIFICATIONS, AND DESIGN STRESSES.
6. BARREL FLOOR BARS m1 & m9 ARE TO BE SHORTENED 6" IN LENGTH AT BELL JOINTS.

07-13
LATEST REVISION DATE

APPROVED BY BRIDGE ENGINEER

IOWA DOT Highway Division

STANDARD DESIGN

SINGLE REINFORCED CONCRETE BOX CULVERTS

APRIL, 2012

CULVERT BELL JOINTS

10' & 12' SPANS

CBJ 3-12

REVISED 07-13 - THE m9 BARS WERE ADDED TO NOTE NUMBER 6.
ENGLISHLRFDSIGNEDSINGLECULVERTS.DGN - CBJ 3-12 - THIS SHEET ISSUED 04-12.

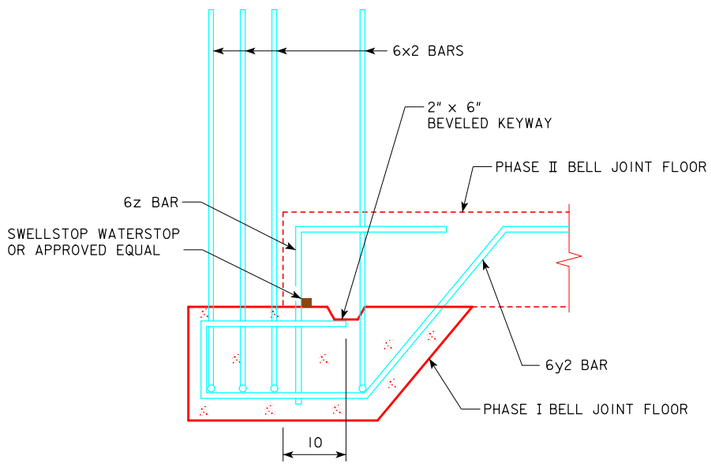

SECTION A-A

BELL JOINT AT FLOOR

COST FOR WATERSTOP CONSIDERED INCIDENTAL TO THE PROJECT.

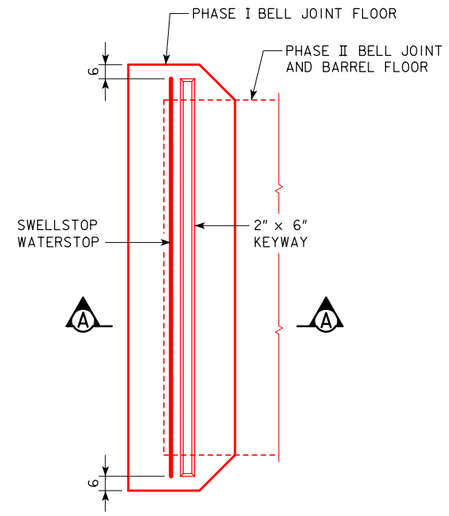

PLAN VIEW - PHASE I

(SHOWING PHASE I OF FLOOR BELL JOINT CONSTRUCTION)

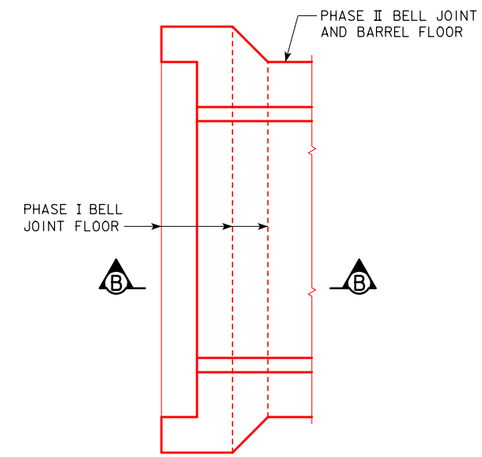

PLAN VIEW - PHASE II

(SHOWING PHASE II OF FLOOR BELL JOINT
AND BARREL FLOOR CONSTRUCTION)

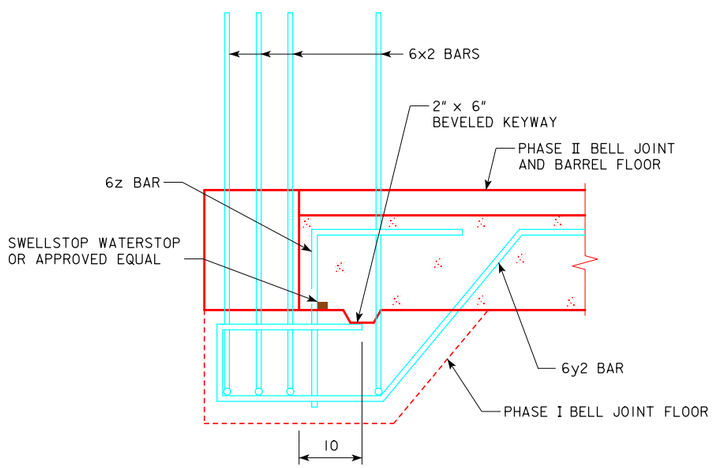

SECTION B-B

BELL JOINT AT FLOOR

COST FOR WATERSTOP CONSIDERED INCIDENTAL TO THE PROJECT.

NOTES:

1. THE DETAILS SHOWN ON THIS SHEET ARE AN OPTION FOR THE CONTRACTOR TO CONSTRUCT THE FLOOR OF THE BELL JOINT WITH A PERMISSIBLE CONSTRUCTION JOINT AS SHOWN.
2. REINFORCING STEEL WILL BE PLACED PRIOR TO PLACING THE PHASE I CONCRETE.
3. THE COST OF THE WATERSTOP IS CONSIDERED INCIDENTAL TO THE PROJECT.
4. A 2" x 6" BEVELED KEYWAY WILL BE FORMED TO THE DISTANCE SHOWN AND LOCATION NOTED BEFORE PLACING THE CONCRETE.
5. FOR DETAILS AND DIMENSIONS OF THE BELL JOINT REFER TO THE BELL JOINT STANDARD SHEETS.

LATEST REVISION DATE

APPROVED BY BRIDGE ENGINEER

IOWADOT Highway Division

STANDARD DESIGN

SINGLE REINFORCED CONCRETE BOX CULVERTS

APRIL, 2012

CULVERT BELL JOINTS

ALL SPANS

CBJ 4-12

ENGLISHLRFDSIGNEDSINGLECULVERTS.DGN - CBJ 4-12 - THIS SHEET ISSUED 04-12.