IOWA DOT
Highway Division

TRIPLE REINFORCED CONCRETE BOX CULVERT STANDARDS

GENERAL NOTES:

1. THE RCB CULVERT SECTIONS ARE DESIGNED FOR HL-93 LIVE LOAD AND EARTH FILLS OF VARYING HEIGHTS.
2. VERTICAL EARTH PRESSURE, EV=0.120 kcf.
   HORIZONTAL EARTH PRESSURE, EHmax = 0.060 kcf MAX, EHmin = 0.030 kcf.
3. THE RCB CULVERT SECTIONS ARE DESIGN FOR CLASS 1 EXPOSURE CONDITIONS EXCEPT:
   CLASS 2 EXPOSURE CONDITION IS UTILIZED FOR THE SLAB DESIGN IN 0' FILL INSTANCES.
4. ALL SLAB AND FLOOR REINFORCING STEEL IS TO BE SUPPORTED AT INTERVALS OF NOT MORE THAN 3'-0 IN EITHER DIRECTION AS OUTLINED IN THE STANDARD SPECIFICATIONS.
5. THE CLEAR DISTANCE FROM FACE OF CONCRETE TO NEAR EDGE OR END OF REINFORCING BAR TO BE 2" UNLESS OTHERWISE NOTED.
6. EXCEPT FOR DOWEL BARS 5r1 IN SLAB, LONGITUDINAL REINFORCING IS NOT TO EXTEND THRU THE CONSTRUCTION JOINTS.
7. FLOOR OF BARREL IS TO BE FINISHED SMOOTH. SIDES OF FOOTING ARE TO BE FORMED TO INSURE CORRECT LINE AND GRADE.
8. THE PERMISSIBLE CONSTRUCTION JOINT AT THE TOP OF THE WALLS MAY BE LOWERED AT THE CONTRACTOR'S OPTION WITH ENGINEER'S APPROVAL.
9. THE REINFORCEMENT SUPPLIED FOR THIS STRUCTURE SHALL BE GRADE 60 REINFORCEMENT IN ACCORDANCE WITH THE STANDARD SPECIFICATIONS. THE DESIGN STRESSES ARE BASED ON GRADE 60 REINFORCEMENT.
10. THE VERTICAL BARS IN THE WALLS MAY BE SPLICED ABOVE THE FOOTING AT THE CONTRACTOR'S OPTION AS FOLLOWS:

BAR SIZE NUMBER	4	5	6	7	8	9
MINIMUM SPLICE LENGTH	17"	21"	25"	31"	41"	51"

    THIS SPLICE, IF USED, WILL BE AT THE CONTRACTOR'S EXPENSE.
11. REINFORCING BAR CLEARANCES WILL BE AS FOLLOWS:
    EDGE CLEARANCES: 2" EXCEPT
      TOP OF FLOOR $2\frac{1}{4}$" TO NEAR TRANSVERSE REINFORCING BAR
      BOTTOM OF FLOOR $3\frac{1}{2}$" TO NEAR TRANSVERSE REINFORCING BAR
    END CLEARANCES:
      VERTICAL TOP 2"
      VERTICAL BOTTOM 3" OR $3\frac{1}{2}$" IF OVERALL HEIGHT OF THE CULVERT IS NOT TO A FULL INCH
      TRANSVERSE 2"
12. ALL CONSTRUCTION JOINTS SHALL BE FORMED WITH A BEVELED KEYWAY EXCEPT AT BELL JOINTS.
13. ALL BEVELED KEYWAYS SHALL BE CENTERED.
14. KEYWAY SIZE SHALL BE 2x4 EXCEPT AS FOLLOWS:
    KEYWAY BETWEEN THE FLOOR AND WALL SHALL BE 2x6 WHEN THE WALL IS GREATER THAN 10 INCHES WIDE.
15. KEYWAY DIMENSIONS SHOWN ON THE PLANS ARE BASED ON NOMINAL DIMENSIONS UNLESS STATED OTHERWISE. IN ADDITION, THE BEVEL USED ON THE KEYWAY SHALL BE LIMITED TO A MAXIMUM OF 10 DEGREES FROM VERTICAL.
16. IF 0' OF FILL IS SPECIFIED, DETAILS FOR PAVING NOTCH AND REFERENCE TO EPOXY COATING OF SLAB REINFORCING STEEL, IF APPLICABLE, SHALL BE INCLUDED IN THE FINAL PLANS.
17. ALL DIMENSIONS ARE IN FEET AND INCHES UNLESS OTHERWISE NOTED OR SHOWN.
18. SEE CURRENT STANDARD SPECIFICATIONS REGARDING CONCRETE FORM REMOVAL.
19. THESE CULVERT STANDARDS LABEL ALL REINFORCING STEEL WITH ENGLISH NOTATION (5a1 IS $\frac{5}{8}$ INCH DIAMETER BAR). ENGLISH REINFORCING STEEL RECEIVED IN THE FIELD MAY DISPLAY THE FOLLOWING "BAR DESIGNATION". THE "BAR DESIGNATION" IS THE STAMPED IMPRESSION ON THE REINFORCING BARS, AND IS EQUIVALENT TO THE BAR DIAMETER IN MILLIMETERS.

ENGLISH SIZE	4	5	6	7	8	9
BAR DESIGNATION	13	16	19	22	25	29

20. IN THE EVENT THE SLAB THICKNESS AT THE BARREL END SECTION EXCEEDS 18 INCHES, THE CULVERT PARAPET SHALL EXTEND A MINIMUM OF 6 INCHES ABOVE THE TOP OF THE CULVERT SLAB. REFER TO THE CULVERT DESIGN MANUAL FOR INSTRUCTIONS. THESE DETAILS ARE TO BE INCLUDED IN THE DESIGN PLANS TO ADDRESS THESE SITUATIONS.

INDEX FOR TRIPLE CULVERT STANDARDS:

TRRCB G1-12 INDEX & GENERAL NOTES
TRRCB G2-12 TYPICAL CULVERT BARREL DETAILS
TRRCB 10-4-12 CULVERT BARREL DETAILS, 10 x 4 BARREL SECTIONS
TRRCB 10-5-12 CULVERT BARREL DETAILS, 10 x 5 BARREL SECTIONS
TRRCB 10-6-12 CULVERT BARREL DETAILS, 10 x 6 BARREL SECTIONS
TRRCB 10-7-12 CULVERT BARREL DETAILS, 10 x 7 BARREL SECTIONS, SHEET 1 OF 2
TRRCB 10-7-12 CULVERT BARREL DETAILS, 10 x 7 BARREL SECTIONS, SHEET 2 OF 2
TRRCB 10-8-12 CULVERT BARREL DETAILS, 10 x 8 BARREL SECTIONS, SHEET 1 OF 2
TRRCB 10-8-12 CULVERT BARREL DETAILS, 10 x 8 BARREL SECTIONS, SHEET 2 OF 2
TRRCB 10-9-12 CULVERT BARREL DETAILS, 10 x 9 BARREL SECTIONS, SHEET 1 OF 2
TRRCB 10-9-12 CULVERT BARREL DETAILS, 10 x 9 BARREL SECTIONS, SHEET 2 OF 2
TRRCB 10-10-12 CULVERT BARREL DETAILS, 10 x 10 BARREL SECTIONS, SHEET 1 OF 2
TRRCB 10-10-12 CULVERT BARREL DETAILS, 10 x 10 BARREL SECTIONS, SHEET 2 OF 2
TRRCB 10-11-12 CULVERT BARREL DETAILS, 10 x 11 BARREL SECTIONS, SHEET 1 OF 2
TRRCB 10-11-12 CULVERT BARREL DETAILS, 10 x 11 BARREL SECTIONS, SHEET 2 OF 2
TRRCB 10-12-12 CULVERT BARREL DETAILS, 10 x 12 BARREL SECTIONS, SHEET 1 OF 2
TRRCB 10-12-12 CULVERT BARREL DETAILS, 10 x 12 BARREL SECTIONS, SHEET 2 OF 2
TRRCB 12-4-12 CULVERT BARREL DETAILS, 12 x 4 BARREL SECTIONS
TRRCB 12-5-12 CULVERT BARREL DETAILS, 12 x 5 BARREL SECTIONS
TRRCB 12-6-12 CULVERT BARREL DETAILS, 12 x 6 BARREL SECTIONS
TRRCB 12-7-12 CULVERT BARREL DETAILS, 12 x 7 BARREL SECTIONS, SHEET 1 OF 2
TRRCB 12-7-12 CULVERT BARREL DETAILS, 12 x 7 BARREL SECTIONS, SHEET 2 OF 2
TRRCB 12-8-12 CULVERT BARREL DETAILS, 12 x 8 BARREL SECTIONS, SHEET 1 OF 2
TRRCB 12-8-12 CULVERT BARREL DETAILS, 12 x 8 BARREL SECTIONS, SHEET 2 OF 2
TRRCB 12-9-12 CULVERT BARREL DETAILS, 12 x 9 BARREL SECTIONS, SHEET 1 OF 2
TRRCB 12-9-12 CULVERT BARREL DETAILS, 12 x 9 BARREL SECTIONS, SHEET 2 OF 2
TRRCB 12-10-12 CULVERT BARREL DETAILS, 12 x 10 BARREL SECTIONS, SHEET 1 OF 2
TRRCB 12-10-12 CULVERT BARREL DETAILS, 12 x 10 BARREL SECTIONS, SHEET 2 OF 2
TRRCB 12-11-12 CULVERT BARREL DETAILS, 12 x 11 BARREL SECTIONS, SHEET 1 OF 2
TRRCB 12-11-12 CULVERT BARREL DETAILS, 12 x 11 BARREL SECTIONS, SHEET 2 OF 2
TRRCB 12-12-12 CULVERT BARREL DETAILS, 12 x 12 BARREL SECTIONS, SHEET 1 OF 2
TRRCB 12-12-12 CULVERT BARREL DETAILS, 12 x 12 BARREL SECTIONS, SHEET 2 OF 2
TRH 0-1-12 FLARED WING HEADWALLS, 0° SKEW, DIMENSION PLAN & TABLE
TRH 0-2-12 FLARED WING HEADWALLS, 0° SKEW, APRON DETAILS
TRH 0-3-12 FLARED WING HEADWALLS, 0° SKEW, PARAPET & CURTAIN WALL DETAILS
TRH 0-4-12 FLARED WING HEADWALLS, 0° SKEW, WINGWALL DETAILS
TRH 0-5-12 FLARED WING HEADWALLS, 0° SKEW, QUANTITIES TABLE
TRH 0-6-12 FLARED WING HEADWALLS, 0° SKEW, QUANTITIES TABLE
TRH 15-1-12 FLARED WING HEADWALLS, 15° SKEW, DIMENSION PLAN
TRH 15-2-12 FLARED WING HEADWALLS, 15° SKEW, DIMENSION TABLE
TRH 15-3-12 FLARED WING HEADWALLS, 15° SKEW, APRON DETAILS
TRH 15-4-12 FLARED WING HEADWALLS, 15° SKEW, APRON DETAILS
TRH 15-5-12 FLARED WING HEADWALLS, 15° SKEW, PARAPET & CURTAIN WALL DETAILS
TRH 15-6-12 FLARED WING HEADWALLS, 15° SKEW, WINGWALL DETAILS
TRH 15-7-12 FLARED WING HEADWALLS, 15° SKEW, QUANTITIES TABLE
TRH 15-8-12 FLARED WING HEADWALLS, 15° SKEW, QUANTITIES TABLE
TRH 15-9-12 FLARED WING HEADWALLS, 15° SKEW, QUANTITIES TABLE
TRH 30-1-12 FLARED WING HEADWALLS, 30° SKEW, DIMENSION PLAN
TRH 30-2-12 FLARED WING HEADWALLS, 30° SKEW, DIMENSION TABLE
TRH 30-3-12 FLARED WING HEADWALLS, 30° SKEW, APRON DETAILS
TRH 30-4-12 FLARED WING HEADWALLS, 30° SKEW, APRON DETAILS
TRH 30-5-12 FLARED WING HEADWALLS, 30° SKEW, PARAPET & CURTAIN WALL DETAILS
TRH 30-6-12 FLARED WING HEADWALLS, 30° SKEW, WINGWALL DETAILS
TRH 30-7-12 FLARED WING HEADWALLS, 30° SKEW, QUANTITIES TABLE
TRH 30-8-12 FLARED WING HEADWALLS, 30° SKEW, QUANTITIES TABLE
TRH 30-9-12 FLARED WING HEADWALLS, 30° SKEW, QUANTITIES TABLE
TRH 45-1-12 FLARED WING HEADWALLS, 45° SKEW, DIMENSION PLAN
TRH 45-2-12 FLARED WING HEADWALLS, 45° SKEW, DIMENSION TABLE
TRH 45-3-12 FLARED WING HEADWALLS, 45° SKEW, APRON DETAILS
TRH 45-4-12 FLARED WING HEADWALLS, 45° SKEW, APRON DETAILS
TRH 45-5-12 FLARED WING HEADWALLS, 45° SKEW, PARAPET & CURTAIN WALL DETAILS
TRH 45-6-12 FLARED WING HEADWALLS, 45° SKEW, WINGWALL DETAILS
TRH 45-7-12 FLARED WING HEADWALLS, 45° SKEW, QUANTITIES TABLE
TRH 45-8-12 FLARED WING HEADWALLS, 45° SKEW, QUANTITIES TABLE
TRH 45-9-12 FLARED WING HEADWALLS, 45° SKEW, QUANTITIES TABLE
TRCBJ 1-12 CULVERT BELL JOINTS, 10' SPANS
TRCBJ 2-12 CULVERT BELL JOINTS, 12' SPANS
TRCBJ 3-12 CULVERT BELL JOINTS, ALL SPANS

SPECIFICATIONS:

DESIGN:
AASHTO LRFD BRIDGE DESIGN SPECIFICATIONS, 5TH ED., SERIES OF 2010.

CONSTRUCTION:
IOWA DEPARTMENT OF TRANSPORTATION STANDARD SPECIFICATIONS FOR HIGHWAY AND BRIDGE CONSTRUCTION, CURRENT SERIES, PLUS APPLICABLE GENERAL SUPPLEMENTAL SPECIFICATIONS, DEVELOPMENTAL SPECIFICATIONS, SUPPLEMENTAL SPECIFICATIONS AND SPECIAL PROVISIONS

DESIGN STRESSES:

DESIGN STRESSES FOR THE FOLLOWING MATERIALS ARE IN ACCORDANCE WITH THE AASHTO LRFD BRIDGE DESIGN SPECIFICATIONS, 5TH ED., SERIES OF 2010:
REINFORCING STEEL IN ACCORDANCE WITH AASHTO LRFD SECTION 5, GRADE 60.
CONCRETE IN ACCORDANCE WITH AASHTO LRFD SECTION 5, f'c = 4.0 KSI.

07-2016
LATEST REVISION DATE

APPROVED BY BRIDGE ENGINEER

IOWA DOT Highway Division

STANDARD DESIGN
TRIPLE REINFORCED CONCRETE BOX CULVERTS
APRIL, 2012

INDEX & GENERAL NOTES

TRRCB G1-12

REVISED 10-12 - DELETED THE REFERENCE TO THE DESIGN MANUAL IN NOTE 19 PERTAINING TO DETAILS IN THE DESIGN MANUAL.
REVISED 1-16 - UPDATED NOTE 17 PERTAINING TO CONCRETE FORMS. (OLD NOTE: REMAINING IN PLACE 5 DAYS OR LONGER, EXCEPT MIN. CONC. FLEXURAL STRENGTH BEFORE REMOVAL SHALL BE 575 PSI).
REVISED 07-2016 - ADDED THE DESIGN VERTICAL AND HORIZONTAL EARTH PRESSURES AND RENUMBERED THE GENERAL NOTES. CHANGED DISTANCE IN NOTE #20 FROM 20 INCHES TO 18.
ENGLISHLRFDSIGNEDTRIPLECULVERTS.DGN - TRRCB G1-12 - THIS SHEET ISSUED 04-12.

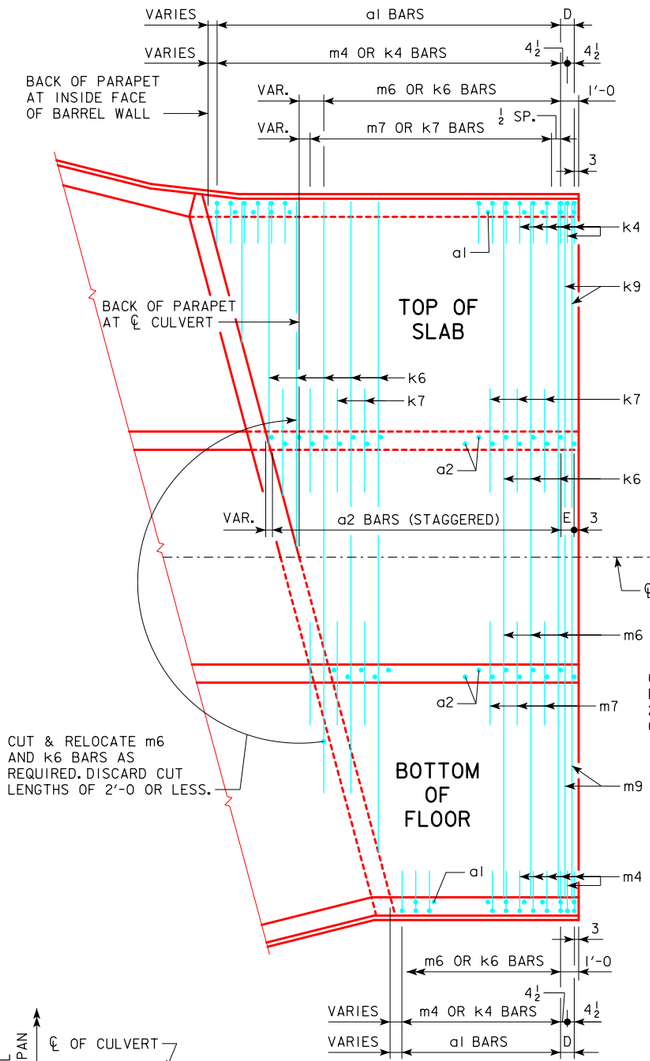

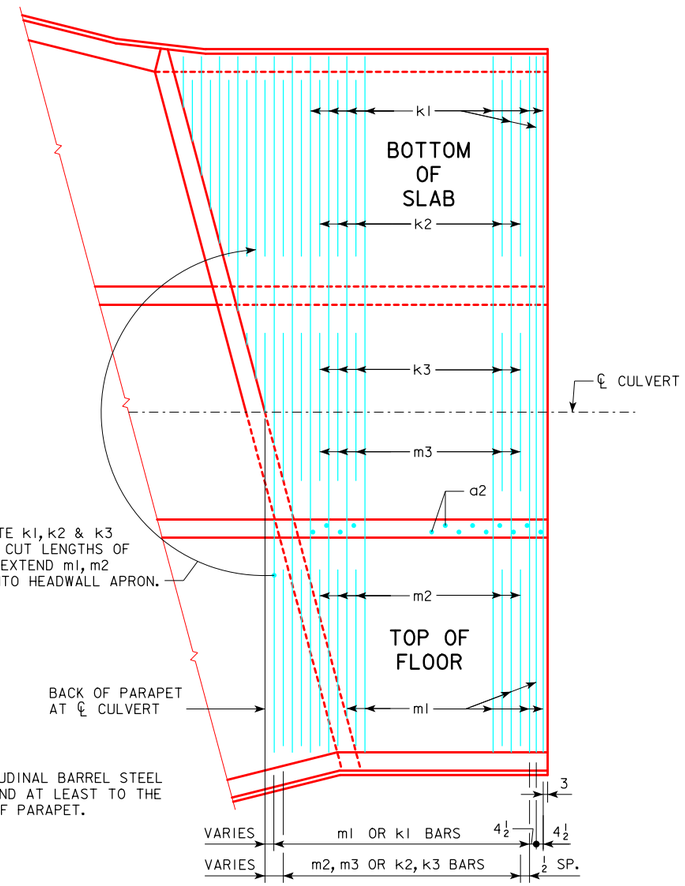

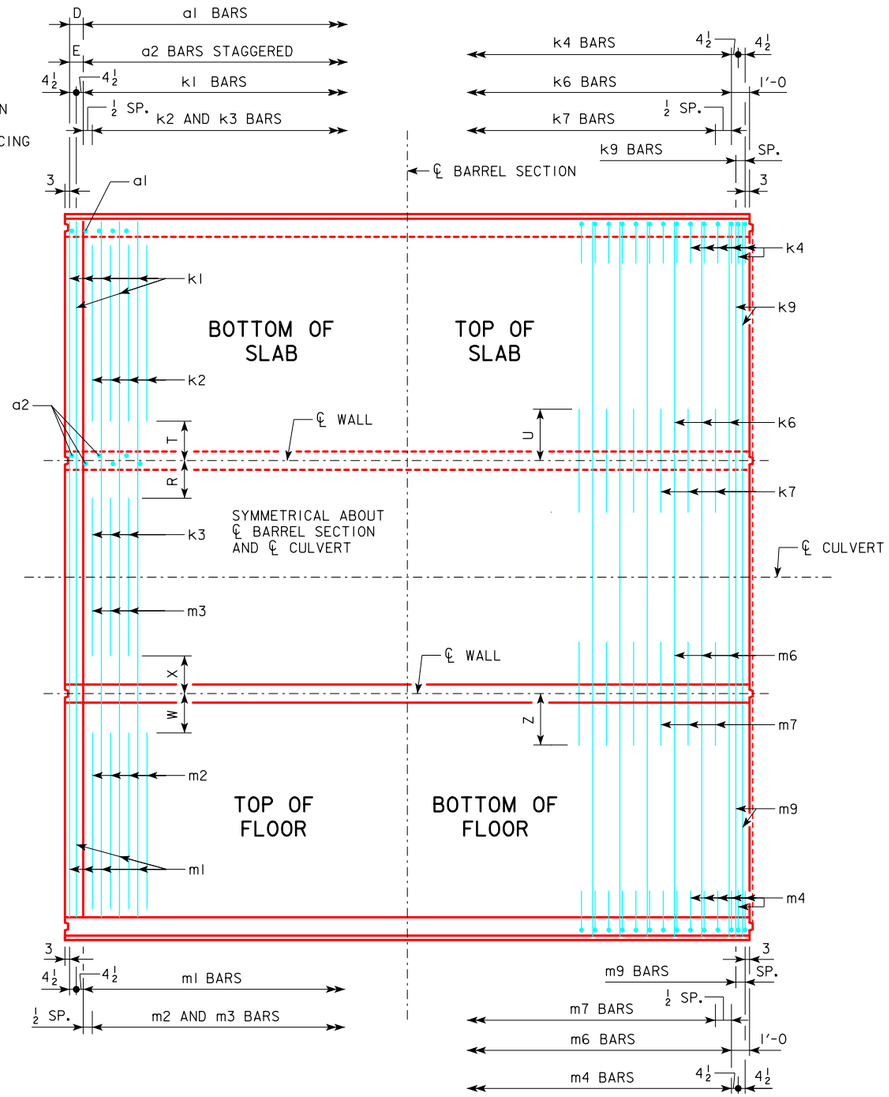

END SECTION PLAN VIEWS

(KEYWAYS NOT SHOWN)

NOTE:
END SECTION DETAILS SHOWN ARE FOR A 15° SKEW BARREL. USE FOR SKEWS OF 30° & 45° BY INCREASING THE NUMBER OF TRANSVERSE REINFORCING BARS REQUIRED TO BE CUT AND RELOCATED.

NOTE:
DIMENSIONS LISTED ON THIS SHEET TO BE USED IN CONJUNCTION WITH DIMENSIONS AND QUANTITIES FOR BARREL SECTION SHEETS.

STANDARD SECTION PLAN VIEW

(KEYWAY IS TO BE OMITTED WHEN BELL JOINTS ARE USED)

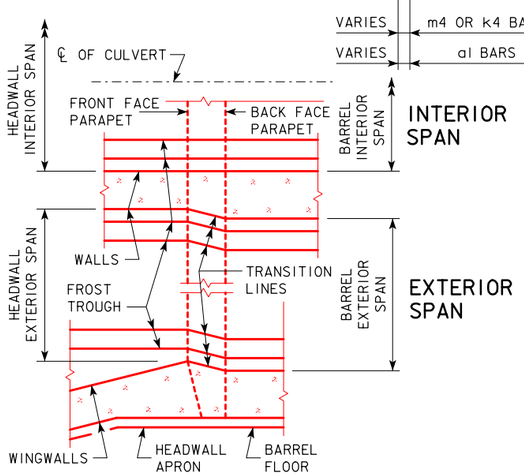

TRANSITION WALL DETAILS

5r1 BARS - ONE CONST. JT.		
SPAN	NO.	WEIGHT (LB)
10'-0	34	124
12'-0	40	146

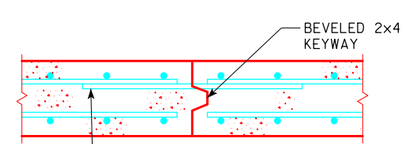

ONE SET OF 5r1 x 3'-6 DOWEL BARS @ 1'-0 SPACING REQUIRED IN SLAB AT ALL CULVERT BARREL JOINTS, EXCEPT JOINTS WITH BELL JOINTS. SEE TABLE FOR NUMBER REQUIRED AND TOTAL WEIGHT.

TOP SLAB CONSTRUCTION JOINT DETAIL

07-14
LATEST REVISION DATE

APPROVED BY BRIDGE ENGINEER

IOWA DOT Highway Division

STANDARD DESIGN

TRIPLE REINFORCED CONCRETE BOX CULVERTS

APRIL, 2012

TYPICAL CULVERT BARREL DETAILS

TRRCB G2-12

REVISED 07-14 - TRANSITION WALL DETAILS.
ENGLISHLRFDSIGNEDTRIPLECULVERTS.DGN - TRRCB G2-12 - THIS SHEET ISSUED 04-12.

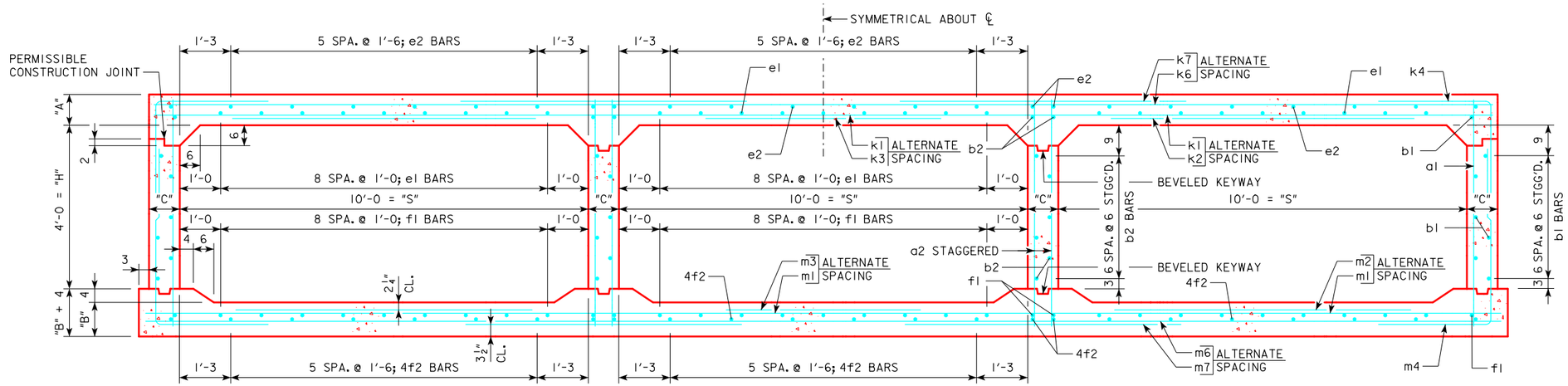

TRIPLE 10 x 4 BARREL SECTION

BENT BAR DETAIL

BARS	D
4	3
5	3 3/4
6	4 1/2

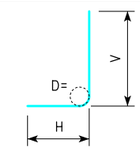

k4 & m4

NOTE:
ALL DIMENSIONS ARE OUT TO OUT.
D = PIN DIAMETER.

NOTES:

1. DIMENSIONS LISTED ON THIS SHEET TO BE USED IN CONJUNCTION WITH SHEET TRRCB G2-12.
2. DIMENSIONS "A", "B", "C", "D", "E", AND "SP." LISTED IN THE BAR LIST ARE IN INCHES.

VARIABLE DIMENSIONS AND QUANTITIES FOR TRIPLE 10 x 4 BARREL SECTIONS

DIMENSIONS

FILL	S	H	A	B	C	D	E	R	T	U	W	X	Z
0	10	4	13	10	9	9	9	0'-0	0'-0	6'-5	2'-10	4'-4	3'-11
1	10	4	12.5	10	9	6	9	0'-5	0'-0	6'-1	2'-10	4'-4	3'-11
2	10	4	9.5	10	9	6	9	0'-9	0'-9	4'-9	2'-5	3'-8	3'-9
3-6	10	4	9	10	9	9	9	1'-2	0'-11	4'-3	2'-2	2'-10	3'-6
7-8	10	4	8	10	9	9	9	2'-6	2'-1	3'-6	2'-1	3'-0	3'-4
9-10	10	4	9	11	9	9	9	2'-8	2'-1	3'-5	2'-1	3'-0	3'-7
11-12	10	4	9.5	11.5	9	9	9	2'-7	1'-9	3'-6	2'-7	3'-6	3'-5
13-15	10	4	11.5	13.5	9	9	9	2'-9	1'-9	3'-5	2'-4	4'-2	3'-3
16-17	10	4	12.5	14.5	9	9	9	2'-9	1'-5	3'-4	1'-11	4'-4	3'-4
18-19	10	4	13.5	15.5	9	9	9	4'-1	1'-8	3'-4	1'-9	3'-11	3'-4
20-21	10	4	14	16	9	9	9	3'-7	1'-5	3'-4	1'-8	4'-3	3'-5
22-23	10	4	15	17.5	9	9	9	4'-3	1'-6	3'-5	1'-6	4'-3	3'-6
24-25	10	4	16.5	18.5	9	9	9	4'-4	1'-1	3'-6	1'-1	4'-3	3'-7

BAR LIST

FILL	a1 SIZE	a1 SP.	a1 L	a2 SIZE	a2 SP.	a2 L	b1 SIZE	b1 SP.	b1 NO.	b2 SIZE	b2 SP.	b2 NO.	e1 SIZE	e1 SP.	e1 NO.	e2 SIZE	e2 SP.	e2 NO.	f1 SIZE	f1 SP.	f1 NO.	f2 SIZE	f2 SP.	f2 NO.	k1 SIZE	k1 SP.	k1 L	k2 SIZE	k2 SP.	k2 L	k3 SIZE	k3 SP.	k3 L	k4 SIZE	k4 SP.	k4 L	k4 H	k4 V	k6 SIZE	k6 SP.	k6 L	k7 SIZE	k7 SP.	k7 L
0	4	12	5'-10	6	9	5'-10	4	6	16	4	6	18	4	12	27	4	18	24	4	12	33	4	18	24	6	18	32'-8	6	18	10'-11	5	18	10'-9	4	6	6'-2	2'-11	3'-3	5	18	32'-8	6	18	12'-10
1	4	6	5'-9	6	9	5'-9	4	6	16	4	6	18	4	12	27	4	18	24	4	12	33	4	18	24	6	18	32'-8	6	18	10'-11	5	18	9'-11	4	6	6'-6	3'-3	3'-3	5	18	32'-8	6	18	12'-6
2	4	6	5'-6	7	9	5'-6	4	6	16	4	6	18	4	12	27	4	18	24	4	12	33	4	18	24	6	18	32'-8	6	18	10'-2	5	18	9'-3	5	6	6'-0	3'-0	3'-0	4	9	32'-8	4	9	11'-0
3-6	4	12	5'-6	7	9	5'-6	4	6	16	4	6	18	4	12	27	4	18	24	4	12	33	4	18	24	6	18	32'-8	6	18	9'-9	5	18	8'-5	5	6	5'-10	2'-11	2'-11	5	12	32'-8	5	12	9'-1
7-8	4	12	5'-5	6	9	5'-5	4	6	16	4	6	18	4	12	27	4	18	24	4	12	33	4	18	24	5	12	32'-8	5	12	7'-5	4	12	5'-9	5	6	5'-8	2'-10	2'-10	5	12	32'-8	6	12	7'-0
9-10	4	12	5'-7	6	9	5'-7	4	6	16	4	6	18	4	12	27	4	18	24	4	12	33	4	18	24	5	12	32'-8	5	12	7'-9	4	12	5'-5	6	9	5'-11	2'-8	3'-3	5	12	32'-8	6	12	6'-11
11-12	4	12	5'-8	6	9	5'-8	4	6	16	4	6	18	4	12	27	4	18	24	4	12	33	4	18	24	5	12	32'-8	5	12	8'-4	4	12	5'-7	5	6	5'-4	2'-5	2'-11	4	12	32'-8	7	12	7'-1
13-15	5	12	6'-0	6	9	6'-0	4	6	16	4	6	18	4	12	27	4	18	24	4	12	33	4	18	24	5	12	32'-8	5	12	8'-7	4	12	5'-3	4	6	5'-3	2'-2	3'-1	4	12	32'-8	7	12	7'-1
16-17	4	9	6'-2	6	9	6'-2	4	6	16	4	6	18	4	12	27	4	18	24	4	12	33	4	18	24	5	12	32'-8	5	12	9'-4	4	12	5'-3	4	6	5'-4	2'-2	3'-2	4	12	32'-8	7	12	7'-0
18-19	4	12	6'-4	6	9	6'-4	4	6	16	4	6	18	4	12	27	4	18	24	4	12	33	4	18	24	5	9	32'-8	4	9	9'-0	4	9	2'-7	6	12	5'-9	2'-2	3'-7	4	12	32'-8	7	12	7'-1
20-21	4	12	6'-5	6	9	6'-5	4	6	16	4	6	18	4	12	27	4	18	24	4	12	33	4	18	24	7	18	32'-8	6	18	9'-5	4	18	3'-7	6	12	5'-10	2'-2	3'-8	5	9	32'-8	5	9	7'-2
22-23	4	12	6'-7	6	9	6'-7	4	6	16	4	6	18	4	12	27	4	18	24	4	12	33	4	18	24	6	12	32'-8	5	12	9'-5	4	12	2'-3	4	6	5'-8	2'-3	3'-5	5	9	32'-8	5	9	7'-4
24-25	4	12	6'-10	6	9	6'-10	4	6	16	4	6	18	4	12	27	4	18	24	4	12	33	4	18	24	6	12	32'-8	5	12	9'-10	4	12	2'-1	4	6	5'-10	2'-4	3'-6	4	12	32'-8	7	12	7'-7

BAR LIST

FILL	k9 SIZE	k9 SP.	k9 L	m1 SIZE	m1 SP.	m1 L	m2 SIZE	m2 SP.	m2 L	m3 SIZE	m3 SP.	m3 L	m4 SIZE	m4 SP.	m4 L	m4 H	m4 V	m6 SIZE	m6 SP.	m6 L	m7 SIZE	m7 SP.	m7 L	m9 SIZE	m9 SP.	m9 L
0	6	4.5	32'-8	5	12	33'-2	4	12	6'-2	4	12	2'-1	5	6	8'-6	4'-3	4'-3	5	18	33'-2	7	18	7'-9	7	4.5	33'-2
1	6	4.5	32'-8	5	12	33'-2	4	12	5'-11	4	12	2'-1	4	6	8'-0	3'-9	4'-3	5	18	33'-2	7	18	7'-9	7	4.5	33'-2
2	4	4.5	32'-8	5	12	33'-2	4	12	6'-8	4	12	3'-5	4	6	7'-3	3'-0	4'-3	5	18	33'-2	7	18	7'-7	7	4.5	33'-2
3-6	5	4.5	32'-8	4	9	33'-2	4	9	7'-3	4	9	5'-1	5	6	7'-2	2'-11	4'-3	4	12	33'-2	6	12	7'-2	6	4.5	33'-2
7-8	6	4.5	32'-8	5	12	33'-2	5	12	7'-3	4	12	4'-9	5	6	7'-0	2'-9	4'-3	5	12	33'-2	6	12	6'-9	6	4.5	33'-2
9-10	6	4.5	32'-8	5	12	33'-2	5	12	7'-8	4	12	4'-9	6	9	7'-0	2'-8	4'-4	5	18	33'-2	8	18	7'-4	8	4.5	33'-2
11-12	7	4.5	32'-8	5	9	33'-2	4	9	6'-10	4	9	3'-9	5	6	6'-10	2'-5	4'-5	4	12	33'-2	7	12	7'-0	7	4.5	33'-2
13-15	7	4.5	32'-8	5	9	33'-2	4	9	7'-5	4	9	2'-5	4	6	6'-10	2'-3	4'-7	5	12	33'-2	6	12	6'-10	6	4.5	33'-2
16-17	7	4.5	32'-8	5	9	33'-2	4	9	8'-4	4	9	2'-1	4	6	6'-10	2'-2	4'-8	5	12	33'-2	6	12	7'-0	6	4.5	33'-2
18-19	7	4.5	32'-8	5	9	33'-2	4	9	9'-0	4	9	2'-11	6	12	7'-0	2'-3	4'-9	5	12	33'-2	6	12	7'-2	6	4.5	33'-2
20-21	5	4.5	32'-8	6	12	33'-2	5	12	9'-2	4	12	2'-3	6	12	7'-0	2'-3	4'-9	4	12	33'-2	7	12	7'-3	7	4.5	33'-2
22-23	5	4.5	32'-8	6	12	33'-2	5	12	9'-6	4	12	2'-3	4	6	7'-2	2'-3	4'-11	4	12	33'-2	7	12	7'-6	7	4.5	33'-2
24-25	7	4.5	32'-8	6	12	33'-2	5	12	9'-11	4	12	2'-3	4	6	7'-4	2'-4	5'-0	4	12	33'-2	7	12	7'-9	7	4.5	33'-2

QUANTITIES

FILL	CONCRETE (CY/FT) SLAB	FLOOR	WALLS	TOTAL	STEEL (LB/FT)
0	1.405	1.115	0.396	2.916	391.66
1	1.354	1.115	0.396	2.865	383.84
2	1.049	1.115	0.396	2.560	393.11
3-6	0.998	1.115	0.396	2.509	397.55
7-8	0.896	1.115	0.396	2.407	402.89
9-10	0.998	1.219	0.396	2.613	404.11
11-12	1.049	1.270	0.396	2.715	407.26
13-15	1.252	1.477	0.396	3.125	397.66
16-17	1.354	1.581	0.396	3.331	399.68
18-19	1.456	1.684	0.396	3.536	415.34
20-21	1.507	1.736	0.396	3.639	437.03
22-23	1.609	1.891	0.396	3.896	435.82
24-25	1.762	1.994	0.396	4.152	431.39

LATEST REVISION DATE

APPROVED BY BRIDGE ENGINEER

IOWA DOT Highway Division

STANDARD DESIGN

TRIPLE REINFORCED CONCRETE BOX CULVERTS

APRIL, 2012

CULVERT BARREL DETAILS

10 x 4 BARREL SECTIONS

TRRCB 10-4-12

ENGLISHLRFDSIGNEDTRIPLECULVERTS.DGN - TRRCB 10-4-12 - THIS SHEET ISSUED 04-12.

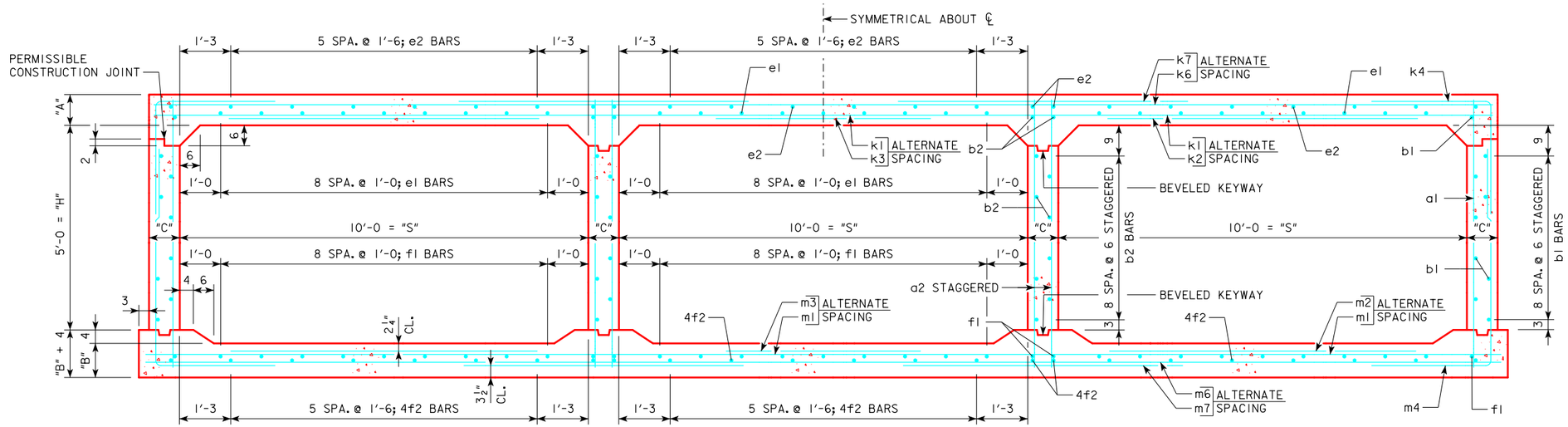

TRIPLE 10 x 5 BARREL SECTION

BENT BAR DETAIL

BARS	D
4	3
5	3 3/4
6	4 1/2

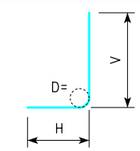

k4 & m4

NOTE:
ALL DIMENSIONS ARE OUT TO OUT.
D = PIN DIAMETER.

NOTES:

1. DIMENSIONS LISTED ON THIS SHEET TO BE USED IN CONJUNCTION WITH SHEET TRRCB G2-12.
2. DIMENSIONS "A", "B", "C", "D", "E", AND "SP." LISTED IN THE BAR LIST ARE IN INCHES.

VARIABLE DIMENSIONS AND QUANTITIES FOR TRIPLE 10 x 5 BARREL SECTIONS

DIMENSIONS

FILL	S	H	A	B	C	D	E	R	T	U	W	X	Z
0	10	5	13	10.5	9	6	9	0'-0	0'-0	6'-5	2'-10	4'-4	3'-11
1	10	5	12.5	10	9	6	9	0'-7	0'-0	6'-5	2'-9	4'-4	3'-10
2	10	5	9.5	10	9	6	9	0'-11	0'-9	4'-11	2'-2	3'-3	3'-9
3-6	10	5	9	10	9	6	9	1'-7	1'-2	4'-4	2'-4	3'-2	3'-6
7-8	10	5	8	10	9	9	9	2'-9	2'-0	3'-6	2'-1	3'-0	3'-4
9-10	10	5	9	10.5	9	9	9	2'-8	2'-1	3'-5	2'-9	3'-7	3'-2
11-12	10	5	9.5	12	9	6	9	2'-7	2'-0	3'-5	1'-9	3'-2	3'-3
13-15	10	5	11.5	13.5	9	9	9	3'-0	1'-9	3'-5	2'-4	4'-2	3'-3
16-17	10	5	12.5	14.5	9	9	9	4'-0	1'-10	3'-4	1'-10	4'-4	3'-4
18-19	10	5	13.5	15.5	9	9	9	4'-1	1'-8	3'-4	1'-8	3'-11	3'-4
20-21	10	5	14.5	16.5	9	9	9	4'-1	1'-6	3'-4	1'-8	4'-3	3'-5
22-23	10	5	15	17.5	9	9	9	4'-2	1'-6	3'-5	1'-6	4'-3	3'-6
24-25	10	5	16.5	18.5	9	9	9	4'-4	1'-0	3'-6	1'-1	4'-3	3'-6

BAR LIST

FILL	a1 SIZE	a1 SP.	a1 L	a2 SIZE	a2 SP.	a2 L	b1 SIZE	b1 SP.	b1 NO.	b2 SIZE	b2 SP.	b2 NO.	e1 SIZE	e1 SP.	e1 NO.	e2 SIZE	e2 SP.	e2 NO.	f1 SIZE	f1 SP.	f1 NO.	f2 SIZE	f2 SP.	f2 NO.	k1 SIZE	k1 SP.	k1 L	k2 SIZE	k2 SP.	k2 L	k3 SIZE	k3 SP.	k3 L	k4 SIZE	k4 SP.	k4 L	k4 H	k4 V	k6 SIZE	k6 SP.	k6 L	k7 SIZE	k7 SP.	k7 L
0	4	6	6'-10	6	9	6'-10	4	6	20	4	6	22	4	12	27	4	18	24	4	12	33	4	18	24	6	18	32'-8	6	18	10'-11	5	18	10'-9	4	6	6'-6	3'-3	3'-3	5	18	32'-8	6	18	12'-10
1	4	6	6'-9	6	9	6'-9	4	6	20	4	6	22	4	12	27	4	18	24	4	12	33	4	18	24	6	18	32'-8	6	18	10'-11	5	18	9'-7	4	6	6'-6	3'-3	3'-3	5	18	32'-8	6	18	12'-10
2	4	6	6'-6	6	9	6'-6	4	6	20	4	6	22	4	12	27	4	18	24	4	12	33	4	18	24	6	18	32'-8	6	18	10'-2	5	18	8'-11	5	6	6'-0	3'-0	3'-0	4	9	32'-8	4	9	11'-2
3-6	4	6	6'-6	6	9	6'-6	4	6	20	4	6	22	4	12	27	4	18	24	4	12	33	4	18	24	5	12	32'-8	5	12	9'-4	4	12	7'-7	5	6	5'-10	2'-11	2'-11	5	12	32'-8	5	12	9'-6
7-8	4	12	6'-5	6	9	6'-5	4	6	20	4	6	22	4	12	27	4	18	24	4	12	33	4	18	24	5	12	32'-8	5	12	7'-7	4	12	5'-3	5	6	5'-8	2'-10	2'-10	5	12	32'-8	6	12	7'-1
9-10	4	12	6'-6	6	9	6'-6	4	6	20	4	6	22	4	12	27	4	18	24	4	12	33	4	18	24	5	12	32'-8	5	12	7'-8	4	12	5'-5	5	6	5'-6	2'-7	2'-11	5	12	32'-8	6	12	6'-11
11-12	4	6	6'-8	6	9	6'-8	4	6	20	4	6	22	4	12	27	4	18	24	4	12	33	4	18	24	5	12	32'-8	5	12	8'-1	4	12	5'-7	5	6	5'-6	2'-6	3'-0	4	12	32'-8	7	12	7'-1
13-15	5	12	7'-0	6	9	7'-0	4	6	20	4	6	22	4	12	27	4	18	24	4	12	33	4	18	24	5	12	32'-8	5	12	8'-8	4	12	4'-9	4	6	5'-4	2'-3	3'-1	4	12	32'-8	7	12	7'-1
16-17	4	9	7'-2	6	9	7'-2	4	6	20	4	6	22	4	12	27	4	18	24	4	12	33	4	18	24	5	9	32'-8	4	9	8'-5	4	9	2'-9	4	6	5'-5	2'-3	3'-2	4	12	32'-8	7	12	7'-1
18-19	4	12	7'-4	6	9	7'-4	4	6	20	4	6	22	4	12	27	4	18	24	4	12	33	4	18	24	5	9	32'-8	4	9	9'-1	4	9	2'-7	6	12	5'-10	2'-3	3'-7	4	12	32'-8	7	12	7'-1
20-21	4	12	7'-6	6	9	7'-6	4	6	20	4	6	22	4	12	27	4	18	24	4	12	33	4	18	24	5	9	32'-8	4	9	9'-5	4	9	2'-7	6	12	6'-0	2'-4	3'-8	4	12	32'-8	7	12	7'-2
22-23	4	12	7'-7	6	9	7'-7	4	6	20	4	6	22	4	12	27	4	18	24	4	12	33	4	18	24	6	12	32'-8	5	12	9'-5	4	12	2'-5	6	12	6'-1	2'-4	3'-9	5	9	32'-8	5	9	7'-4
24-25	4	12	7'-10	6	9	7'-10	4	6	20	4	6	22	4	12	27	4	18	24	4	12	33	4	18	24	6	12	32'-8	5	12	9'-11	4	12	2'-1	6	12	6'-3	2'-5	3'-10	4	12	32'-8	7	12	7'-7

BAR LIST

FILL	k9 SIZE	k9 SP.	k9 L	m1 SIZE	m1 SP.	m1 L	m2 SIZE	m2 SP.	m2 L	m3 SIZE	m3 SP.	m3 L	m4 SIZE	m4 SP.	m4 L	m4 H	m4 V	m6 SIZE	m6 SP.	m6 L	m7 SIZE	m7 SP.	m7 L	m9 SIZE	m9 SP.	m9 L
0	6	4.5	32'-8	5	12	33'-2	4	12	6'-4	4	12	2'-1	4	6	9'-11	4'-7	5'-4	5	18	33'-2	7	18	7'-10	7	4.5	33'-2
1	6	4.5	32'-8	5	12	33'-2	4	12	6'-4	4	12	2'-1	4	6	9'-4	4'-1	5'-3	5	18	33'-2	7	18	7'-8	7	4.5	33'-2
2	4	4.5	32'-8	4	9	33'-2	4	9	7'-4	4	9	4'-3	4	6	8'-4	3'-1	5'-3	5	18	33'-2	7	18	7'-7	7	4.5	33'-2
3-6	5	4.5	32'-8	5	12	33'-2	5	12	7'-2	4	12	4'-5	4	6	8'-2	2'-11	5'-3	4	12	33'-2	6	12	7'-2	6	4.5	33'-2
7-8	6	4.5	32'-8	5	12	33'-2	5	12	7'-6	4	12	4'-9	5	6	8'-0	2'-9	5'-3	5	12	33'-2	6	12	6'-10	6	4.5	33'-2
9-10	6	4.5	32'-8	5	9	33'-2	4	9	6'-3	4	9	3'-7	5	6	7'-11	2'-7	5'-4	5	9	33'-2	5	9	6'-6	5	4.5	33'-2
11-12	7	4.5	32'-8	5	12	33'-2	5	12	8'-6	4	12	4'-5	4	6	7'-9	2'-4	5'-5	5	12	33'-2	6	12	6'-9	6	4.5	33'-2
13-15	7	4.5	32'-8	5	9	33'-2	4	9	7'-9	4	9	2'-5	4	6	7'-11	2'-4	5'-7	5	12	33'-2	6	12	6'-10	6	4.5	33'-2
16-17	7	4.5	32'-8	5	9	33'-2	4	9	8'-6	4	9	2'-1	4	6	8'-0	2'-4	5'-8	5	12	33'-2	6	12	7'-1	6	4.5	33'-2
18-19	7	4.5	32'-8	5	9	33'-2	4	9	9'-1	4	9	2'-11	6	12	8'-0	2'-3	5'-9	4	12	33'-2	7	12	7'-2	7	4.5	33'-2
20-21	7	4.5	32'-8	6	12	33'-2	5	12	9'-3	4	12	2'-3	6	12	8'-2	2'-4	5'-10	4	12	33'-2	7	12	7'-4	7	4.5	33'-2
22-23	5	4.5	32'-8	6	12	33'-2	5	12	9'-6	4	12	2'-3	6	12	8'-3	2'-4	5'-11	4	12	33'-2	7	12	7'-6	7	4.5	33'-2
24-25	7	4.5	32'-8	6	12	33'-2	5	12	9'-11	4	12	2'-3	6	12	8'-5	2'-5	6'-0	4	12	33'-2	7	12	7'-7	7	4.5	33'-2

QUANTITIES

FILL	CONCRETE (CY/FT) SLAB	FLOOR	WALLS	TOTAL	STEEL (LB/FT)
0	1.405	1.167	0.507	3.079	403.53
1	1.354	1.115	0.507	2.976	400.16
2	1.049	1.115	0.507	2.671	399.00
3-6	0.998	1.115	0.507	2.620	406.66
7-8	0.896	1.115	0.507	2.518	418.79
9-10	0.998	1.167	0.507	2.672	431.71
11-12	1.049	1.322	0.507	2.878	415.18
13-15	1.252	1.477	0.507	3.236	412.66
16-17	1.354	1.581	0.507	3.442	420.53
18-19	1.456	1.684	0.507	3.647	426.95
20-21	1.558	1.787	0.507	3.852	437.95
22-23	1.609	1.891	0.507	4.007	458.32
24-25	1.762	1.994	0.507	4.263	453.53

LATEST REVISION DATE

APPROVED BY BRIDGE ENGINEER

IOWA DOT Highway Division

STANDARD DESIGN

TRIPLE REINFORCED CONCRETE BOX CULVERTS

APRIL, 2012

CULVERT BARREL DETAILS

10 x 5 BARREL SECTIONS

TRRCB 10-5-12

ENGLISHLRFDSIGNEDTRIPLECULVERTS.DGN - TRRCB 10-5-12 - THIS SHEET ISSUED 04-12.

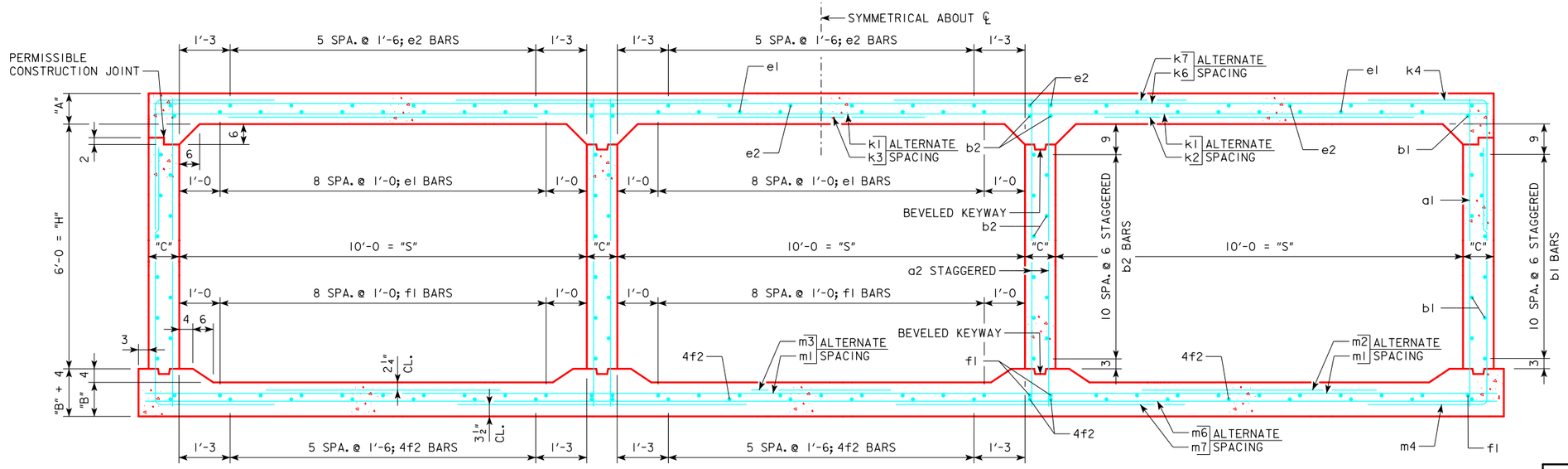

TRIPLE 10 x 6 BARREL SECTION

BENT BAR DETAIL

BARS	D
4	3
5	3 3/4
6	4 1/2

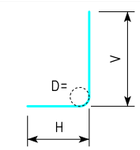

k4 & m4

NOTE:
ALL DIMENSIONS ARE OUT TO OUT.
D = PIN DIAMETER.

NOTES:

1. DIMENSIONS LISTED ON THIS SHEET TO BE USED IN CONJUNCTION WITH SHEET TRRCB G2-12.
2. DIMENSIONS "A", "B", "C", "D", "E", AND "SP." LISTED IN THE BAR LIST ARE IN INCHES.

VARIABLE DIMENSIONS AND QUANTITIES FOR TRIPLE 10 x 6 BARREL SECTIONS

DIMENSIONS														BAR LIST																																			
														a1			a2			b1			b2			e1			e2			f1			f2			k1			k2			k3			k4					k6			k7		
FILL	S	H	A	B	C	D	E	R	T	U	W	X	Z	SIZE	SP.	L	SIZE	SP.	L	SIZE	SP.	NO.	SIZE	SP.	NO.	SIZE	SP.	NO.	SIZE	SP.	NO.	SIZE	SP.	NO.	SIZE	SP.	NO.	SIZE	SP.	L	SIZE	SP.	L	SIZE	SP.	L	SIZE	SP.	L	H	V	SIZE	SP.	L	SIZE	SP.	L
0	10	6	13	10.5	9	6	9	0'-0	0'-0	6'-5	2'-7	4'-4	3'-11	4	6	7'-10	6	9	7'-10	4	6	24	4	6	26	4	12	27	4	18	24	4	12	33	4	18	24	6	18	32'-8	6	18	10'-11	6	18	10'-9	4	6	7'-2	3'-11	3'-3	5	18	32'-8	6	18	12'-10
1	10	6	12.5	10.5	9	9	9	0'-7	0'-2	6'-5	2'-10	4'-4	3'-8	4	9	7'-10	6	9	7'-10	4	6	24	4	6	26	4	12	27	4	18	24	4	12	33	4	18	24	6	18	32'-8	6	18	10'-9	5	18	9'-7	5	12	7'-1	3'-11	3'-2	5	18	32'-8	6	18	12'-10
2	10	6	9.5	10	9	6	9	0'-11	0'-8	5'-1	2'-5	3'-7	3'-6	4	6	7'-6	6	9	7'-6	4	6	24	4	6	26	4	12	27	4	18	24	4	12	33	4	18	24	6	18	32'-8	6	18	10'-3	5	18	8'-11	4	6	6'-4	3'-2	3'-2	4	9	32'-8	4	9	11'-4
3-6	10	6	9	10	9	6	9	1'-7	1'-1	4'-5	2'-1	3'-1	3'-5	4	6	7'-6	6	9	7'-6	4	6	24	4	6	26	4	12	27	4	18	24	4	12	33	4	18	24	5	12	32'-8	5	12	9'-6	4	12	7'-7	5	6	6'-0	3'-0	3'-0	5	12	32'-8	5	12	10'-4
7-8	10	6	8.5	10	9	6	9	2'-10	2'-1	3'-6	3'-1	3'-8	3'-6	4	6	7'-5	6	9	7'-5	4	6	24	4	6	26	4	12	27	4	18	24	4	12	33	4	18	24	5	12	32'-8	5	12	7'-7	4	12	5'-1	6	9	6'-2	2'-11	3'-3	5	12	32'-8	6	12	7'-2
9-10	10	6	9	11	9	6	9	2'-11	2'-0	3'-5	2'-10	3'-7	3'-4	4	6	7'-7	6	9	7'-7	4	6	24	4	6	26	4	12	27	4	18	24	4	12	33	4	18	24	5	12	32'-8	5	12	7'-10	4	12	4'-11	6	9	6'-0	2'-9	3'-3	5	12	32'-8	6	12	7'-0
11-12	10	6	10	11.5	9	9	9	3'-0	1'-9	3'-4	2'-5	3'-6	3'-2	4	12	7'-8	6	9	7'-8	4	6	24	4	6	26	4	12	27	4	18	24	4	12	33	4	18	24	5	12	32'-8	5	12	8'-6	4	12	4'-9	5	6	5'-5	2'-5	3'-0	5	12	32'-8	6	12	6'-11
13-15	10	6	11.5	14	9	9	9	3'-0	1'-9	3'-4	2'-3	4'-4	3'-5	5	12	8'-0	6	9	8'-0	4	6	24	4	6	26	4	12	27	4	18	24	4	12	33	4	18	24	5	12	32'-8	5	12	8'-8	4	12	4'-9	4	6	5'-8	2'-6	3'-2	4	12	32'-8	7	12	7'-1
16-17	10	6	12.5	14.5	9	9	9	3'-11	2'-1	3'-4	2'-1	4'-2	3'-3	5	12	8'-2	6	9	8'-2	4	6	24	4	6	26	4	12	27	4	18	24	4	12	33	4	18	24	5	9	32'-8	4	9	8'-3	4	9	2'-11	4	6	5'-7	2'-5	3'-2	4	12	32'-8	7	12	7'-1
18-19	10	6	13.5	15.5	9	9	9	3'-11	1'-7	3'-4	1'-10	4'-3	3'-4	4	9	8'-4	6	9	8'-4	4	6	24	4	6	26	4	12	27	4	18	24	4	12	33	4	18	24	5	9	32'-8	4	9	9'-2	4	9	2'-11	4	6	5'-8	2'-5	3'-3	4	12	32'-8	7	12	7'-1
20-21	10	6	14.5	16.5	9	9	9	4'-0	1'-6	3'-4	1'-8	4'-3	3'-5	4	9	8'-6	6	9	8'-6	4	6	24	4	6	26	4	12	27	4	18	24	4	12	33	4	18	24	5	9	32'-8	4	9	9'-5	4	9	2'-9	4	6	5'-10	2'-6	3'-4	4	12	32'-8	7	12	7'-2
22-23	10	6	15.5	17.5	9	9	9	3'-8	1'-3	3'-5	1'-6	4'-3	3'-6	4	9	8'-8	6	9	8'-8	4	6	24	4	6	26	4	12	27	4	18	24	4	12	33	4	18	24	7	18	32'-8	6	18	9'-8	4	18	3'-5	4	6	5'-11	2'-6	3'-5	4	12	32'-8	7	12	7'-4
24-25	10	6	16	18.5	9	9	9	4'-0	1'-4	3'-5	1'-1	4'-3	3'-6	4	9	8'-9	6	9	8'-9	4	6	24	4	6	26	4	12	27	4	18	24	4	12	33	4	18	24	6	12	32'-8	5	12	9'-7	4	12	2'-9	4	6	6'-1	2'-7	3'-6	5	9	32'-8	5	9	7'-5

BAR LIST																												QUANTITIES				
	k9			m1			m2			m3			m4					m6			m7			m9			CONCRETE (CY/FT)				STEEL
FILL	SIZE	SP.	L	SIZE	SP.	L	SIZE	SP.	L	SIZE	SP.	L	SIZE	SP.	L	H	V	SIZE	SP.	L	SIZE	SP.	L	SIZE	SP.	L	SLAB	FLOOR	WALLS	TOTAL	(LB/FT)
0	6	4.5	32'-8	5	12	33'-2	4	12	6'-9	4	12	2'-1	4	6	11'-4	5'-0	6'-4	5	18	33'-2	7	18	7'-10	7	4.5	33'-2	1.405	1.167	0.618	3.190	424.79
1	6	4.5	32'-8	5	12	33'-2	4	12	6'-5	4	12	2'-1	6	12	11'-1	4'-9	6'-4	4	9	33'-2	4	9	7'-4	4	4.5	33'-2	1.354	1.167	0.618	3.139	408.24
2	4	4.5	32'-8	5	12	33'-2	5	12	7'-2	4	12	3'-7	4	6	9'-8	3'-5	6'-3	5	12	33'-2	5	12	7'-1	5	4.5	33'-2	1.049	1.115	0.618	2.782	415.58
3-6	5	4.5	32'-8	5	12	33'-2	5	12	7'-8	4	12	4'-7	4	6	9'-3	3'-0	6'-3	4	9	33'-2	5	9	7'-0	5	4.5	33'-2	0.998	1.115	0.618	2.731	428.84
7-8	6	4.5	32'-8	5	9	33'-2	4	9	5'-9	4	9	3'-5	5	9	9'-1	2'-10	6'-3	4	12	33'-2	7	12	7'-1	7	4.5	33'-2	0.947	1.115	0.618	2.680	437.24
9-10	6	4.5	32'-8	5	9	33'-2	4	9	6'-5	4	9	3'-7	5	9	8'-11	2'-7	6'-4	5	12	33'-2	6	12	6'-10	6	4.5	33'-2	0.998	1.219	0.618	2.835	440.58
11-12	6	4.5	32'-8	5	9	33'-2	4	9	7'-2	4	9	3'-9	5	6	8'-11	2'-6	6'-5	5	9	33'-2	5	9	6'-7	5	4.5	33'-2	1.100	1.270	0.618	2.988	450.26
13-15	7	4.5	32'-8	5	9	33'-2	4	9	8'-0	4	9	2'-1	4	6	9'-1	2'-6	6'-7	5	18	33'-2	8	18	7'-3	8	4.5	33'-2	1.252	1.529	0.618	3.399	426.53
16-17	7	4.5	32'-8	5	9	33'-2	4	9	8'-3	4	9	2'-5	4	6	9'-2	2'-6	6'-8	4	12	33'-2	7	12	6'-11	7	4.5	33'-2	1.354	1.581	0.618	3.553	434.21
18-19	7	4.5	32'-8	6	12	33'-2	5	12	8'-8	4	12	2'-3	4	6	9'-3	2'-6	6'-9	4	12	33'-2	7	12	7'-2	7	4.5	33'-2	1.456	1.684	0.618	3.758	443.47
20-21	7	4.5	32'-8	6	12	33'-2	5	12	9'-3	4	12	2'-3	4	6	9'-4	2'-6	6'-10	4	12	33'-2	7	12	7'-4	7	4.5	33'-2	1.558	1.787	0.618	3.963	447.47
22-23	7	4.5	32'-8	6	12	33'-2	5	12	9'-6	4	12	2'-3	4	6	9'-6	2'-7	6'-11	4	12	33'-2	7	12	7'-6	7	4.5	33'-2	1.660	1.891	0.618	4.169	455.92
24-25	5	4.5	32'-8	6	12	33'-2	5	12	9'-11	4	12	2'-3	4	6	9'-7	2'-7	7'-0	4	12	33'-2	7	12	7'-7	7	4.5	33'-2	1.711	1.994	0.618	4.323	471.53

LATEST REVISION DATE

APPROVED BY BRIDGE ENGINEER

IOWA DOT Highway Division

STANDARD DESIGN

TRIPLE REINFORCED CONCRETE BOX CULVERTS

APRIL, 2012

CULVERT BARREL DETAILS

10 x 6 BARREL SECTIONS

TRRCB 10-6-12

ENGLISHLRFDSIGNEDTRIPLECULVERTS.DGN - TRRCB 10-6-12 - THIS SHEET ISSUED 04-12.

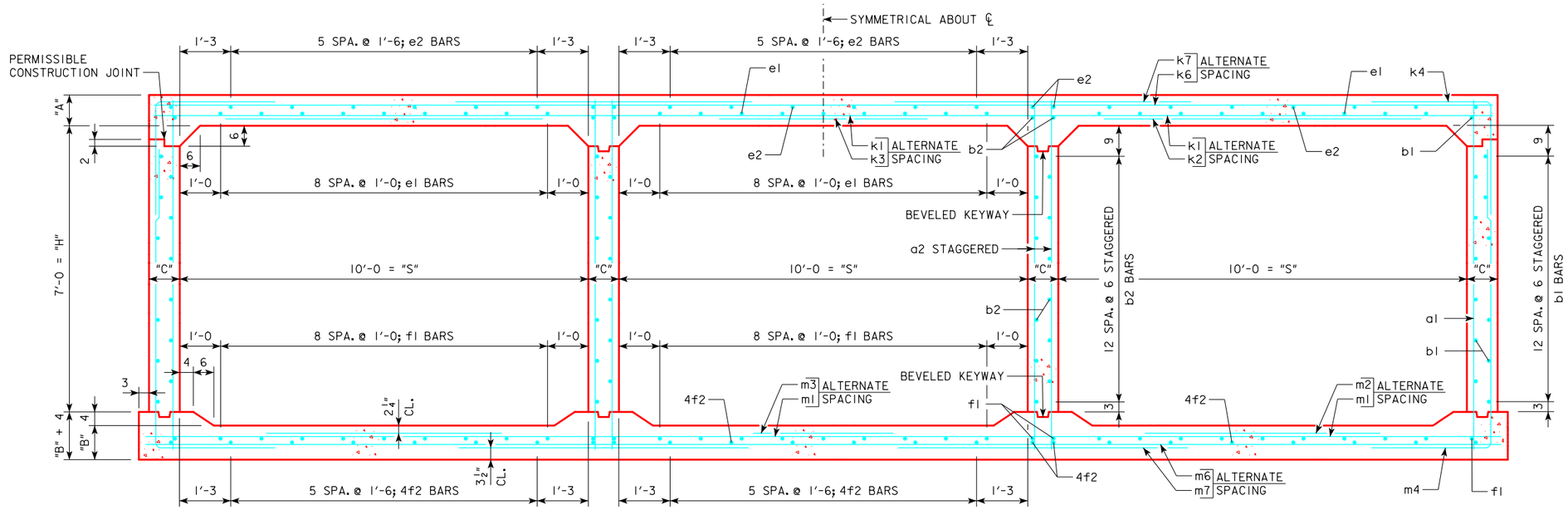

TRIPLE 10 x 7 BARREL SECTION

NOTES:

1. DIMENSIONS LISTED ON THIS SHEET TO BE USED IN CONJUNCTION WITH SHEET TRRCB G2-12.
2. DIMENSIONS "A", "B", "C", "D", "E", AND "SP." LISTED IN THE BAR LIST ARE IN INCHES.

LATEST REVISION DATE

APPROVED BY BRIDGE ENGINEER

IOWA DOT Highway Division

STANDARD DESIGN

TRIPLE REINFORCED CONCRETE BOX CULVERTS

APRIL, 2012

CULVERT BARREL DETAILS

10 x 7 BARREL SECTIONS

TRRCB 10-7-12

SHEET 1 OF 2

ENGLISHLRFDSIGNEDTRIPLECULVERTS.DGN - TRRCB 10-7s1-12 - THIS SHEET ISSUED 04-12.

VARIABLE DIMENSIONS AND QUANTITIES FOR TRIPLE 10 x 7 BARREL SECTIONS

DIMENSIONS													
FILL	S	H	A	B	C	D	E	R	T	U	W	X	Z
0	10	7	13	10.5	9	6	9	0'-0	0'-0	6'-5	2'-6	4'-4	3'-11
1	10	7	12.5	10.5	9	9	9	0'-6	0'-2	6'-5	2'-6	4'-4	3'-11
2	10	7	9.5	10	9	6	9	1'-1	0'-11	5'-4	2'-4	3'-6	3'-8
3-6	10	7	9	10	9	6	9	2'-3	2'-0	4'-7	2'-0	3'-1	3'-5
7-8	10	7	8.5	10	9	9	9	2'-10	2'-0	3'-6	3'-1	3'-8	3'-6
9-10	10	7	9	11	9	9	9	2'-10	2'-0	3'-5	2'-10	3'-7	3'-5
11-12	10	7	10	12	9	9	9	2'-11	1'-9	3'-4	2'-6	3'-9	3'-4
13-15	10	7	12	14	9	6	9	3'-0	1'-8	3'-3	2'-3	4'-4	3'-5
16-17	10	7	12.5	15	9	9	9	3'-9	2'-1	3'-4	2'-1	3'-11	3'-5
18-19	10	7	13.5	15.5	9	6	9	3'-9	1'-7	3'-4	1'-9	4'-3	3'-4
20-21	10	7	14.5	16.5	9	6	9	3'-9	1'-5	3'-4	1'-7	4'-3	3'-5
22-23	10	7	15.5	17.5	9	6	9	3'-5	1'-3	3'-5	1'-6	4'-3	3'-6
24-25	10	7	16	18.5	9	9	9	3'-10	1'-3	3'-5	1'-1	4'-3	3'-6

BAR LIST																																															
	a1			a2			b1			b2			e1			e2			f1			f2			k1			k2			k3			k4						k6			k7		
FILL	SIZE	SP.	L	SIZE	SP.	L	SIZE	SP.	NO.	SIZE	SP.	NO.	SIZE	SP.	NO.	SIZE	SP.	NO.	SIZE	SP.	NO.	SIZE	SP.	NO.	SIZE	SP.	L	SIZE	SP.	L	SIZE	SP.	L	SIZE	SP.	L	H	V	SIZE	SP.	L	SIZE	SP.	L
0	4	6	8'-10	6	9	8'-10	4	6	28	4	6	30	4	12	27	4	18	24	4	12	33	4	18	24	6	18	32'-8	6	18	10'-11	6	18	10'-9	4	6	9'-6	6'-3	3'-3	5	18	32'-8	6	18	12'-10
1	4	9	8'-10	6	9	8'-10	4	6	28	4	6	30	4	12	27	4	18	24	4	12	33	4	18	24	6	18	32'-8	6	18	10'-9	5	18	9'-9	5	12	9'-5	6'-3	3'-2	5	18	32'-8	6	18	12'-10
2	4	6	8'-6	6	9	8'-6	4	6	28	4	6	30	4	12	27	4	18	24	4	12	33	4	18	24	5	12	32'-8	5	12	10'-0	4	12	8'-7	4	6	6'-8	3'-8	3'-0	4	9	32'-8	4	9	11'-7
3-6	4	6	8'-6	6	9	8'-6	4	6	28	4	6	30	4	12	27	4	18	24	4	12	33	4	18	24	5	9	32'-8	4	9	7'-10	4	9	6'-3	5	6	6'-3	3'-4	2'-11	5	12	32'-8	5	12	10'-10
7-8	4	12	8'-5	6	9	8'-5	4	6	28	4	6	30	4	12	27	4	18	24	4	12	33	4	18	24	5	12	32'-8	5	12	7'-9	4	12	5'-1	5	6	5'-10	2'-11	2'-11	5	12	32'-8	6	12	7'-3
9-10	4	12	8'-7	6	9	8'-7	4	6	28	4	6	30	4	12	27	4	18	24	4	12	33	4	18	24	5	12	32'-8	5	12	7'-10	4	12	5'-1	6	9	6'-2	2'-11	3'-3	5	12	32'-8	6	12	7'-0
11-12	4	12	8'-9	6	9	8'-9	4	6	28	4	6	30	4	12	27	4	18	24	4	12	33	4	18	24	5	12	32'-8	5	12	8'-6	4	12	4'-11	6	9	6'-1	2'-9	3'-4	5	12	32'-8	6	12	6'-11
13-15	4	6	9'-1	6	9	9'-1	4	6	28	4	6	30	4	12	27	4	18	24	4	12	33	4	18	24	5	12	32'-8	5	12	9'-1	4	12	4'-9	4	6	5'-10	2'-8	3'-2	5	12	32'-8	6	12	6'-11
16-17	5	12	9'-2	6	9	9'-2	4	6	28	4	6	30	4	12	27	4	18	24	4	12	33	4	18	24	5	9	32'-8	4	9	8'-2	4	9	3'-3	4	6	5'-11	2'-8	3'-3	4	12	32'-8	7	12	7'-1
18-19	4	6	9'-4	6	9	9'-4	4	6	28	4	6	30	4	12	27	4	18	24	4	12	33	4	18	24	5	9	32'-8	4	9	8'-11	4	9	3'-3	4	6	5'-11	2'-8	3'-3	4	12	32'-8	7	12	7'-1
20-21	4	6	9'-6	6	9	9'-6	4	6	28	4	6	30	4	12	27	4	18	24	4	12	33	4	18	24	5	9	32'-8	4	9	9'-6	4	9	3'-3	4	6	6'-1	2'-9	3'-4	4	12	32'-8	7	12	7'-2
22-23	4	6	9'-8	6	9	9'-8	4	6	28	4	6	30	4	12	27	4	18	24	4	12	33	4	18	24	7	18	32'-8	6	18	9'-8	4	18	3'-11	4	6	6'-2	2'-9	3'-5	4	12	32'-8	7	12	7'-4
24-25	5	12	9'-9	6	9	9'-9	4	6	28	4	6	30	4	12	27	4	18	24	4	12	33	4	18	24	6	12	32'-8	5	12	9'-8	4	12	3'-1	4	6	6'-4	2'-10	3'-6	5	9	32'-8	5	9	7'-5

BAR LIST																																															
	k9			m1			m2			m3			m4					m6			m7			m9			QUANTITIES				
																											CONCRETE (CY/FT)				STEEL
FILL	SIZE	SP.	L	SIZE	SP.	L	SIZE	SP.	L	SIZE	SP.	L	SIZE	SP.	L	H	V	SIZE	SP.	L	SIZE	SP.	L	SIZE	SP.	L	SLAB	FLOOR	WALLS	TOTAL	(LB/FT)
0	6	4.5	32'-8	5	12	33'-2	4	12	7'-0	4	12	2'-1	4	6	12'-10	5'-6	7'-4	5	18	33'-2	7	18	7'-10	7	4.5	33'-2	1.405	1.167	0.729	3.301	447.50
1	6	4.5	32'-8	5	12	33'-2	4	12	6'-11	4	12	2'-1	6	12	12'-7	5'-3	7'-4	5	18	33'-2	7	18	7'-10	7	4.5	33'-2	1.354	1.167	0.729	3.250	437.05
2	4	4.5	32'-8	5	12	33'-2	5	12	7'-5	4	12	3'-9	4	6	11'-0	3'-9	7'-3	4	12	33'-2	6	12	7'-5	6	4.5	33'-2	1.049	1.115	0.729	2.893	428.92
3-6	5	4.5	32'-8	5	12	33'-2	5	12	7'-10	4	12	4'-7	4	6	10'-6	3'-3	7'-3	4	9	33'-2	5	9	7'-0	5	4.5	33'-2	0.998	1.115	0.729	2.842	452.26
7-8	6	4.5	32'-8	5	9	33'-2	4	9	5'-9	4	9	3'-5	5	6	10'-2	2'-11	7'-3	4	12	33'-2	7	12	7'-1	7	4.5	33'-2	0.947	1.115	0.729	2.791	454.26
9-10	6	4.5	32'-8	5	9	33'-2	4	9	6'-4	4	9	3'-7	6	9	10'-3	2'-11	7'-4	4	12	33'-2	7	12	7'-0	7	4.5	33'-2	0.998	1.219	0.729	2.946	456.55
11-12	6	4.5	32'-8	5	9	33'-2	4	9	7'-2	4	9	3'-3	6	9	10'-2	2'-9	7'-5	4	12	33'-2	7	12	7'-0	7	4.5	33'-2	1.100	1.322	0.729	3.151	458.89
13-15	6	4.5	32'-8	5	9	33'-2	4	9	8'-0	4	9	2'-1	4	6	10'-4	2'-9	7'-7	5	18	33'-2	8	18	7'-3	8	4.5	33'-2	1.303	1.529	0.729	3.561	450.34
16-17	7	4.5	32'-8	5	9	33'-2	4	9	8'-4	4	9	2'-11	4	6	10'-5	2'-9	7'-8	5	18	33'-2	8	18	7'-3	8	4.5	33'-2	1.354	1.632	0.729	3.715	451.76
18-19	7	4.5	32'-8	6	12	33'-2	5	12	8'-9	4	12	2'-3	4	6	10'-6	2'-9	7'-9	4	12	33'-2	7	12	7'-2	7	4.5	33'-2	1.456	1.684	0.729	3.869	466.87
20-21	7	4.5	32'-8	6	12	33'-2	5	12	9'-4	4	12	2'-3	4	6	10'-7	2'-9	7'-10	4	12	33'-2	7	12	7'-4	7	4.5	33'-2	1.558	1.787	0.729	4.074	471.76
22-23	7	4.5	32'-8	6	12	33'-2	5	12	9'-6	4	12	2'-3	4	6	10'-9	2'-10	7'-11	4	12	33'-2	7	12	7'-6	7	4.5	33'-2	1.660	1.891	0.729	4.280	479.82
24-25	5	4.5	32'-8	6	12	33'-2	5	12	9'-11	4	12	2'-3	4	6	10'-10	2'-10	8'-0	4	12	33'-2	7	12	7'-7	7	4.5	33'-2	1.711	1.994	0.729	4.434	490.47

BENT BAR DETAIL

BARS	D
4	3
5	$3\frac{3}{4}$
6	$4\frac{1}{2}$

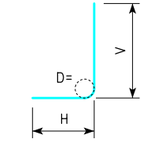

k4 & m4

NOTE:
ALL DIMENSIONS ARE OUT TO OUT.
D = PIN DIAMETER.

NOTES:

1. DIMENSIONS LISTED ON THIS SHEET TO BE USED IN CONJUNCTION WITH SHEET TRRCB G2-12.
2. DIMENSIONS "A", "B", "C", "D", "E", AND "SP." LISTED IN THE BAR LIST ARE IN INCHES.

LATEST REVISION DATE

APPROVED BY BRIDGE ENGINEER

IOWA DOT Highway Division

STANDARD DESIGN

TRIPLE REINFORCED CONCRETE BOX CULVERTS

APRIL, 2012

CULVERT BARREL DETAILS

10 x 7 BARREL SECTIONS

TRRCB 10-7-12

SHEET 2 OF 2

ENGLISHLRFDSIGNEDTRIPLECULVERTS.DGN - TRRCB 10-7s2-12 - THIS SHEET ISSUED 04-12.

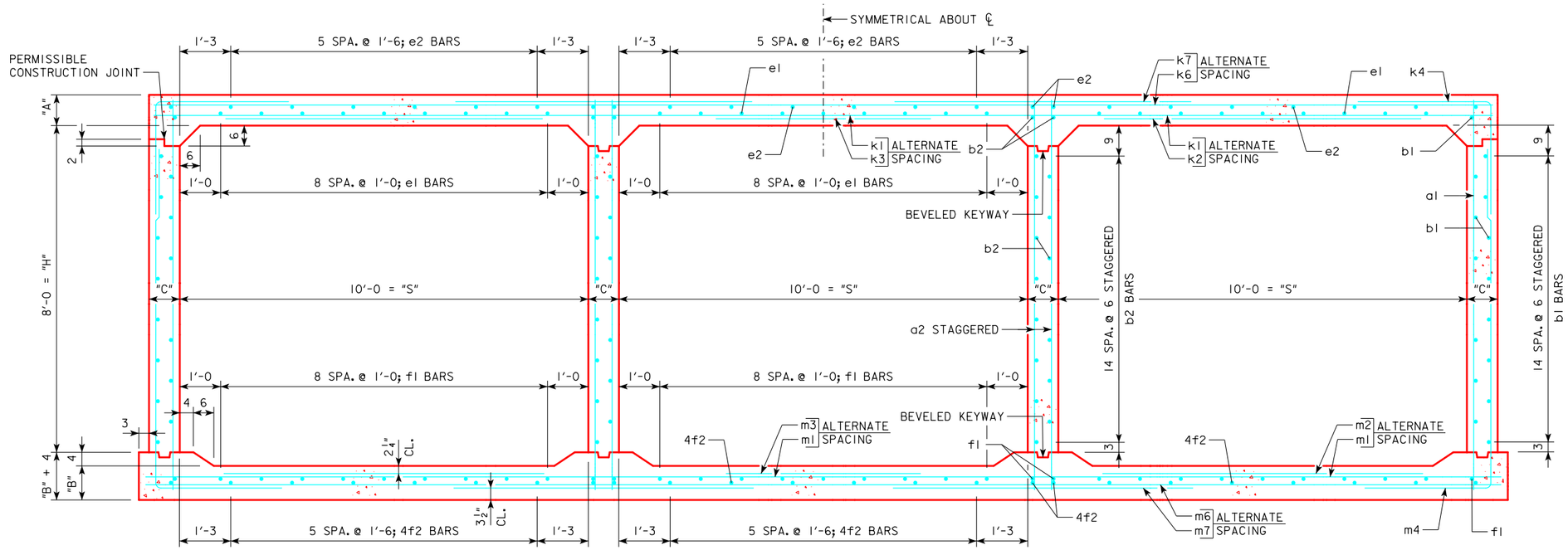

TRIPLE 10 x 8 BARREL SECTION

NOTES:

1. DIMENSIONS LISTED ON THIS SHEET TO BE USED IN CONJUNCTION WITH SHEET TRRCB G2-12.
2. DIMENSIONS "A", "B", "C", "D", "E", AND "SP." LISTED IN THE BAR LIST ARE IN INCHES.

LATEST REVISION DATE

APPROVED BY BRIDGE ENGINEER

IOWA DOT Highway Division

STANDARD DESIGN

TRIPLE REINFORCED CONCRETE BOX CULVERTS

APRIL, 2012

CULVERT BARREL DETAILS

10 x 8 BARREL SECTIONS

TRRCB 10-8-12

SHEET 1 OF 2

ENGLISHLRFDSIGNEDTRIPLECULVERTS.DGN - TRRCB 10-8s1-12 - THIS SHEET ISSUED 04-12.

VARIABLE DIMENSIONS AND QUANTITIES FOR TRIPLE 10 x 8 BARREL SECTIONS

DIMENSIONS													
FILL	S	H	A	B	C	D	E	R	T	U	W	X	Z
0	10	8	13	11	9	9	9	0'-0	0'-0	6'-5	2'-6	4'-4	3'-9
1	10	8	12.5	10.5	9	6	9	0'-7	0'-1	6'-5	2'-3	3'-7	3'-11
2	10	8	9.5	10	9	6	9	1'-1	0'-11	5'-8	2'-1	3'-5	3'-8
3-6	10	8	9	10	9	6	9	2'-3	2'-0	4'-8	2'-0	3'-0	3'-5
7-8	10	8	8.5	10.5	9	6	9	2'-9	2'-0	3'-6	2'-1	3'-0	3'-7
9-10	10	8	9	11	9	9	9	2'-10	2'-0	3'-5	2'-9	3'-6	3'-5
11-12	10	8	10	12	9	9	9	2'-11	1'-9	3'-4	2'-5	3'-7	3'-4
13-15	10	8	12	14	9	9	9	2'-11	1'-8	3'-4	2'-3	4'-2	3'-5
16-17	10	8	12.5	15	9	9	9	3'-6	2'-1	3'-4	2'-0	3'-11	3'-5
18-19	10	8	13.5	16	9	9	9	3'-6	1'-10	3'-4	1'-7	3'-11	3'-4
20-21	10	8	14.5	16.5	9.5	9	6	3'-6	1'-5	3'-5	1'-7	4'-1	3'-5
22-23	10	8	15.5	17.5	10	6	9	3'-4	1'-4	3'-5	1'-6	3'-11	3'-6
24-25	10	8	16.5	18.5	10	6	9	3'-8	1'-4	3'-6	1'-1	3'-11	3'-7

BAR LIST																																															
	a1			a2			b1			b2			e1			e2			f1			f2			k1			k2			k3			k4					k6			k7		
FILL	SIZE	SP.	L	SIZE	SP.	L	SIZE	SP.	NO.	SIZE	SP.	NO.	SIZE	SP.	NO.	SIZE	SP.	NO.	SIZE	SP.	NO.	SIZE	SP.	NO.	SIZE	SP.	L	SIZE	SP.	L	SIZE	SP.	L	SIZE	SP.	L	H	V	SIZE	SP.	L	SIZE	SP.	L
0	4	9	9'-11	6	9	9'-11	4	6	32	4	6	34	4	12	27	4	18	24	4	12	33	4	18	24	6	18	32'-8	6	18	10'-11	6	18	10'-9	5	12	9'-6	6'-3	3'-3	5	18	32'-8	6	18	12'-10
1	4	6	9'-10	6	9	9'-10	4	6	32	4	6	34	4	12	27	4	18	24	4	12	33	4	18	24	6	18	32'-8	6	18	10'-10	6	18	9'-7	4	6	9'-5	6'-3	3'-2	5	18	32'-8	6	18	12'-10
2	4	6	9'-6	6	9	9'-6	4	6	32	4	6	34	4	12	27	4	18	24	4	12	33	4	18	24	5	12	32'-8	5	12	10'-0	4	12	8'-7	5	6	7'-4	4'-4	3'-0	4	9	32'-8	4	9	11'-11
3-6	4	6	9'-6	6	9	9'-6	4	6	32	4	6	34	4	12	27	4	18	24	4	12	33	4	18	24	5	9	32'-8	4	9	7'-10	4	9	6'-3	5	6	6'-9	3'-10	2'-11	5	12	32'-8	5	12	10'-11
7-8	4	6	9'-6	6	9	9'-6	4	6	32	4	6	34	4	12	27	4	18	24	4	12	33	4	18	24	5	12	32'-8	5	12	7'-9	4	12	5'-3	6	9	6'-6	3'-3	3'-3	5	12	32'-8	6	12	7'-3
9-10	4	12	9'-7	6	9	9'-7	4	6	32	4	6	34	4	12	27	4	18	24	4	12	33	4	18	24	5	12	32'-8	5	12	7'-11	4	12	5'-1	5	6	6'-0	3'-0	3'-0	5	12	32'-8	6	12	7'-1
11-12	4	12	9'-9	6	9	9'-9	4	6	32	4	6	34	4	12	27	4	18	24	4	12	33	4	18	24	5	12	32'-8	5	12	8'-7	4	12	4'-11	5	6	6'-0	3'-0	3'-0	5	12	32'-8	6	12	6'-11
13-15	4	12	10'-1	6	9	10'-1	4	6	32	4	6	34	4	12	27	4	18	24	4	12	33	4	18	24	5	12	32'-8	5	12	8'-10	4	12	4'-11	5	6	6'-4	3'-2	3'-2	5	12	32'-8	6	12	7'-0
16-17	4	12	10'-2	6	9	10'-2	4	6	32	4	6	34	4	12	27	4	18	24	4	12	33	4	18	24	5	9	32'-8	4	9	8'-3	4	9	3'-9	5	6	6'-2	2'-11	3'-3	4	12	32'-8	7	12	7'-1
18-19	4	12	10'-4	6	9	10'-4	4	6	32	4	6	34	4	12	27	4	18	24	4	12	33	4	18	24	5	9	32'-8	4	9	8'-8	4	9	3'-9	5	6	6'-4	3'-0	3'-4	4	12	32'-8	7	12	7'-1
20-21	4	12	10'-6	5	6	10'-6	4	6	32	4	6	34	4	12	27	4	18	24	4	12	33	4	18	24	5	9	32'-10	4	9	9'-6	4	9	3'-10	6	9	6'-8	3'-0	3'-8	4	12	32'-10	7	12	7'-3
22-23	4	6	10'-8	7	9	10'-8	4	6	32	4	6	34	4	12	27	4	18	24	4	12	33	4	18	24	5	9	33'-0	4	9	9'-9	4	9	4'-2	6	12	6'-10	3'-1	3'-9	4	12	33'-0	7	12	7'-4
24-25	4	6	10'-10	7	9	10'-10	4	6	32	4	6	34	4	12	27	4	18	24	4	12	33	4	18	24	6	12	33'-0	5	12	9'-9	4	12	3'-6	6	12	7'-0	3'-2	3'-10	4	12	33'-0	7	12	7'-6

BAR LIST																																				QUANTITIES				
	k9			m1			m2			m3			m4					m6			m7			m9			CONCRETE (CY/FT)				STEEL
FILL	SIZE	SP.	L	SIZE	SP.	L	SIZE	SP.	L	SIZE	SP.	L	SIZE	SP.	L	H	V	SIZE	SP.	L	SIZE	SP.	L	SIZE	SP.	L	SLAB	FLOOR	WALLS	TOTAL	(LB/FT)
0	6	4.5	32'-8	5	12	33'-2	4	12	7'-1	4	12	2'-1	6	12	14'-8	6'-4	8'-4	4	9	33'-2	4	9	7'-6	4	4.5	33'-2	1.405	1.219	0.840	3.464	453.32
1	6	4.5	32'-8	4	9	33'-2	4	9	7'-6	4	9	3'-7	4	6	14'-1	5'-9	8'-4	5	18	33'-2	7	18	7'-10	7	4.5	33'-2	1.354	1.167	0.840	3.361	460.45
2	4	4.5	32'-8	5	12	33'-2	5	12	7'-9	4	12	3'-11	4	6	12'-5	4'-2	8'-3	4	12	33'-2	6	12	7'-5	6	4.5	33'-2	1.049	1.115	0.840	3.004	458.97
3-6	5	4.5	32'-8	5	12	33'-2	5	12	7'-10	4	12	4'-9	4	6	11'-10	3'-7	8'-3	4	9	33'-2	5	9	7'-0	5	4.5	33'-2	0.998	1.115	0.840	2.953	470.21
7-8	6	4.5	32'-8	5	12	33'-2	5	12	7'-10	4	12	4'-9	5	9	11'-5	3'-1	8'-4	5	18	33'-2	8	18	7'-4	8	4.5	33'-2	0.947	1.167	0.840	2.954	466.29
9-10	6	4.5	32'-8	5	9	33'-2	4	9	6'-7	4	9	3'-9	5	6	11'-4	3'-0	8'-4	4	12	33'-2	7	12	7'-0	7	4.5	33'-2	0.998	1.219	0.840	3.057	472.66
11-12	6	4.5	32'-8	5	9	33'-2	4	9	7'-3	4	9	3'-7	5	6	11'-4	2'-11	8'-5	4	12	33'-2	7	12	7'-0	7	4.5	33'-2	1.100	1.322	0.840	3.262	475.32
13-15	6	4.5	32'-8	5	9	33'-2	4	9	8'-0	4	9	2'-5	5	6	11'-7	3'-0	8'-7	5	18	33'-2	8	18	7'-3	8	4.5	33'-2	1.303	1.529	0.840	3.672	481.26
16-17	7	4.5	32'-8	5	9	33'-2	4	9	8'-5	4	9	2'-11	5	6	11'-8	3'-0	8'-8	5	18	33'-2	8	18	7'-3	8	4.5	33'-2	1.354	1.632	0.840	3.826	487.26
18-19	7	4.5	32'-8	5	9	33'-2	4	9	9'-4	4	9	2'-11	5	6	11'-10	3'-1	8'-9	5	18	33'-2	8	18	7'-2	8	4.5	33'-2	1.456	1.736	0.840	4.032	491.50
20-21	7	4.5	32'-10	6	12	33'-4	5	12	9'-4	4	12	2'-8	6	9	11'-11	3'-1	8'-10	4	12	33'-4	7	12	7'-4	7	4.5	33'-4	1.568	1.798	0.887	4.253	506.18
22-23	7	4.5	33'-0	6	12	33'-6	5	12	9'-7	4	12	3'-0	6	12	12'-1	3'-2	8'-11	4	12	33'-6	7	12	7'-6	7	4.5	33'-6	1.682	1.913	0.934	4.529	521.66
24-25	7	4.5	33'-0	6	12	33'-6	5	12	10'-0	4	12	3'-0	6	12	12'-3	3'-3	9'-0	4	12	33'-6	7	12	7'-8	7	4.5	33'-6	1.784	2.017	0.934	4.735	533.18

BENT BAR DETAIL

BARS	D
4	3
5	$3\frac{3}{4}$
6	$4\frac{1}{2}$

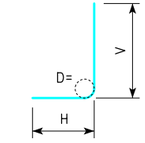

k4 & m4

NOTE:
ALL DIMENSIONS ARE OUT TO OUT.
D = PIN DIAMETER.

NOTES:

1. DIMENSIONS LISTED ON THIS SHEET TO BE USED IN CONJUNCTION WITH SHEET TRRCB G2-12.
2. DIMENSIONS "A", "B", "C", "D", "E", AND "SP." LISTED IN THE BAR LIST ARE IN INCHES.

LATEST REVISION DATE

APPROVED BY BRIDGE ENGINEER

IOWA DOT Highway Division

STANDARD DESIGN

TRIPLE REINFORCED CONCRETE BOX CULVERTS

APRIL, 2012

CULVERT BARREL DETAILS

10 x 8 BARREL SECTIONS

TRRCB 10-8-12

SHEET 2 OF 2

ENGLISHLRFDSIGNEDTRIPLECULVERTS.DGN - TRRCB 10-8s2-12 - THIS SHEET ISSUED 04-12.

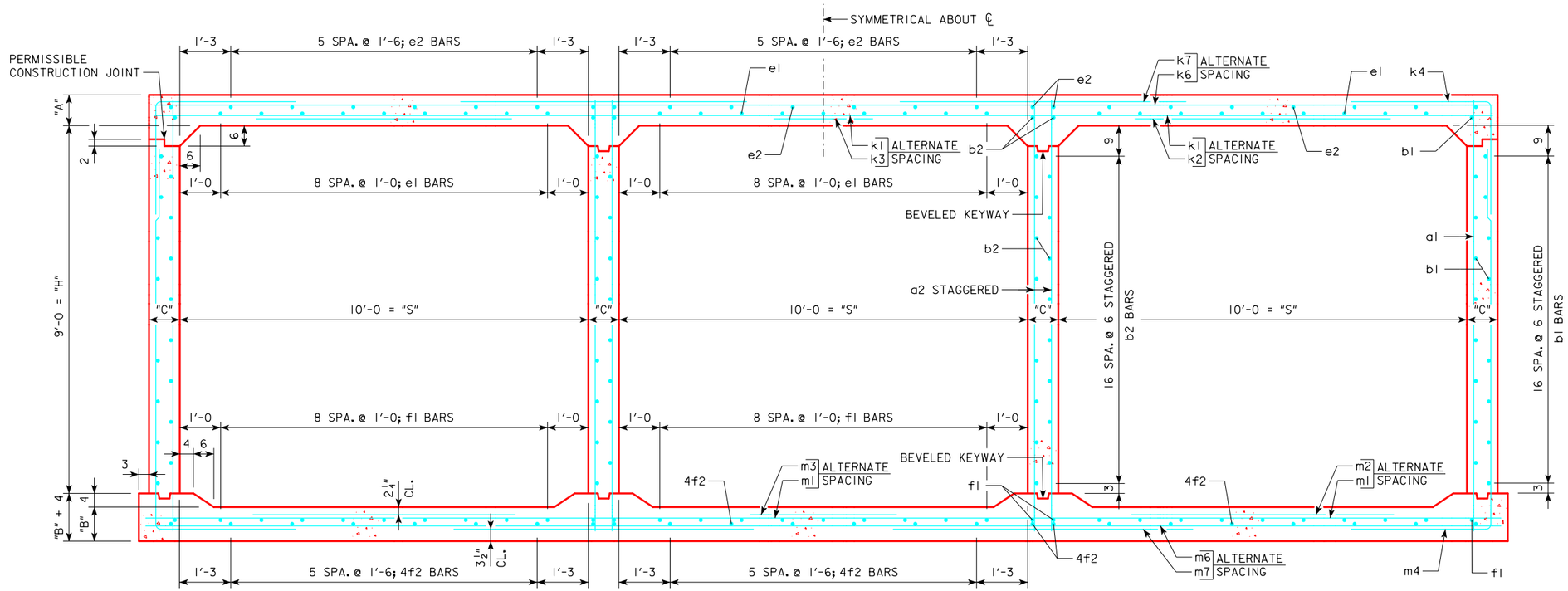

TRIPLE 10 x 9 BARREL SECTION

NOTES:

1. DIMENSIONS LISTED ON THIS SHEET TO BE USED IN CONJUNCTION WITH SHEET TRRCB G2-12.
2. DIMENSIONS "A", "B", "C", "D", "E", AND "SP." LISTED IN THE BAR LIST ARE IN INCHES.

LATEST REVISION DATE

APPROVED BY BRIDGE ENGINEER

IOWA DOT Highway Division

STANDARD DESIGN

TRIPLE REINFORCED CONCRETE BOX CULVERTS

APRIL, 2012

CULVERT BARREL DETAILS

10 x 9 BARREL SECTIONS

TRRCB 10-9-12

SHEET 1 OF 2

VARIABLE DIMENSIONS AND QUANTITIES FOR TRIPLE 10 x 9 BARREL SECTIONS

DIMENSIONS													
FILL	S	H	A	B	C	D	E	R	T	U	W	X	Z
0	10	9	13	11	9	6	9	0'-0	0'-0	6'-5	2'-6	4'-4	4'-1
1	10	9	12.5	11	9	6	9	0'-6	0'-1	6'-5	2'-6	4'-4	3'-9
2	10	9	9	10	9	6	9	2'-0	1'-5	6'-0	2'-0	3'-4	3'-8
3-6	10	9	9	10	9	9	9	2'-3	1'-9	4'-11	2'-10	3'-8	3'-5
7-8	10	9	8	10.5	9	9	9	4'-2	2'-8	3'-5	2'-10	3'-7	3'-7
9-10	10	9	9	11	9	9	9	3'-7	2'-6	3'-3	2'-8	3'-6	3'-5
11-12	10	9	9.5	12	9	9	9	3'-6	2'-4	3'-3	2'-5	3'-7	3'-4
13-15	10	9	12	14	9	9	9	2'-10	1'-8	3'-5	2'-2	3'-11	3'-5
16-17	10	9	12.5	15	9.5	9	6	3'-4	2'-1	3'-4	2'-1	3'-10	3'-5
18-19	10	9	13.5	15.5	10	9	9	3'-4	1'-11	3'-4	1'-9	3'-9	3'-5
20-21	10	9	14.5	16.5	10.5	9	9	3'-3	1'-6	3'-5	1'-8	3'-7	3'-6
22-23	10	9	15.5	17.5	11	9	9	3'-2	1'-4	3'-6	1'-6	3'-6	3'-7
24-25	10	9	16.5	18.5	11.5	9	9	3'-0	1'-2	3'-7	1'-5	3'-4	3'-8

BAR LIST																																														
	a1			a2			b1			b2			e1			e2			f1			f2			k1			k2			k3			k4						k6			k7		
FILL	SIZE	SP.	L	SIZE	SP.	L	SIZE	SP.	NO.	SIZE	SP.	NO.	SIZE	SP.	NO.	SIZE	SP.	NO.	SIZE	SP.	NO.	SIZE	SP.	NO.	SIZE	SP.	L	SIZE	SP.	L	SIZE	SP.	L	SIZE	SP.	L	H	V	SIZE	SP.	L	SIZE	SP.	L
0	4	6	10'-11	6	9	10'-11	4	6	36	4	6	38	4	12	27	4	18	24	4	12	33	4	18	24	6	18	32'-8	6	18	10'-11	6	18	10'-9	5	9	9'-6	6'-3	3'-3	5	18	32'-8	6	18	12'-10
1	4	6	10'-10	6	9	10'-10	4	6	36	4	6	38	4	12	27	4	18	24	4	12	33	4	18	24	6	18	32'-8	6	18	10'-10	6	18	9'-9	5	9	9'-6	6'-3	3'-3	5	18	32'-8	6	18	12'-10
2	4	6	10'-6	6	9	10'-6	4	6	36	4	6	38	5	12	27	4	18	24	4	12	33	4	18	24	5	9	32'-8	4	9	8'-8	4	9	6'-9	6	9	8'-5	5'-2	3'-3	5	12	32'-8	5	12	12'-3
3-6	4	12	10'-6	6	9	10'-6	4	6	36	4	6	38	4	12	27	4	18	24	4	12	33	4	18	24	5	9	32'-8	4	9	8'-1	4	9	6'-3	5	6	7'-4	4'-5	2'-11	5	12	32'-8	5	12	11'-2
7-8	4	12	10'-5	6	9	10'-5	4	6	36	4	6	38	4	12	27	4	18	24	4	12	33	4	18	24	5	9	32'-8	4	9	6'-3	4	9	2'-5	5	6	6'-3	3'-5	2'-10	5	9	32'-8	5	9	7'-0
9-10	4	12	10'-7	6	9	10'-7	4	6	36	4	6	38	4	12	27	4	18	24	4	12	33	4	18	24	5	9	32'-8	4	9	6'-10	4	9	3'-7	5	6	6'-2	3'-3	2'-11	5	9	32'-8	5	9	6'-9
11-12	4	12	10'-8	6	9	10'-8	4	6	36	4	6	38	4	12	27	4	18	24	4	12	33	4	18	24	5	9	32'-8	4	9	7'-3	4	9	3'-9	5	6	6'-4	3'-2	3'-2	5	9	32'-8	5	9	6'-9
13-15	4	12	11'-1	6	9	11'-1	4	6	36	4	6	38	4	12	27	4	18	24	4	12	33	4	18	24	5	12	32'-8	5	12	8'-10	4	12	5'-1	6	9	7'-0	3'-6	3'-6	4	12	32'-8	7	12	7'-2
16-17	4	9	11'-2	5	6	11'-2	4	6	36	4	6	38	4	12	27	4	18	24	4	12	33	4	18	24	5	9	32'-10	4	9	8'-2	4	9	4'-2	6	9	6'-10	3'-3	3'-7	4	12	32'-10	7	12	7'-1
18-19	4	9	11'-4	7	9	11'-4	4	6	36	4	6	38	4	12	27	4	18	24	4	12	33	4	18	24	5	9	33'-0	4	9	8'-6	4	9	4'-2	6	9	7'-2	3'-7	3'-7	5	12	33'-0	6	12	7'-1
20-21	4	12	11'-6	7	9	11'-6	4	6	36	4	6	38	4	12	27	4	18	24	4	12	33	4	18	24	5	9	33'-2	4	9	9'-5	4	9	4'-4	5	6	6'-10	3'-5	3'-5	5	12	33'-2	6	12	7'-3
22-23	4	9	11'-8	7	9	11'-8	4	6	36	4	6	38	4	12	27	4	18	24	4	12	33	4	18	24	5	9	33'-4	4	9	9'-8	4	9	4'-7	6	9	7'-2	3'-5	3'-9	5	12	33'-4	6	12	7'-5
24-25	4	12	11'-10	7	9	11'-10	4	6	36	4	6	38	4	12	27	4	18	24	4	12	33	4	18	24	7	18	33'-6	6	18	10'-1	4	18	5'-0	5	6	7'-2	3'-7	3'-7	5	12	33'-6	6	12	7'-7

BAR LIST																																				QUANTITIES				
	k9			m1			m2			m3			m4					m6			m7			m9			CONCRETE (CY/FT)				STEEL
FILL	SIZE	SP.	L	SIZE	SP.	L	SIZE	SP.	L	SIZE	SP.	L	SIZE	SP.	L	H	V	SIZE	SP.	L	SIZE	SP.	L	SIZE	SP.	L	SLAB	FLOOR	WALLS	TOTAL	(LB/FT)
0	6	4.5	32'-8	5	12	33'-2	4	12	7'-2	4	12	2'-1	5	9	17'-11	8'-7	9'-4	5	18	33'-2	7	18	8'-1	7	4.5	33'-2	1.405	1.219	0.952	3.576	492.18
1	6	4.5	32'-8	5	12	33'-2	4	12	7'-2	4	12	2'-1	5	9	18'-3	8'-11	9'-4	4	9	33'-2	4	9	7'-6	4	4.5	33'-2	1.354	1.219	0.952	3.525	484.32
2	5	4.5	32'-8	5	12	33'-2	5	12	7'-11	4	12	4'-1	5	9	14'-0	4'-9	9'-3	4	12	33'-2	6	12	7'-6	6	4.5	33'-2	0.998	1.115	0.952	3.065	509.47
3-6	5	4.5	32'-8	5	9	33'-2	4	9	6'-4	4	9	3'-5	5	6	13'-2	3'-11	9'-3	4	9	33'-2	5	9	7'-0	5	4.5	33'-2	0.998	1.115	0.952	3.065	501.63
7-8	5	4.5	32'-8	5	9	33'-2	4	9	6'-5	4	9	3'-7	5	6	12'-9	3'-5	9'-4	5	18	33'-2	8	18	7'-4	8	4.5	33'-2	0.896	1.167	0.952	3.015	502.05
9-10	5	4.5	32'-8	5	9	33'-2	4	9	6'-11	4	9	3'-9	5	6	12'-7	3'-3	9'-4	4	12	33'-2	7	12	7'-0	7	4.5	33'-2	0.998	1.219	0.952	3.169	503.18
11-12	5	4.5	32'-8	5	9	33'-2	4	9	7'-3	4	9	3'-7	5	6	12'-8	3'-3	9'-5	4	12	33'-2	7	12	7'-0	7	4.5	33'-2	1.049	1.322	0.952	3.323	505.97
13-15	7	4.5	32'-8	5	9	33'-2	4	9	8'-1	4	9	2'-11	6	9	12'-11	3'-4	9'-7	5	18	33'-2	8	18	7'-3	8	4.5	33'-2	1.303	1.529	0.952	3.784	498.11
16-17	7	4.5	32'-10	5	9	33'-4	4	9	8'-4	4	9	3'-2	6	9	13'-0	3'-4	9'-8	5	18	33'-4	8	18	7'-3	8	4.5	33'-4	1.364	1.642	1.004	4.010	513.05
18-19	6	4.5	33'-0	6	12	33'-6	5	12	8'-9	4	12	3'-4	6	9	13'-1	3'-4	9'-9	4	12	33'-6	7	12	7'-2	7	4.5	33'-6	1.476	1.704	1.057	4.237	543.05
20-21	6	4.5	33'-2	6	12	33'-8	5	12	9'-3	4	12	3'-8	5	6	13'-3	3'-5	9'-10	4	12	33'-8	7	12	7'-5	7	4.5	33'-8	1.589	1.816	1.113	4.518	544.61
22-23	6	4.5	33'-4	6	12	33'-10	5	12	9'-7	4	12	3'-11	6	9	13'-5	3'-6	9'-11	4	12	33'-10	7	12	7'-7	7	4.5	33'-10	1.703	1.932	1.166	4.801	555.47
24-25	6	4.5	33'-6	6	12	34'-0	5	12	9'-11	4	12	4'-4	5	6	13'-7	3'-7	10'-0	4	12	34'-0	7	12	7'-9	7	4.5	34'-0	1.818	2.049	1.218	5.085	560.66

BENT BAR DETAIL

BARS	D
5	$3\frac{3}{4}$
6	$4\frac{1}{2}$

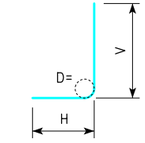

k4 & m4

NOTE:
ALL DIMENSIONS ARE OUT TO OUT.
D = PIN DIAMETER.

NOTES:

1. DIMENSIONS LISTED ON THIS SHEET TO BE USED IN CONJUNCTION WITH SHEET TRRCB G2-12.
2. DIMENSIONS "A", "B", "C", "D", "E", AND "SP." LISTED IN THE BAR LIST ARE IN INCHES.

LATEST REVISION DATE

APPROVED BY BRIDGE ENGINEER

IOWA DOT Highway Division

STANDARD DESIGN

TRIPLE REINFORCED CONCRETE BOX CULVERTS

APRIL, 2012

CULVERT BARREL DETAILS

10 x 9 BARREL SECTIONS

TRRCB 10-9-12

SHEET 2 OF 2

ENGLISHLRFDSIGNEDTRIPLECULVERTS.DGN - TRRCB 10-9s2-12 - THIS SHEET ISSUED 04-12.

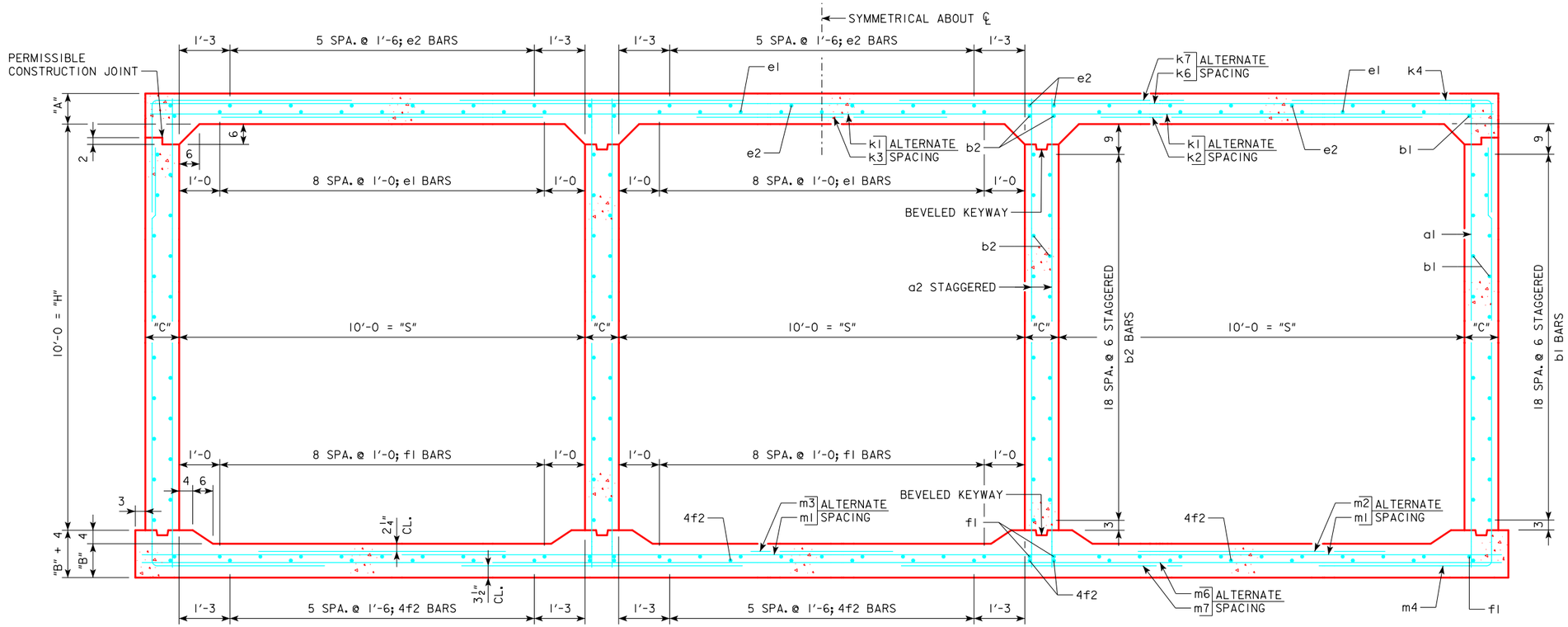

TRIPLE 10 x 10 BARREL SECTION

NOTES:

1. DIMENSIONS LISTED ON THIS SHEET TO BE USED IN CONJUNCTION WITH SHEET TRRCB G2-12.
2. DIMENSIONS "A", "B", "C", "D", "E", AND "SP." LISTED IN THE BAR LIST ARE IN INCHES.

LATEST REVISION DATE

APPROVED BY BRIDGE ENGINEER

IOWA DOT Highway Division

STANDARD DESIGN

TRIPLE REINFORCED CONCRETE BOX CULVERTS

APRIL, 2012

CULVERT BARREL DETAILS

10 x 10 BARREL SECTIONS

TRRCB 10-10-12

SHEET 1 OF 2

VARIABLE DIMENSIONS AND QUANTITIES FOR TRIPLE 10 x 10 BARREL SECTIONS

DIMENSIONS													
FILL	S	H	A	B	C	D	E	R	T	U	W	X	Z
0	10	10	13	11	10	6	9	0'-0	0'-0	6'-6	2'-6	4'-5	4'-0
1	10	10	12.5	11	10	6	9	0'-7	0'-1	6'-6	2'-6	4'-5	3'-9
2	10	10	9	10	10	9	9	2'-0	1'-9	6'-4	2'-1	3'-3	3'-7
3-6	10	10	9	10	10	9	9	2'-4	2'-0	4'-11	2'-10	3'-8	3'-5
7-8	10	10	8	10.5	10	9	9	4'-0	2'-9	3'-5	2'-11	3'-7	3'-5
9-10	10	10	9	11	10	9	9	3'-8	2'-7	3'-4	2'-9	3'-6	3'-6
11-12	10	10	9.5	12	10	9	9	3'-6	2'-5	3'-3	2'-5	3'-5	3'-5
13-15	10	10	11.5	14	10	9	9	3'-4	2'-4	3'-4	2'-3	3'-6	3'-6
16-17	10	10	12.5	15	10.5	9	9	3'-3	2'-1	3'-4	2'-1	3'-5	3'-6
18-19	10	10	13.5	15.5	11	6	9	3'-2	1'-11	3'-5	1'-10	3'-4	3'-5
20-21	10	10	14	16.5	11.5	6	9	3'-1	1'-10	3'-5	1'-8	3'-3	3'-6
22-23	10	10	15	17.5	12	6	9	3'-0	1'-5	3'-6	1'-6	3'-2	3'-7
24-25	10	10	16.5	18.5	12.5	9	9	2'-11	1'-3	3'-7	1'-5	3'-1	3'-8

BAR LIST	a1			a2			b1			b2			e1			e2			f1			f2			k1			k2			k3			k4						k6			k7		
FILL	SIZE	SP.	L	SIZE	SP.	L	SIZE	SP.	NO.	SIZE	SP.	NO.	SIZE	SP.	NO.	SIZE	SP.	NO.	SIZE	SP.	NO.	SIZE	SP.	NO.	SIZE	SP.	L	SIZE	SP.	L	SIZE	SP.	L	SIZE	SP.	L	H	V	SIZE	SP.	L	SIZE	SP.	L
0	4	6	11'-11	7	9	11'-11	4	6	40	4	6	42	4	12	27	4	18	24	4	12	33	4	18	24	6	18	33'-0	6	18	11'-1	6	18	10'-10	6	12	10'-3	6'-8	3'-7	5	18	33'-0	6	18	13'-0
1	4	6	11'-10	7	9	11'-10	4	6	40	4	6	42	4	12	27	4	18	24	4	12	33	4	18	24	6	18	33'-0	6	18	11'-0	6	18	9'-8	6	12	10'-3	6'-8	3'-7	5	18	33'-0	6	18	13'-0
2	4	12	11'-6	7	9	11'-6	4	6	40	4	6	42	5	12	27	4	18	24	4	12	33	4	18	24	5	9	33'-0	4	9	8'-5	4	9	6'-10	5	6	9'-5	6'-6	2'-11	5	12	33'-0	5	12	12'-8
3-6	4	12	11'-6	7	9	11'-6	4	6	40	4	6	42	4	12	27	4	18	24	4	12	33	4	18	24	5	9	33'-0	4	9	7'-11	4	9	6'-2	5	6	7'-10	4'-11	2'-11	5	12	33'-0	5	12	11'-3
7-8	4	12	11'-5	7	9	11'-5	4	6	40	4	6	42	4	12	27	4	18	24	4	12	33	4	18	24	5	9	33'-0	4	9	6'-0	4	9	2'-10	5	6	6'-7	3'-9	2'-10	5	9	33'-0	5	9	7'-0
9-10	4	12	11'-7	7	9	11'-7	4	6	40	4	6	42	4	12	27	4	18	24	4	12	33	4	18	24	5	9	33'-0	4	9	6'-8	4	9	3'-6	5	6	6'-7	3'-8	2'-11	5	9	33'-0	5	9	6'-10
11-12	4	12	11'-8	7	9	11'-8	4	6	40	4	6	42	4	12	27	4	18	24	4	12	33	4	18	24	5	9	33'-0	4	9	6'-11	4	9	3'-10	5	6	6'-7	3'-7	3'-0	5	9	33'-0	5	9	6'-8
13-15	4	9	12'-0	7	9	12'-0	4	6	40	4	6	42	4	12	27	4	18	24	4	12	33	4	18	24	5	9	33'-0	4	9	7'-6	4	9	4'-2	5	6	6'-10	3'-8	3'-2	5	9	33'-0	5	9	6'-11
16-17	4	9	12'-2	7	9	12'-2	4	6	40	4	6	42	4	12	27	4	18	24	4	12	33	4	18	24	5	9	33'-2	4	9	8'-2	4	9	4'-4	5	6	6'-11	3'-8	3'-3	4	12	33'-2	7	12	7'-0
18-19	4	6	12'-4	7	9	12'-4	4	6	40	4	6	42	4	12	27	4	18	24	4	12	33	4	18	24	5	9	33'-4	4	9	8'-6	4	9	4'-7	6	9	7'-4	3'-8	3'-8	5	12	33'-4	6	12	7'-2
20-21	4	6	12'-5	7	9	12'-5	4	6	40	4	6	42	4	12	27	4	18	24	4	12	33	4	18	24	5	9	33'-6	4	9	8'-9	4	9	4'-10	6	9	7'-6	3'-9	3'-9	4	12	33'-6	7	12	7'-2
22-23	4	6	12'-7	7	9	12'-7	4	6	40	4	6	42	4	12	27	4	18	24	4	12	33	4	18	24	5	9	33'-8	4	9	9'-7	4	9	5'-0	5	6	7'-2	3'-9	3'-5	4	12	33'-8	7	12	7'-4
24-25	6	12	12'-10	7	9	12'-10	4	6	40	4	6	42	4	12	27	4	18	24	4	12	33	4	18	24	5	9	33'-10	4	9	10'-1	4	9	5'-2	6	9	7'-10	3'-11	3'-11	5	12	33'-10	6	12	7'-7

BAR LIST	k9			m1			m2			m3			m4					m6			m7			m9			QUANTITIES CONCRETE (CY/FT)				STEEL
FILL	SIZE	SP.	L	SIZE	SP.	L	SIZE	SP.	L	SIZE	SP.	L	SIZE	SP.	L	H	V	SIZE	SP.	L	SIZE	SP.	L	SIZE	SP.	L	SLAB	FLOOR	WALLS	TOTAL	(LB/FT)
0	6	4.5	33'-0	5	12	33'-6	4	12	7'-2	4	12	2'-0	6	12	19'-6	9'-2	10'-4	5	18	33'-6	7	18	8'-0	7	4.5	33'-6	1.424	1.234	1.180	3.838	539.97
1	6	4.5	33'-0	5	12	33'-6	4	12	7'-2	4	12	2'-0	6	12	19'-5	9'-1	10'-4	4	9	33'-6	4	9	7'-6	4	4.5	33'-6	1.373	1.234	1.180	3.787	530.76
2	5	4.5	33'-0	5	12	33'-6	5	12	7'-10	4	12	4'-4	5	6	15'-2	4'-11	10'-3	4	9	33'-6	5	9	7'-3	5	4.5	33'-6	1.013	1.130	1.180	3.323	556.37
3-6	5	4.5	33'-0	5	9	33'-6	4	9	6'-1	4	9	3'-6	5	6	14'-6	4'-3	10'-3	4	9	33'-6	5	9	7'-0	5	4.5	33'-6	1.013	1.130	1.180	3.323	537.97
7-8	5	4.5	33'-0	5	9	33'-6	4	9	6'-4	4	9	3'-8	5	6	14'-1	3'-9	10'-4	5	12	33'-6	6	12	6'-11	6	4.5	33'-6	0.910	1.182	1.180	3.272	539.95
9-10	5	4.5	33'-0	5	9	33'-6	4	9	6'-9	4	9	3'-10	5	6	13'-11	3'-7	10'-4	4	12	33'-6	7	12	7'-1	7	4.5	33'-6	1.013	1.234	1.180	3.427	539.89
11-12	5	4.5	33'-0	5	9	33'-6	4	9	7'-4	4	9	4'-0	5	6	14'-1	3'-8	10'-5	4	12	33'-6	7	12	7'-0	7	4.5	33'-6	1.064	1.339	1.180	3.583	542.24
13-15	5	4.5	33'-0	5	9	33'-6	4	9	8'-0	4	9	3'-10	5	6	14'-4	3'-9	10'-7	5	18	33'-6	8	18	7'-4	8	4.5	33'-6	1.270	1.547	1.180	3.997	555.71
16-17	7	4.5	33'-2	5	9	33'-8	4	9	8'-4	4	9	4'-0	5	6	14'-5	3'-9	10'-8	5	18	33'-8	8	18	7'-4	8	4.5	33'-8	1.382	1.659	1.242	4.283	549.76
18-19	6	4.5	33'-4	6	12	33'-10	5	12	8'-8	4	12	4'-3	6	9	14'-6	3'-9	10'-9	4	12	33'-10	7	12	7'-2	7	4.5	33'-10	1.495	1.721	1.301	4.517	575.82
20-21	7	4.5	33'-6	6	12	34'-0	5	12	9'-3	4	12	4'-6	6	9	14'-8	3'-10	10'-10	5	12	34'-0	6	12	7'-5	6	4.5	34'-0	1.557	1.837	1.360	4.754	581.55
22-23	7	4.5	33'-8	6	12	34'-2	5	12	9'-7	4	12	4'-8	5	6	14'-9	3'-10	10'-11	4	12	34'-2	7	12	7'-7	7	4.5	34'-2	1.672	1.954	1.419	5.045	584.16
24-25	6	4.5	33'-10	6	12	34'-4	5	12	10'-0	4	12	4'-10	6	9	14'-11	3'-11	11'-0	4	12	34'-4	7	12	7'-9	7	4.5	34'-4	1.841	2.072	1.478	5.391	601.21

BENT BAR DETAIL

BARS	D
5	$3\frac{3}{4}$
6	$4\frac{1}{2}$

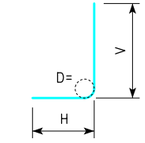

k4 & m4

NOTE:
ALL DIMENSIONS ARE OUT TO OUT.
D = PIN DIAMETER.

NOTES:

1. DIMENSIONS LISTED ON THIS SHEET TO BE USED IN CONJUNCTION WITH SHEET TRRCB G2-12.
2. DIMENSIONS "A", "B", "C", "D", "E", AND "SP." LISTED IN THE BAR LIST ARE IN INCHES.

LATEST REVISION DATE

APPROVED BY BRIDGE ENGINEER

IOWA DOT Highway Division

STANDARD DESIGN

TRIPLE REINFORCED CONCRETE BOX CULVERTS

APRIL, 2012

CULVERT BARREL DETAILS

10 x 10 BARREL SECTIONS

TRRCB 10-10-12

SHEET 2 OF 2

ENGLISHLRFDSIGNEDTRIPLECULVERTS.DGN - TRRCB 10-10s2-12 - THIS SHEET ISSUED 04-12.

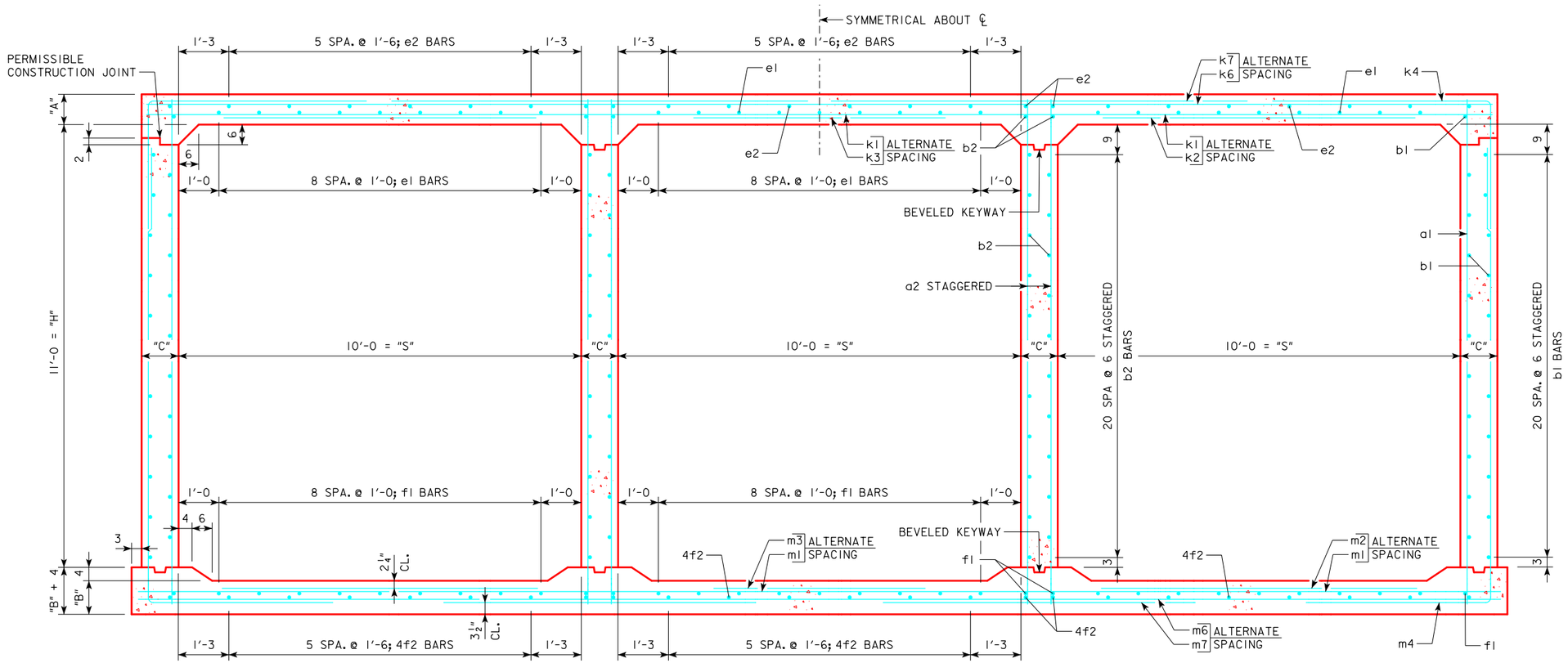

TRIPLE 10 x 11 BARREL SECTION

NOTES:

1. DIMENSIONS LISTED ON THIS SHEET TO BE USED IN CONJUNCTION WITH SHEET TRRCB G2-12.
2. DIMENSIONS "A", "B", "C", "D", "E", AND "SP." LISTED IN THE BAR LIST ARE IN INCHES.

LATEST REVISION DATE

APPROVED BY BRIDGE ENGINEER

IOWA DOT Highway Division

STANDARD DESIGN

TRIPLE REINFORCED CONCRETE BOX CULVERTS

APRIL, 2012

CULVERT BARREL DETAILS

10 x 11 BARREL SECTIONS

TRRCB 10-11-12

SHEET 1 OF 2

VARIABLE DIMENSIONS AND QUANTITIES FOR TRIPLE 10 x 11 BARREL SECTIONS

DIMENSIONS													
FILL	S	H	A	B	C	D	E	R	T	U	W	X	Z
0	10	11	13	11	11	9	9	0'-0	0'-0	6'-6	2'-6	4'-5	4'-0
1	10	11	12.5	11	11	9	9	0'-6	0'-2	6'-6	2'-7	4'-4	3'-8
2	10	11	9.5	10	11	9	9	1'-1	0'-11	6'-4	2'-1	3'-2	3'-6
3-6	10	11	9	10	11	9	9	2'-4	2'-1	4'-10	2'-1	2'-10	3'-10
7-8	10	11	8	10.5	11	9	9	2'-6	2'-0	3'-7	2'-1	2'-10	3'-5
9-10	10	11	9	11	11	9	9	2'-7	2'-1	3'-6	2'-9	3'-6	3'-6
11-12	10	11	9.5	12	11	9	9	2'-7	2'-0	3'-6	2'-6	3'-5	3'-6
13-15	10	11	11.5	14	11	9	9	2'-7	1'-9	3'-4	2'-3	3'-4	3'-6
16-17	10	11	12.5	15	11.5	9	9	2'-7	1'-8	3'-5	2'-1	3'-3	3'-6
18-19	10	11	13	15.5	12.5	6	9	3'-0	2'-0	3'-5	2'-0	3'-1	3'-6
20-21	10	11	14	16.5	13	9	6	3'-0	1'-11	3'-6	1'-9	3'-2	3'-7
22-23	10	11	15	17.5	13.5	9	6	2'-11	1'-6	3'-7	1'-7	3'-1	3'-8
24-25	10	11	16	18.5	14	9	9	2'-10	1'-4	3'-7	1'-5	3'-0	3'-9

BAR LIST																																														
	a1			a2			b1			b2			e1			e2			f1			f2			k1			k2			k3			k4						k6			k7		
FILL	SIZE	SP.	L	SIZE	SP.	L	SIZE	SP.	NO.	SIZE	SP.	NO.	SIZE	SP.	NO.	SIZE	SP.	NO.	SIZE	SP.	NO.	SIZE	SP.	NO.	SIZE	SP.	L	SIZE	SP.	L	SIZE	SP.	L	SIZE	SP.	L	H	V	SIZE	SP.	L	SIZE	SP.	L
0	4	12	12'-11	7	9	12'-11	4	6	44	4	6	46	4	12	27	4	18	24	4	12	33	4	18	24	6	18	33'-4	6	18	11'-2	6	18	10'-11	6	9	10'-4	6'-9	3'-7	5	18	33'-4	6	18	13'-0
1	4	12	12'-10	7	9	12'-10	4	6	44	4	6	46	4	12	27	4	18	24	4	12	33	4	18	24	6	18	33'-4	6	18	11'-0	6	18	9'-11	6	9	10'-4	6'-9	3'-7	5	18	33'-4	6	18	13'-0
2	4	9	12'-6	7	9	12'-6	4	6	44	4	6	46	4	12	27	4	18	24	4	12	33	4	18	24	5	12	33'-4	5	12	10'-3	4	12	8'-9	6	9	9'-11	6'-7	3'-4	4	9	33'-4	4	9	12'-8
3-6	4	9	12'-6	7	9	12'-6	4	6	44	4	6	46	4	12	27	4	18	24	4	12	33	4	18	24	5	9	33'-4	4	9	7'-9	4	9	6'-3	6	9	8'-8	5'-5	3'-3	5	12	33'-4	5	12	10'-4
7-8	4	9	12'-5	7	9	12'-5	4	6	44	4	6	46	4	12	27	4	18	24	4	12	33	4	18	24	5	12	33'-4	5	12	7'-7	4	12	5'-11	5	6	6'-10	4'-0	2'-10	5	12	33'-4	6	12	7'-3
9-10	4	12	12'-7	7	9	12'-7	4	6	44	4	6	46	4	12	27	4	18	24	4	12	33	4	18	24	5	12	33'-4	5	12	7'-9	4	12	5'-9	5	6	6'-11	4'-0	2'-11	5	12	33'-4	6	12	7'-1
11-12	5	12	12'-8	7	9	12'-8	4	6	44	4	6	46	4	12	27	4	18	24	4	12	33	4	18	24	5	12	33'-4	5	12	7'-11	4	12	5'-9	5	6	6'-11	3'-11	3'-0	4	12	33'-4	7	12	7'-2
13-15	5	9	13'-0	7	9	13'-0	4	6	44	4	6	46	4	12	27	4	18	24	4	12	33	4	18	24	5	12	33'-4	5	12	8'-8	4	12	5'-9	6	9	7'-7	4'-1	3'-6	5	12	33'-4	6	12	6'-11
16-17	6	12	13'-2	7	9	13'-2	4	6	44	4	6	46	4	12	27	4	18	24	4	12	33	4	18	24	5	12	33'-6	5	12	8'-10	5	12	5'-10	6	9	7'-8	4'-1	3'-7	5	12	33'-6	6	12	7'-1
18-19	4	6	13'-3	7	9	13'-3	4	6	44	4	6	46	4	12	27	4	18	24	4	12	33	4	18	24	5	9	33'-10	4	9	8'-4	4	9	5'-0	5	6	7'-4	4'-1	3'-3	4	12	33'-10	7	12	7'-1
20-21	6	9	13'-5	6	6	13'-5	4	6	44	4	6	46	4	12	27	4	18	24	4	12	33	4	18	24	5	9	34'-0	4	9	8'-7	4	9	5'-1	6	9	7'-9	4'-1	3'-8	4	12	34'-0	7	12	7'-3
22-23	6	9	13'-7	6	6	13'-7	4	6	44	4	6	46	4	12	27	4	18	24	4	12	33	4	18	24	5	9	34'-2	4	9	9'-6	4	9	5'-4	5	6	7'-7	4'-2	3'-5	5	12	34'-2	6	12	7'-5
24-25	5	12	13'-9	8	9	13'-9	4	6	44	4	6	46	4	12	27	4	18	24	4	12	33	4	18	24	5	9	34'-4	4	9	9'-10	4	9	5'-6	7	9	8'-8	4'-4	4'-4	5	12	34'-4	6	12	7'-6

BAR LIST																																														
	k9			m1			m2			m3			m4					m6			m7			m9			QUANTITIES				
																											CONCRETE (CY/FT)				STEEL
FILL	SIZE	SP.	L	SIZE	SP.	L	SIZE	SP.	L	SIZE	SP.	L	SIZE	SP.	L	H	V	SIZE	SP.	L	SIZE	SP.	L	SIZE	SP.	L	SLAB	FLOOR	WALLS	TOTAL	(LB/FT)
0	6	4.5	33'-4	5	12	33'-10	4	12	7'-2	4	12	2'-1	6	9	20'-7	9'-3	11'-4	5	18	33'-10	7	18	7'-11	7	4.5	33'-10	1.443	1.247	1.437	4.127	571.16
1	6	4.5	33'-4	5	12	33'-10	4	12	7'-1	4	12	2'-3	6	9	17'-10	6'-6	11'-4	4	9	33'-10	4	9	7'-4	4	4.5	33'-10	1.391	1.247	1.437	4.075	550.71
2	4	4.5	33'-4	5	12	33'-10	5	12	7'-9	4	12	4'-7	6	9	16'-5	5'-2	11'-3	4	9	33'-10	5	9	7'-1	5	4.5	33'-10	1.080	1.141	1.437	3.658	555.92
3-6	5	4.5	33'-4	5	12	33'-10	5	12	7'-10	4	12	5'-3	6	9	15'-10	4'-7	11'-3	5	18	33'-10	8	18	7'-9	8	4.5	33'-10	1.028	1.141	1.437	3.606	565.21
7-8	6	4.5	33'-4	5	12	33'-10	5	12	7'-10	4	12	5'-3	5	6	15'-4	4'-0	11'-4	5	12	33'-10	6	12	6'-11	6	4.5	33'-10	0.924	1.194	1.437	3.555	547.39
9-10	6	4.5	33'-4	5	9	33'-10	4	9	6'-7	4	9	3'-11	5	6	15'-3	3'-11	11'-4	4	12	33'-10	7	12	7'-1	7	4.5	33'-10	1.028	1.247	1.437	3.712	556.79
11-12	7	4.5	33'-4	5	9	33'-10	4	9	7'-2	4	9	4'-1	5	6	15'-5	4'-0	11'-5	4	12	33'-10	7	12	7'-1	7	4.5	33'-10	1.080	1.352	1.437	3.869	556.97
13-15	6	4.5	33'-4	5	9	33'-10	4	9	8'-0	4	9	4'-3	6	9	15'-9	4'-2	11'-7	5	18	33'-10	8	18	7'-4	8	4.5	33'-10	1.287	1.563	1.437	4.287	577.34
16-17	6	4.5	33'-6	5	9	34'-0	4	9	8'-4	4	9	4'-6	6	9	15'-10	4'-2	11'-8	5	18	34'-0	8	18	7'-4	8	4.5	34'-0	1.401	1.678	1.502	4.581	587.71
18-19	7	4.5	33'-10	5	9	34'-4	4	9	8'-7	4	9	4'-10	5	6	15'-11	4'-2	11'-9	5	12	34'-4	6	12	7'-3	6	4.5	34'-4	1.472	1.751	1.632	4.855	591.05
20-21	7	4.5	34'-0	6	12	34'-6	5	12	8'-11	4	12	4'-9	6	9	16'-0	4'-2	11'-10	5	12	34'-6	6	12	7'-5	6	4.5	34'-6	1.587	1.869	1.697	5.153	629.11
22-23	6	4.5	34'-2	6	12	34'-8	5	12	9'-6	4	12	5'-0	5	6	16'-2	4'-3	11'-11	5	12	34'-8	6	12	7'-7	6	4.5	34'-8	1.704	1.987	1.763	5.454	639.66
24-25	6	4.5	34'-4	6	12	34'-10	5	12	10'-1	4	12	5'-2	7	9	16'-4	4'-4	12'-0	5	12	34'-10	6	12	7'-10	6	4.5	34'-10	1.821	2.107	1.828	5.756	674.24

BENT BAR DETAIL

BARS	D
5	$3\frac{3}{4}$
6	$4\frac{1}{2}$
7	$5\frac{1}{4}$

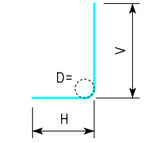

k4 & m4

NOTE:
ALL DIMENSIONS ARE OUT TO OUT.
D = PIN DIAMETER.

NOTES:

1. DIMENSIONS LISTED ON THIS SHEET TO BE USED IN CONJUNCTION WITH SHEET TRRCB G2-12.
2. DIMENSIONS "A", "B", "C", "D", "E", AND "SP." LISTED IN THE BAR LIST ARE IN INCHES.

LATEST REVISION DATE

APPROVED BY BRIDGE ENGINEER

IOWA DOT Highway Division

STANDARD DESIGN

TRIPLE REINFORCED CONCRETE BOX CULVERTS

APRIL, 2012

CULVERT BARREL DETAILS

10 x 11 BARREL SECTIONS

TRRCB 10-11-12

SHEET 2 OF 2

ENGLISHLRFDSIGNEDTRIPLECULVERTS.DGN - TRRCB 10-11s2-12 - THIS SHEET ISSUED 04-12.

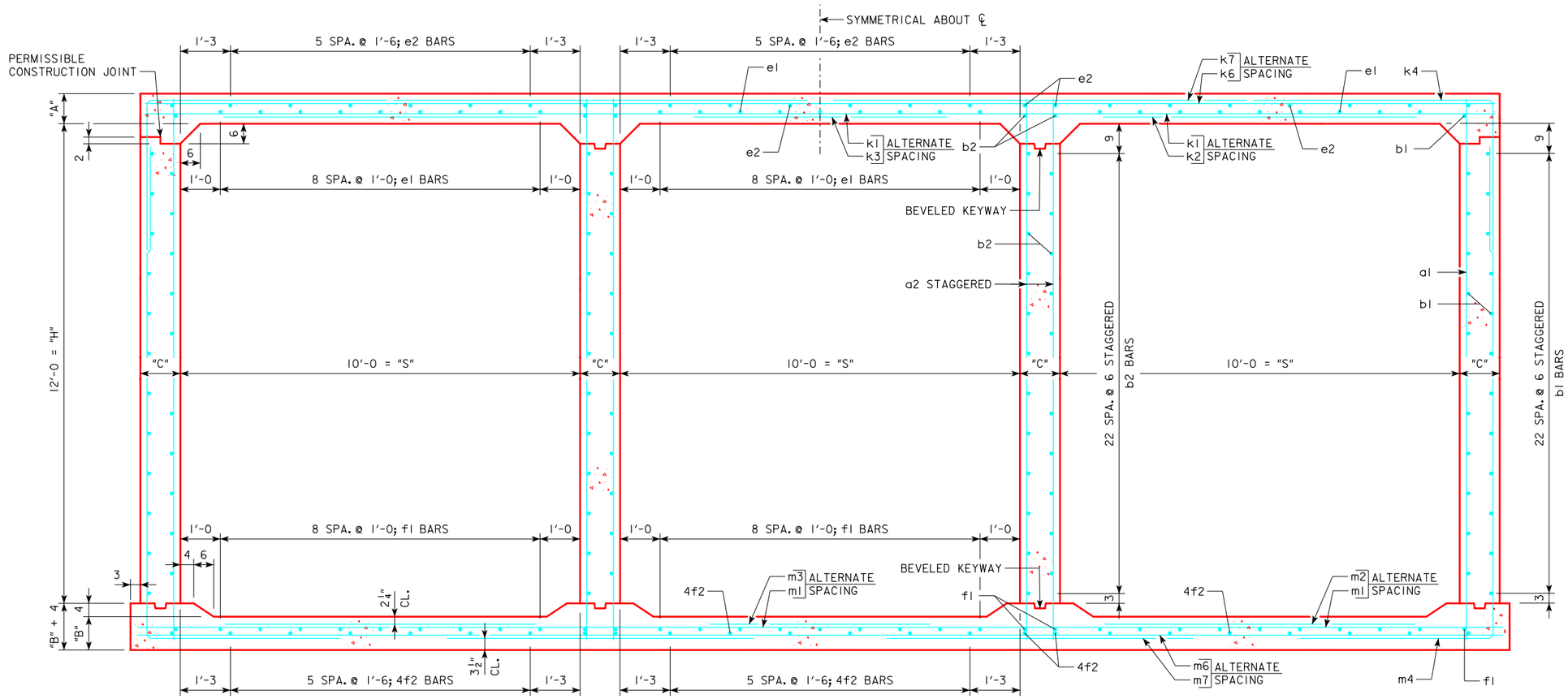

TRIPLE 10 x 12 BARREL SECTION

NOTES:

1. DIMENSIONS LISTED ON THIS SHEET TO BE USED IN CONJUNCTION WITH SHEET TRRCB G2-12.
2. DIMENSIONS "A", "B", "C", "D", "E", AND "SP." LISTED IN THE BAR LIST ARE IN INCHES.

LATEST REVISION DATE

APPROVED BY BRIDGE ENGINEER

IOWA DOT Highway Division

STANDARD DESIGN

TRIPLE REINFORCED CONCRETE BOX CULVERTS

APRIL, 2012

CULVERT BARREL DETAILS

10 x 12 BARREL SECTIONS

TRRCB 10-12-12

SHEET 1 OF 2

ENGLISHLRFDSIGNEDTRIPLECULVERTS.DGN - TRRCB 10-12s1-12 - THIS SHEET ISSUED 04-12.

VARIABLE DIMENSIONS AND QUANTITIES FOR TRIPLE 10 x 12 BARREL SECTIONS

DIMENSIONS													
FILL	S	H	A	B	C	D	E	R	T	U	W	X	Z
0	10	12	13	11.5	12	9	9	0'-0	0'-0	6'-7	2'-7	4'-6	3'-10
1	10	12	12.5	11	12	9	9	0'-6	0'-3	6'-7	2'-7	3'-9	3'-11
2	10	12	9.5	10	12	9	9	0'-8	0'-9	6'-5	2'-1	3'-1	3'-6
3-6	10	12	9	10	12	9	9	2'-4	2'-1	5'-1	2'-1	2'-9	3'-10
7-8	10	12	8	10.5	12	9	9	2'-6	2'-1	3'-7	2'-1	2'-8	3'-5
9-10	10	12	9	11.5	12	6	9	2'-7	2'-1	3'-6	2'-1	2'-9	3'-8
11-12	10	12	9.5	12	12	6	9	2'-7	2'-1	3'-5	2'-6	3'-5	3'-6
13-15	10	12	11.5	14	12.5	6	9	2'-4	1'-7	3'-5	2'-4	3'-2	3'-7
16-17	10	12	12.5	15	13	9	6	2'-6	1'-9	3'-5	2'-2	3'-1	3'-7
18-19	10	12	13	15.5	13.5	9	6	3'-0	2'-1	3'-5	2'-0	3'-0	3'-7
20-21	10	12	14	16.5	14	9	9	2'-11	1'-11	3'-6	1'-9	3'-0	3'-8
22-23	10	12	14.5	17.5	14.5	6	9	2'-9	1'-9	3'-7	1'-7	2'-11	3'-8
24-25	10	12	16.5	18.5	15	6	9	2'-9	1'-4	3'-8	1'-6	2'-10	3'-10

BAR LIST																																															
	a1			a2			b1			b2			e1			e2			f1			f2			k1			k2			k3			k4					k6			k7		
FILL	SIZE	SP.	L	SIZE	SP.	L	SIZE	SP.	NO.	SIZE	SP.	NO.	SIZE	SP.	NO.	SIZE	SP.	NO.	SIZE	SP.	NO.	SIZE	SP.	NO.	SIZE	SP.	L	SIZE	SP.	L	SIZE	SP.	L	SIZE	SP.	L	H	V	SIZE	SP.	L	SIZE	SP.	L
0	4	9	13'-11	7	9	13'-11	4	6	48	4	6	50	4	12	27	4	18	24	4	12	33	4	18	24	6	18	33'-8	6	18	11'-4	6	18	11'-0	6	9	10'-5	6'-10	3'-7	5	18	33'-8	6	18	13'-2
1	4	9	13'-10	7	9	13'-10	4	6	48	4	6	50	4	12	27	4	18	24	4	12	33	4	18	24	6	18	33'-8	6	18	11'-1	6	18	10'-0	6	9	10'-5	6'-10	3'-7	5	18	33'-8	6	18	13'-2
2	5	12	13'-6	7	9	13'-6	4	6	48	4	6	50	4	12	27	4	18	24	4	12	33	4	18	24	6	18	33'-8	6	18	10'-7	6	18	9'-8	7	9	10'-6	6'-8	3'-10	4	9	33'-8	4	9	12'-10
3-6	4	9	13'-6	7	9	13'-6	4	6	48	4	6	50	4	12	27	4	18	24	4	12	33	4	18	24	5	9	33'-8	4	9	7'-10	4	9	6'-4	7	9	9'-10	6'-0	3'-10	5	12	33'-8	5	12	10'-4
7-8	5	12	13'-5	7	9	13'-5	4	6	48	4	6	50	4	12	27	4	18	24	4	12	33	4	18	24	5	12	33'-8	5	12	7'-7	4	12	6'-0	7	9	8'-2	4'-6	3'-8	5	12	33'-8	6	12	7'-2
9-10	4	6	13'-7	7	9	13'-7	4	6	48	4	6	50	4	12	27	4	18	24	4	12	33	4	18	24	5	12	33'-8	5	12	7'-10	4	12	5'-10	5	6	7'-2	4'-3	2'-11	5	12	33'-8	6	12	7'-0
11-12	4	6	13'-8	7	9	13'-8	4	6	48	4	6	50	4	12	27	4	18	24	4	12	33	4	18	24	5	12	33'-8	5	12	7'-10	4	12	5'-10	7	9	8'-3	4'-5	3'-10	5	12	33'-8	6	12	6'-11
13-15	4	6	14'-0	7	9	14'-0	4	6	48	4	6	50	4	12	27	4	18	24	4	12	33	4	18	24	6	18	33'-10	6	18	9'-0	6	18	6'-4	5	6	7'-7	4'-5	3'-2	5	12	33'-10	6	12	7'-0
16-17	6	12	14'-2	6	6	14'-2	4	6	48	4	6	50	4	12	27	4	18	24	4	12	33	4	18	24	5	12	34'-0	5	12	8'-9	5	12	6'-1	5	6	7'-8	4'-5	3'-3	5	12	34'-0	6	12	7'-0
18-19	6	9	14'-3	6	6	14'-3	4	6	48	4	6	50	4	12	27	4	18	24	4	12	33	4	18	24	5	9	34'-2	4	9	8'-2	4	9	5'-2	5	6	7'-8	4'-5	3'-3	5	12	34'-2	6	12	7'-1
20-21	6	9	14'-5	8	9	14'-5	4	6	48	4	6	50	4	12	27	4	18	24	4	12	33	4	18	24	5	9	34'-4	4	9	8'-7	4	9	5'-4	5	6	7'-10	4'-6	3'-4	5	12	34'-4	6	12	7'-3
22-23	4	6	14'-7	8	9	14'-7	4	6	48	4	6	50	4	12	27	4	18	24	4	12	33	4	18	24	5	9	34'-6	4	9	8'-11	4	9	5'-8	7	9	9'-0	4'-6	4'-6	4	12	34'-6	7	12	7'-4
24-25	4	6	14'-10	8	9	14'-10	4	6	48	4	6	50	4	12	27	4	18	24	4	12	33	4	18	24	5	9	34'-8	4	9	9'-10	4	9	5'-9	7	9	9'-4	4'-8	4'-8	5	18	34'-8	8	18	7'-8

BAR LIST																																				QUANTITIES				
	k9			m1			m2			m3			m4					m6			m7			m9			CONCRETE (CY/FT)				STEEL
FILL	SIZE	SP.	L	SIZE	SP.	L	SIZE	SP.	L	SIZE	SP.	L	SIZE	SP.	L	H	V	SIZE	SP.	L	SIZE	SP.	L	SIZE	SP.	L	SLAB	FLOOR	WALLS	TOTAL	(LB/FT)
0	6	4.5	33'-8	5	12	34'-2	4	12	7'-2	4	12	2'-0	6	9	21'-8	9'-3	12'-5	4	9	34'-2	4	9	7'-7	4	4.5	34'-2	1.462	1.315	1.715	4.492	589.42
1	6	4.5	33'-8	5	12	34'-2	4	12	7'-0	4	12	3'-6	6	9	18'-10	6'-6	12'-4	5	18	34'-2	7	18	7'-9	7	4.5	34'-2	1.410	1.262	1.715	4.387	582.42
2	4	4.5	33'-8	5	12	34'-2	5	12	7'-8	4	12	4'-10	6	9	17'-6	5'-3	12'-3	4	9	34'-2	5	9	7'-0	5	4.5	34'-2	1.095	1.156	1.715	3.966	601.68
3-6	5	4.5	33'-8	5	12	34'-2	5	12	7'-9	4	12	5'-6	7	9	17'-2	4'-11	12'-3	5	12	34'-2	6	12	7'-8	6	4.5	34'-2	1.043	1.156	1.715	3.914	633.61
7-8	6	4.5	33'-8	5	12	34'-2	5	12	7'-10	4	12	5'-8	7	9	16'-10	4'-6	12'-4	5	12	34'-2	6	12	6'-10	6	4.5	34'-2	0.938	1.209	1.715	3.862	614.84
9-10	6	4.5	33'-8	5	12	34'-2	5	12	7'-11	4	12	5'-6	5	6	16'-8	4'-3	12'-5	5	18	34'-2	8	18	7'-4	8	4.5	34'-2	1.043	1.315	1.715	4.073	579.79
11-12	6	4.5	33'-8	5	9	34'-2	4	9	7'-4	4	9	4'-2	7	9	16'-10	4'-5	12'-5	4	12	34'-2	7	12	7'-1	7	4.5	34'-2	1.095	1.368	1.715	4.178	629.71
13-15	6	4.5	33'-10	5	9	34'-4	4	9	7'-8	4	9	4'-8	5	6	17'-1	4'-6	12'-7	5	18	34'-4	8	18	7'-4	8	4.5	34'-4	1.314	1.591	1.787	4.692	601.18
16-17	6	4.5	34'-0	5	9	34'-6	4	9	8'-3	4	9	4'-11	5	6	17'-2	4'-6	12'-8	5	18	34'-6	8	18	7'-4	8	4.5	34'-6	1.428	1.707	1.858	4.993	617.87
18-19	6	4.5	34'-2	5	9	34'-8	4	9	8'-7	4	9	5'-2	5	6	17'-3	4'-6	12'-9	5	12	34'-8	6	12	7'-4	6	4.5	34'-8	1.491	1.771	1.929	5.191	643.71
20-21	6	4.5	34'-4	6	12	34'-10	5	12	8'-11	4	12	5'-2	5	6	17'-5	4'-7	12'-10	5	12	34'-10	6	12	7'-6	6	4.5	34'-10	1.607	1.890	2.000	5.497	673.95
22-23	7	4.5	34'-6	6	12	35'-0	5	12	9'-6	4	12	5'-4	7	9	17'-7	4'-8	12'-11	5	12	35'-0	6	12	7'-7	6	4.5	35'-0	1.671	2.009	2.072	5.752	701.26
24-25	8	4.5	34'-8	6	12	35'-2	5	12	9'-9	4	12	5'-7	7	9	17'-8	4'-8	13'-0	5	12	35'-2	6	12	7'-10	6	4.5	35'-2	1.898	2.130	2.143	6.171	710.89

BENT BAR DETAIL

BARS	D
5	$3\frac{3}{4}$
6	$4\frac{1}{2}$
7	$5\frac{1}{4}$

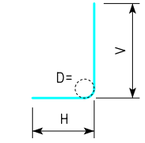

k4 & m4

NOTE:
ALL DIMENSIONS ARE OUT TO OUT.
D = PIN DIAMETER.

NOTES:

1. DIMENSIONS LISTED ON THIS SHEET TO BE USED IN CONJUNCTION WITH SHEET TRRCB G2-12.
2. DIMENSIONS "A", "B", "C", "D", "E", AND "SP." LISTED IN THE BAR LIST ARE IN INCHES.

LATEST REVISION DATE

APPROVED BY BRIDGE ENGINEER

IOWA DOT Highway Division

STANDARD DESIGN

TRIPLE REINFORCED CONCRETE BOX CULVERTS

APRIL, 2012

CULVERT BARREL DETAILS

10 x 12 BARREL SECTIONS

TRRCB 10-12-12

SHEET 2 OF 2

ENGLISHLRFDSIGNEDTRIPLECULVERTS.DGN - TRRCB 10-12s2-12 - THIS SHEET ISSUED 04-12.

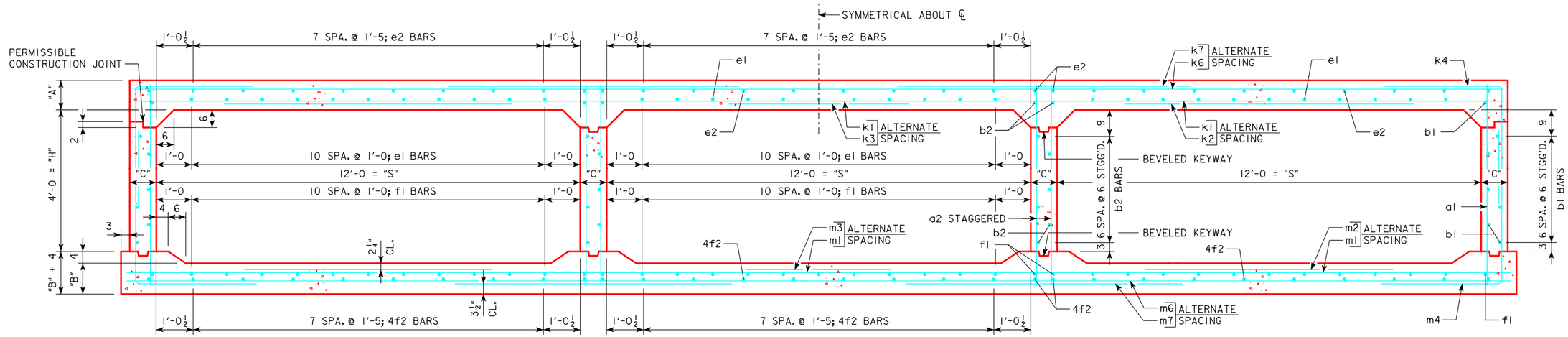

TRIPLE 12 x 4 BARREL SECTION

BENT BAR DETAIL

BARS	D
4	3
5	3¾
6	4½
7	5¼

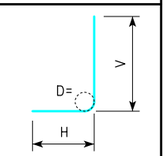

k4 & m4

NOTE:
ALL DIMENSIONS ARE OUT TO OUT.
D = PIN DIAMETER.

NOTES:

1. DIMENSIONS LISTED ON THIS SHEET TO BE USED IN CONJUNCTION WITH SHEET TRRCB G2-12.
2. DIMENSIONS "A", "B", "C", "D", "E", AND "SP." LISTED IN THE BAR LIST ARE IN INCHES.

VARIABLE DIMENSIONS AND QUANTITIES FOR TRIPLE 12 x 4 BARREL SECTIONS

DIMENSIONS

FILL	S	H	A	B	C	D	E	R	T	U	W	X	Z
0	12	4	14	11	9	9	9	0'-1	0'-0	7'-0	2'-9	4'-2	4'-3
1	12	4	13.5	11	9	9	9	0'-7	0'-4	6'-8	3'-0	5'-0	4'-3
2	12	4	10	10	9	9	9	2'-0	2'-0	5'-8	3'-8	5'-4	4'-3
3-6	12	4	10	10.5	9	6	9	2'-5	2'-0	4'-11	3'-4	4'-2	4'-2
7-8	12	4	10	11	9	9	9	3'-10	2'-10	4'-0	3'-1	4'-5	3'-10
9-10	12	4	11	12.5	9	9	9	3'-11	2'-8	4'-0	2'-10	4'-3	3'-10
11-12	12	4	12	13.5	9	9	9	4'-0	2'-6	3'-11	2'-9	4'-3	3'-10
13-15	12	4	13.5	15.5	9	6	9	4'-2	2'-4	3'-10	2'-5	4'-10	3'-10
16-17	12	4	14.5	16.5	9	9	9	3'-10	1'-7	3'-11	2'-1	4'-4	3'-10
18-19	12	4	15.5	17.5	9	9	9	3'-10	1'-7	3'-11	1'-8	4'-4	3'-11
20-21	12	4	16.5	18.5	9	9	9	3'-10	1'-6	4'-0	1'-7	4'-8	4'-0
22-23	12	4	18	20	9.5	9	6	3'-11	1'-1	4'-1	1'-2	4'-9	4'-1
24-25	12	4	19.5	21	9.5	9	6	4'-0	0'-11	4'-2	1'-1	4'-7	4'-2

BAR LIST

FILL	a1 SIZE	a1 SP.	a1 L	a2 SIZE	a2 SP.	a2 L	b1 SIZE	b1 SP.	b1 NO.	b2 SIZE	b2 SP.	b2 NO.	e1 SIZE	e1 SP.	e1 NO.	e2 SIZE	e2 SP.	e2 NO.	f1 SIZE	f1 SP.	f1 NO.	f2 SIZE	f2 SP.	f2 NO.	k1 SIZE	k1 SP.	k1 L	k2 SIZE	k2 SP.	k2 L	k3 SIZE	k3 SP.	k3 L	k4 SIZE	k4 SP.	k4 L	k4 H	k4 V	k6 SIZE	k6 SP.	k6 L	k7 SIZE	k7 SP.	k7 L
0	4	12	6'-0	6	9	6'-0	4	6	16	4	6	18	4	12	33	4	17	30	4	12	39	4	17	30	5	12	38'-8	5	12	12'-11	5	12	12'-7	6	12	6'-7	2'-11	3'-8	5	18	38'-8	7	18	14'-8
1	4	12	5'-11	6	9	5'-11	4	6	16	4	6	18	4	12	33	4	17	30	4	12	39	4	17	30	6	18	38'-8	6	18	12'-7	6	18	11'-7	6	12	6'-9	3'-1	3'-8	5	18	38'-8	7	18	14'-4
2	5	12	5'-7	7	9	5'-7	4	6	16	4	6	18	4	12	33	4	17	30	4	12	39	4	17	30	5	9	38'-8	4	9	10'-0	4	9	8'-9	6	9	6'-8	3'-4	3'-4	5	18	38'-8	8	18	13'-9
3-6	4	6	5'-7	7	9	5'-7	4	6	16	4	6	18	4	12	33	4	17	30	4	12	39	4	17	30	6	12	38'-8	5	12	9'-8	4	12	7'-11	6	9	6'-10	3'-5	3'-5	5	12	38'-8	6	12	10'-7
7-8	5	12	5'-8	6	9	5'-8	4	6	16	4	6	18	4	12	33	4	17	30	4	12	39	4	17	30	5	9	38'-8	4	9	8'-2	4	9	5'-1	6	9	6'-3	2'-11	3'-4	4	9	38'-8	6	9	8'-3
9-10	4	12	5'-10	6	9	5'-10	4	6	16	4	6	18	4	12	33	4	17	30	4	12	39	4	17	30	5	9	38'-8	4	9	8'-9	4	9	4'-11	5	6	5'-8	2'-7	3'-1	5	12	38'-8	7	12	8'-3
11-12	4	12	6'-0	6	9	6'-0	4	6	16	4	6	18	4	12	33	4	17	30	4	12	39	4	17	30	5	9	38'-8	4	9	9'-5	4	9	4'-9	5	6	5'-6	2'-4	3'-2	5	12	38'-8	7	12	8'-2
13-15	4	6	6'-4	6	9	6'-4	4	6	16	4	6	18	4	12	33	4	17	30	4	12	39	4	17	30	6	12	38'-8	5	12	9'-10	4	12	4'-5	4	6	5'-7	2'-4	3'-3	5	9	38'-8	6	9	8'-2
16-17	5	12	6'-6	6	9	6'-6	4	6	16	4	6	18	4	12	33	4	17	30	4	12	39	4	17	30	7	18	38'-8	7	18	11'-4	4	18	5'-1	4	6	5'-8	2'-4	3'-4	5	9	38'-8	6	9	8'-4
18-19	4	9	6'-8	6	9	6'-8	4	6	16	4	6	18	4	12	33	4	17	30	4	12	39	4	17	30	7	18	38'-8	7	18	11'-4	4	18	5'-1	4	6	5'-10	2'-5	3'-5	5	9	38'-8	6	9	8'-5
20-21	4	9	6'-10	6	9	6'-10	4	6	16	4	6	18	4	12	33	4	17	30	4	12	39	4	17	30	5	9	38'-8	5	9	11'-5	4	9	5'-1	4	6	5'-11	2'-5	3'-6	5	9	38'-8	6	9	8'-7
22-23	4	9	7'-1	5	6	7'-1	4	6	16	4	6	18	4	12	33	4	17	30	4	12	39	4	17	30	5	9	38'-10	5	9	11'-11	4	9	5'-0	4	6	6'-2	2'-6	3'-8	5	9	38'-10	6	9	8'-10
24-25	4	12	7'-3	5	6	7'-3	4	6	16	4	6	18	4	12	33	4	17	30	4	12	39	4	17	30	5	9	38'-10	5	9	12'-1	4	9	4'-10	5	9	6'-5	2'-7	3'-10	5	9	38'-10	6	9	9'-1

BAR LIST

FILL	k9 SIZE	k9 SP.	k9 L	m1 SIZE	m1 SP.	m1 L	m2 SIZE	m2 SP.	m2 L	m3 SIZE	m3 SP.	m3 L	m4 SIZE	m4 SP.	m4 L	m4 H	m4 V	m6 SIZE	m6 SP.	m6 L	m7 SIZE	m7 SP.	m7 L	m9 SIZE	m9 SP.	m9 L
0	7	4.5	38'-8	4	9	39'-2	4	9	8'-4	4	9	4'-5	7	12	8'-4	4'-0	4'-4	4	9	39'-2	5	9	8'-6	5	4.5	39'-2
1	7	4.5	38'-8	5	12	39'-2	4	12	7'-9	4	12	2'-9	7	12	8'-1	3'-9	4'-4	4	12	39'-2	6	12	8'-6	6	4.5	39'-2
2	8	4.5	38'-8	5	9	39'-2	4	9	6'-5	4	9	2'-1	6	9	7'-8	3'-5	4'-3	4	12	39'-2	7	12	8'-7	7	4.5	39'-2
3-6	6	4.5	38'-8	5	9	39'-2	4	9	7'-0	4	9	4'-1	6	9	7'-9	3'-5	4'-4	5	12	39'-2	7	12	8'-6	7	4.5	39'-2
7-8	6	4.5	38'-8	6	12	39'-2	5	12	7'-7	4	12	3'-11	6	9	7'-5	3'-1	4'-4	5	9	39'-2	6	9	7'-10	6	4.5	39'-2
9-10	7	4.5	38'-8	6	12	39'-2	5	12	8'-6	4	12	4'-3	5	6	7'-2	2'-8	4'-6	5	12	39'-2	7	12	8'-0	7	4.5	39'-2
11-12	7	4.5	38'-8	6	12	39'-2	5	12	8'-9	4	12	4'-3	5	6	7'-0	2'-5	4'-7	5	12	39'-2	7	12	8'-0	7	4.5	39'-2
13-15	6	4.5	38'-8	6	12	39'-2	5	12	9'-10	4	12	3'-1	4	6	7'-2	2'-5	4'-9	5	12	39'-2	7	12	8'-2	7	4.5	39'-2
16-17	6	4.5	38'-8	5	9	39'-2	5	9	10'-9	4	9	4'-1	4	6	7'-3	2'-5	4'-10	5	12	39'-2	7	12	8'-3	7	4.5	39'-2
18-19	6	4.5	38'-8	5	9	39'-2	5	9	11'-4	4	9	4'-1	4	6	7'-4	2'-5	4'-11	5	9	39'-2	6	9	8'-6	6	4.5	39'-2
20-21	6	4.5	38'-8	6	12	39'-2	6	12	11'-5	4	12	3'-5	4	6	7'-5	2'-5	5'-0	5	9	39'-2	6	9	8'-8	6	4.5	39'-2
22-23	6	4.5	38'-10	6	12	39'-4	6	12	11'-11	4	12	3'-4	4	6	7'-8	2'-7	5'-1	5	9	39'-4	6	9	8'-11	6	4.5	39'-4
24-25	6	4.5	38'-10	6	12	39'-4	6	12	12'-0	4	12	3'-8	5	9	7'-9	2'-7	5'-2	5	9	39'-4	6	9	9'-1	6	4.5	39'-4

QUANTITIES

FILL	CONCRETE (CY/FT) SLAB	FLOOR	WALLS	TOTAL	STEEL (LB/FT)
0	1.766	1.422	0.396	3.584	469.34
1	1.706	1.422	0.396	3.524	461.89
2	1.285	1.301	0.396	2.982	513.50
3-6	1.285	1.362	0.396	3.043	532.18
7-8	1.285	1.422	0.396	3.103	516.74
9-10	1.405	1.605	0.396	3.406	512.47
11-12	1.526	1.727	0.396	3.649	513.11
13-15	1.706	1.971	0.396	4.073	525.50
16-17	1.827	2.093	0.396	4.316	535.34
18-19	1.947	2.215	0.396	4.558	547.55
20-21	2.067	2.337	0.396	4.800	557.03
22-23	2.260	2.532	0.418	5.210	566.34
24-25	2.441	2.654	0.418	5.513	570.37

LATEST REVISION DATE

APPROVED BY BRIDGE ENGINEER

IOWA DOT Highway Division

STANDARD DESIGN

TRIPLE REINFORCED CONCRETE BOX CULVERTS

APRIL, 2012

CULVERT BARREL DETAILS

12 x 4 BARREL SECTIONS

TRRCB 12-4-12

ENGLISHLRFDSIGNEDTRIPLECULVERTS.DGN - TRRCB 12-4-12 - THIS SHEET ISSUED 04-12.

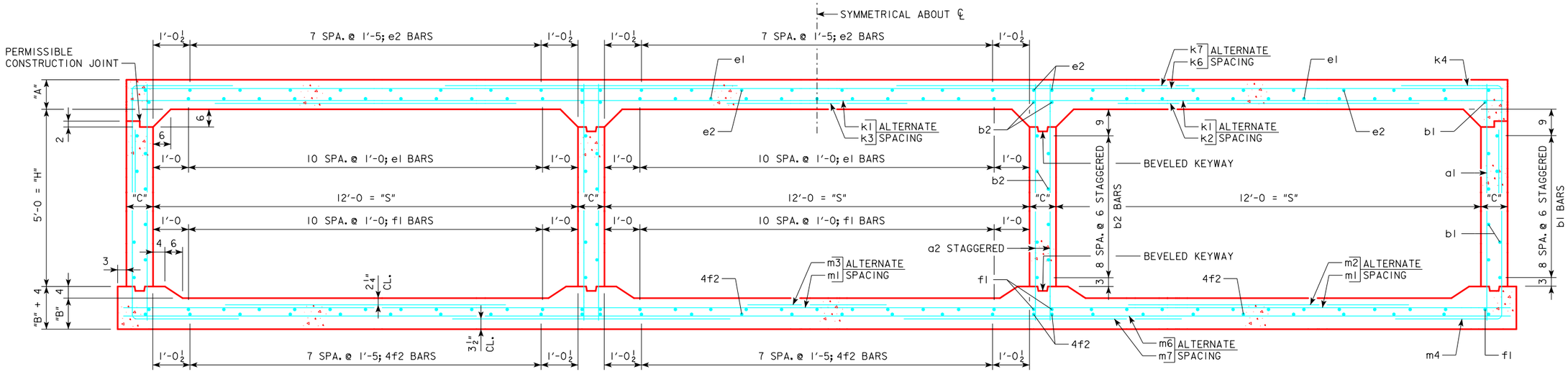

TRIPLE 12 x 5 BARREL SECTION

BENT BAR DETAIL

BARS	D
4	3
5	$3\frac{3}{4}$
6	$4\frac{1}{2}$
7	$5\frac{1}{4}$

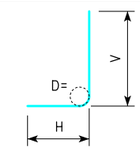

k4 & m4

NOTE:
ALL DIMENSIONS ARE OUT TO OUT.
D = PIN DIAMETER.

NOTES:

1. DIMENSIONS LISTED ON THIS SHEET TO BE USED IN CONJUNCTION WITH SHEET TRRCB G2-12.
2. DIMENSIONS "A", "B", "C", "D", "E", AND "SP." LISTED IN THE BAR LIST ARE IN INCHES.

VARIABLE DIMENSIONS AND QUANTITIES FOR TRIPLE 12 x 5 BARREL SECTIONS

	DIMENSIONS												
FILL	S	H	A	B	C	D	E	R	T	U	W	X	Z
0	12	5	14	11.5	9	9	9	0'-1	0'-0	7'-3	3'-0	5'-4	4'-4
1	12	5	13.5	11	9	9	9	0'-7	0'-3	6'-11	2'-8	4'-1	4'-3
2	12	5	10	10	9	9	9	2'-5	2'-0	5'-9	3'-7	5'-4	4'-1
3-6	12	5	10	10.5	9	9	9	2'-5	2'-0	5'-0	3'-4	4'-5	4'-2
7-8	12	5	10	11	9	9	9	3'-10	2'-9	3'-11	3'-0	4'-5	3'-10
9-10	12	5	11	13	9	9	9	3'-11	2'-7	4'-0	2'-11	4'-9	3'-9
11-12	12	5	12	14	9	9	9	4'-2	2'-8	3'-11	2'-9	4'-9	3'-9
13-15	12	5	13.5	15.5	9	6	9	4'-2	2'-3	3'-10	2'-3	4'-5	3'-10
16-17	12	5	14.5	16.5	9	9	9	3'-10	1'-7	3'-10	2'-1	4'-4	3'-10
18-19	12	5	15.5	17.5	9	9	9	3'-10	1'-7	3'-11	1'-8	4'-3	3'-11
20-21	12	5	16.5	18.5	9	9	9	3'-10	1'-6	3'-11	1'-7	4'-8	4'-0
22-23	12	5	18	20	9	9	9	4'-4	1'-1	4'-0	1'-2	4'-10	4'-1
24-25	12	5	19.5	21.5	9.5	9	6	4'-4	1'-0	4'-2	1'-0	4'-9	4'-2

	BAR LIST																																															
	a1			a2			b1			b2			e1			e2			f1			f2			k1			k2			k3			k4					k6			k7		
FILL	SIZE	SP.	L	SIZE	SP.	L	SIZE	SP.	NO.	SIZE	SP.	NO.	SIZE	SP.	NO.	SIZE	SP.	NO.	SIZE	SP.	NO.	SIZE	SP.	NO.	SIZE	SP.	L	SIZE	SP.	L	SIZE	SP.	L	SIZE	SP.	L	H	V	SIZE	SP.	L	SIZE	SP.	L
0	4	12	7'-0	6	9	7'-0	4	6	20	4	6	22	4	12	33	4	17	30	4	12	39	4	17	30	5	12	38'-8	5	12	12'-11	5	12	12'-7	6	12	6'-10	3'-2	3'-8	5	18	38'-8	7	18	14'-11
1	4	12	6'-11	6	9	6'-11	4	6	20	4	6	22	4	12	33	4	17	30	4	12	39	4	17	30	6	18	38'-8	6	18	12'-8	6	18	11'-7	6	12	6'-10	3'-2	3'-8	5	18	38'-8	7	18	14'-7
2	4	9	6'-7	7	9	6'-7	4	6	20	4	6	22	4	12	33	4	17	30	4	12	39	4	17	30	6	12	38'-8	5	12	10'-0	4	12	7'-11	6	9	6'-8	3'-4	3'-4	5	18	38'-8	8	18	13'-10
3-6	4	9	6'-7	7	9	6'-7	4	6	20	4	6	22	4	12	33	4	17	30	4	12	39	4	17	30	6	12	38'-8	5	12	10'-0	4	12	7'-11	6	9	6'-10	3'-5	3'-5	5	12	38'-8	6	12	10'-11
7-8	4	12	6'-8	6	9	6'-8	4	6	20	4	6	22	4	12	33	4	17	30	4	12	39	4	17	30	5	9	38'-8	4	9	8'-6	4	9	5'-1	6	9	6'-2	2'-10	3'-4	4	9	38'-8	6	9	8'-3
9-10	4	12	6'-11	6	9	6'-11	4	6	20	4	6	22	4	12	33	4	17	30	4	12	39	4	17	30	5	9	38'-8	4	9	8'-10	4	9	4'-11	5	6	5'-8	2'-7	3'-1	5	12	38'-8	7	12	8'-4
11-12	4	12	7'-1	6	9	7'-1	4	6	20	4	6	22	4	12	33	4	17	30	4	12	39	4	17	30	6	12	38'-8	5	12	8'-11	4	12	4'-5	5	6	5'-7	2'-5	3'-2	5	12	38'-8	7	12	8'-3
13-15	4	6	7'-4	6	9	7'-4	4	6	20	4	6	22	4	12	33	4	17	30	4	12	39	4	17	30	6	12	38'-8	5	12	10'-0	4	12	4'-5	4	6	5'-8	2'-5	3'-3	5	9	38'-8	6	9	8'-2
16-17	5	12	7'-6	6	9	7'-6	4	6	20	4	6	22	4	12	33	4	17	30	4	12	39	4	17	30	7	18	38'-8	7	18	11'-4	4	18	5'-1	4	6	5'-9	2'-5	3'-4	5	9	38'-8	6	9	8'-3
18-19	4	9	7'-8	6	9	7'-8	4	6	20	4	6	22	4	12	33	4	17	30	4	12	39	4	17	30	7	18	38'-8	7	18	11'-4	4	18	5'-1	4	6	5'-10	2'-5	3'-5	5	9	38'-8	6	9	8'-5
20-21	4	9	7'-10	6	9	7'-10	4	6	20	4	6	22	4	12	33	4	17	30	4	12	39	4	17	30	5	9	38'-8	5	9	11'-5	4	9	5'-1	4	6	6'-0	2'-6	3'-6	5	9	38'-8	6	9	8'-6
22-23	4	12	8'-1	6	9	8'-1	4	6	20	4	6	22	4	12	33	4	17	30	4	12	39	4	17	30	6	12	38'-8	6	12	11'-10	4	12	4'-1	6	12	6'-7	2'-7	4'-0	5	9	38'-8	6	9	8'-9
24-25	4	12	8'-4	5	6	8'-4	4	6	20	4	6	22	4	12	33	4	17	30	5	12	39	4	17	30	6	12	38'-10	6	12	12'-0	4	12	4'-2	5	9	6'-5	2'-8	3'-9	5	9	38'-10	6	9	9'-1

	BAR LIST																											QUANTITIES				
	k9			m1			m2			m3			m4					m6			m7			m9			CONCRETE (CY/FT)				STEEL
FILL	SIZE	SP.	L	SIZE	SP.	L	SIZE	SP.	L	SIZE	SP.	L	SIZE	SP.	L	H	V	SIZE	SP.	L	SIZE	SP.	L	SIZE	SP.	L	SLAB	FLOOR	WALLS	TOTAL	(LB/FT)
0	7	4.5	38'-8	5	12	39'-2	4	12	8'-1	4	12	2'-1	7	12	9'-10	4'-5	5'-5	4	12	39'-2	6	12	8'-8	6	4.5	39'-2	1.766	1.483	0.507	3.756	485.34
1	7	4.5	38'-8	4	9	39'-2	4	9	8'-7	4	9	4'-7	7	12	9'-6	4'-2	5'-4	4	9	39'-2	5	9	8'-6	5	4.5	39'-2	1.706	1.422	0.507	3.635	483.74
2	8	4.5	38'-8	5	9	39'-2	4	9	6'-9	4	9	2'-1	6	9	8'-9	3'-6	5'-3	5	9	39'-2	5	9	8'-4	5	4.5	39'-2	1.285	1.301	0.507	3.093	548.26
3-6	6	4.5	38'-8	6	12	39'-2	5	12	7'-3	4	12	3'-11	6	9	8'-9	3'-5	5'-4	5	12	39'-2	7	12	8'-6	7	4.5	39'-2	1.285	1.362	0.507	3.154	553.68
7-8	6	4.5	38'-8	6	12	39'-2	5	12	7'-11	4	12	3'-11	6	9	8'-4	3'-0	5'-4	5	9	39'-2	6	9	7'-10	6	4.5	39'-2	1.285	1.422	0.507	3.214	530.61
9-10	7	4.5	38'-8	6	12	39'-2	5	12	8'-7	4	12	3'-3	5	6	8'-1	2'-7	5'-6	4	9	39'-2	6	9	7'-10	6	4.5	39'-2	1.405	1.666	0.507	3.578	517.97
11-12	7	4.5	38'-8	6	12	39'-2	5	12	8'-10	4	12	3'-3	5	6	8'-1	2'-6	5'-7	5	12	39'-2	7	12	8'-0	7	4.5	39'-2	1.526	1.788	0.507	3.821	535.97
13-15	6	4.5	38'-8	5	9	39'-2	5	9	10'-5	4	9	3'-11	4	6	8'-2	2'-5	5'-9	5	12	39'-2	7	12	8'-2	7	4.5	39'-2	1.706	1.971	0.507	4.184	543.68
16-17	6	4.5	38'-8	5	9	39'-2	5	9	10'-9	4	9	4'-1	4	6	8'-4	2'-6	5'-10	5	12	39'-2	7	12	8'-4	7	4.5	39'-2	1.827	2.093	0.507	4.427	549.95
18-19	6	4.5	38'-8	5	9	39'-2	5	9	11'-4	4	9	4'-3	4	6	8'-5	2'-6	5'-11	5	9	39'-2	6	9	8'-6	6	4.5	39'-2	1.947	2.215	0.507	4.669	561.76
20-21	6	4.5	38'-8	6	12	39'-2	6	12	11'-5	4	12	3'-5	4	6	8'-6	2'-6	6'-0	5	9	39'-2	6	9	8'-8	6	4.5	39'-2	2.067	2.337	0.507	4.911	570.95
22-23	6	4.5	38'-8	6	12	39'-2	6	12	11'-10	4	12	3'-1	6	12	8'-8	2'-7	6'-1	5	9	39'-2	6	9	8'-11	6	4.5	39'-2	2.248	2.520	0.507	5.275	590.34
24-25	6	4.5	38'-10	6	12	39'-4	6	12	12'-1	4	12	3'-4	5	9	9'-0	2'-9	6'-3	5	9	39'-4	6	9	9'-2	6	4.5	39'-4	2.441	2.716	0.535	5.692	607.42

LATEST REVISION DATE

APPROVED BY BRIDGE ENGINEER

IOWA DOT Highway Division

STANDARD DESIGN

TRIPLE REINFORCED CONCRETE BOX CULVERTS

APRIL, 2012

CULVERT BARREL DETAILS

12 x 5 BARREL SECTIONS

TRRCB 12-5-12

ENGLISHLRFDSIGNEDTRIPLECULVERTS.DGN - TRRCB 12-5-12 - THIS SHEET ISSUED 04-12.

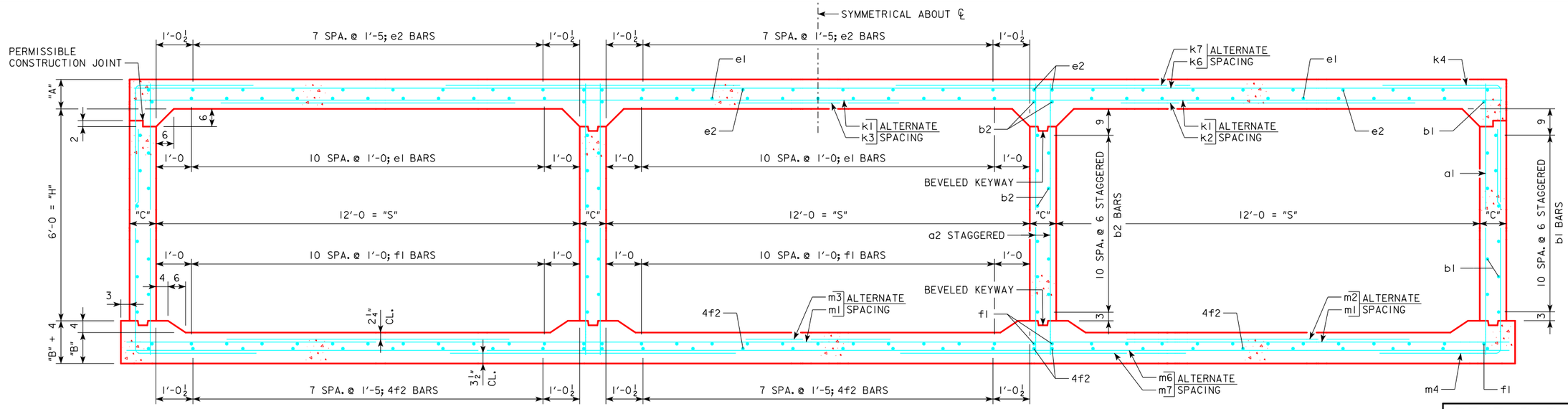

TRIPLE 12 x 6 BARREL SECTION

BENT BAR DETAIL

BARS	D
4	3
5	3¾
6	4½
7	5¼

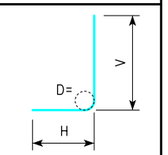

k4 & m4

NOTE:
ALL DIMENSIONS ARE OUT TO OUT.
D = PIN DIAMETER.

NOTES:

1. DIMENSIONS LISTED ON THIS SHEET TO BE USED IN CONJUNCTION WITH SHEET TRRCB G2-12.
2. DIMENSIONS "A", "B", "C", "D", "E", AND "SP." LISTED IN THE BAR LIST ARE IN INCHES.

VARIABLE DIMENSIONS AND QUANTITIES FOR TRIPLE 12 x 6 BARREL SECTIONS

DIMENSIONS

FILL	S	H	A	B	C	D	E	R	T	U	W	X	Z
0	12	6	14	11.5	9	9	9	0'-4	0'-0	7'-8	2'-9	4'-4	4'-3
1	12	6	13.5	11	9	9	9	0'-8	0'-4	7'-2	2'-8	4'-9	4'-3
2	12	6	10	10	9	9	9	2'-5	1'-8	5'-8	3'-5	5'-4	4'-1
3-6	12	6	10	10.5	9	9	9	2'-5	2'-0	5'-1	3'-3	4'-5	4'-2
7-8	12	6	10	11.5	9	9	9	4'-1	2'-11	4'-0	3'-1	4'-4	3'-11
9-10	12	6	11	13	9	9	9	3'-11	2'-8	3'-10	2'-10	4'-9	3'-9
11-12	12	6	12	14	9	9	9	4'-2	2'-7	3'-10	2'-8	4'-9	3'-9
13-15	12	6	13.5	15.5	9	6	9	4'-0	2'-2	3'-10	2'-2	4'-4	3'-10
16-17	12	6	14.5	16.5	9	6	9	3'-11	2'-0	3'-10	2'-1	4'-3	3'-10
18-19	12	6	15.5	18	9	9	9	3'-10	1'-7	3'-11	1'-7	4'-6	3'-11
20-21	12	6	17	19	9	9	9	3'-11	1'-5	4'-0	1'-7	4'-10	4'-0
22-23	12	6	18	20	9	9	9	4'-2	1'-1	4'-0	1'-1	4'-8	4'-1
24-25	12	6	19.5	21.5	9.5	9	6	4'-2	0'-11	4'-2	1'-0	4'-7	4'-2

BAR LIST

FILL	a1 SIZE	a1 SP.	a1 L	a2 SIZE	a2 SP.	a2 L	b1 SIZE	b1 SP.	b1 NO.	b2 SIZE	b2 SP.	b2 NO.	e1 SIZE	e1 SP.	e1 NO.	e2 SIZE	e2 SP.	e2 NO.	f1 SIZE	f1 SP.	f1 NO.	f2 SIZE	f2 SP.	f2 NO.	k1 SIZE	k1 SP.	k1 L	k2 SIZE	k2 SP.	k2 L	k3 SIZE	k3 SP.	k3 L	k4 SIZE	k4 SP.	k4 L	k4 H	k4 V	k6 SIZE	k6 SP.	k6 L	k7 SIZE	k7 SP.	k7 L
0	4	12	8'-0	6	9	8'-0	4	6	24	4	6	26	4	12	33	4	17	30	4	12	39	4	17	30	5	12	38'-8	5	12	12'-11	5	12	12'-1	5	9	7'-2	3'-7	3'-7	5	18	38'-8	7	18	15'-4
1	4	12	7'-11	6	9	7'-11	4	6	24	4	6	26	4	12	33	4	17	30	4	12	39	4	17	30	5	12	38'-8	5	12	11'-5	5	12	11'-5	6	12	7'-4	3'-8	3'-8	5	18	38'-8	7	18	14'-10
2	4	9	7'-7	7	9	7'-7	4	6	24	4	6	26	4	12	33	4	17	30	4	12	39	4	17	30	6	12	38'-8	5	12	10'-5	4	12	7'-11	6	9	6'-10	3'-5	3'-5	5	12	38'-8	6	12	13'-1
3-6	4	9	7'-7	7	9	7'-7	4	6	24	4	6	26	4	12	33	4	17	30	4	12	39	4	17	30	6	12	38'-8	5	12	10'-0	4	12	7'-11	6	9	6'-10	3'-5	3'-5	5	12	38'-8	6	12	11'-8
7-8	4	12	7'-8	6	9	7'-8	4	6	24	4	6	26	4	12	33	4	17	30	4	12	39	4	17	30	5	9	38'-8	4	9	8'-4	4	9	4'-7	5	6	6'-0	3'-0	3'-0	4	9	38'-8	6	9	8'-4
9-10	4	12	7'-11	6	9	7'-11	4	6	24	4	6	26	4	12	33	4	17	30	4	12	39	4	17	30	5	9	38'-8	4	9	8'-10	4	9	4'-11	5	6	5'-9	2'-8	3'-1	5	9	38'-8	6	9	8'-1
11-12	4	12	8'-1	6	9	8'-1	4	6	24	4	6	26	4	12	33	4	17	30	4	12	39	4	17	30	6	12	38'-8	5	12	9'-4	4	12	4'-5	5	6	5'-9	2'-7	3'-2	5	9	38'-8	6	9	8'-1
13-15	4	6	8'-4	6	9	8'-4	4	6	24	4	6	26	4	12	33	4	17	30	4	12	39	4	17	30	5	9	38'-8	5	9	10'-6	4	9	4'-9	4	6	5'-9	2'-6	3'-3	5	9	38'-8	6	9	8'-3
16-17	4	6	8'-6	6	9	8'-6	4	6	24	4	6	26	4	12	33	4	17	30	4	12	39	4	17	30	5	9	38'-8	5	9	10'-10	4	9	4'-11	4	6	5'-10	2'-6	3'-4	5	9	38'-8	6	9	8'-3
18-19	5	12	8'-8	6	9	8'-8	4	6	24	4	6	26	4	12	33	4	17	30	4	12	39	4	17	30	5	9	38'-8	5	9	11'-4	4	9	5'-1	4	6	6'-1	2'-7	3'-6	5	9	38'-8	6	9	8'-5
20-21	4	9	8'-11	6	9	8'-11	4	6	24	4	6	26	4	12	33	4	17	30	4	12	39	4	17	30	5	9	38'-8	5	9	11'-6	4	9	4'-11	4	6	6'-3	2'-8	3'-7	5	9	38'-8	6	9	8'-8
22-23	4	9	9'-1	6	9	9'-1	4	6	24	4	6	26	4	12	33	4	17	30	4	12	39	4	17	30	6	12	38'-8	6	12	11'-10	4	12	4'-5	4	6	6'-4	2'-8	3'-8	5	9	38'-8	6	9	8'-9
24-25	4	9	9'-4	5	6	9'-4	4	6	24	4	6	26	4	12	33	4	17	30	5	12	39	4	17	30	6	12	38'-10	6	12	12'-1	4	12	4'-6	4	6	6'-7	2'-10	3'-9	5	9	38'-10	6	9	9'-0

BAR LIST

FILL	k9 SIZE	k9 SP.	k9 L	m1 SIZE	m1 SP.	m1 L	m2 SIZE	m2 SP.	m2 L	m3 SIZE	m3 SP.	m3 L	m4 SIZE	m4 SP.	m4 L	m4 H	m4 V	m6 SIZE	m6 SP.	m6 L	m7 SIZE	m7 SP.	m7 L	m9 SIZE	m9 SP.	m9 L
0	7	4.5	38'-8	4	9	39'-2	4	9	8'-8	4	9	4'-1	6	9	11'-1	4'-8	6'-5	4	12	39'-2	6	12	8'-7	6	4.5	39'-2
1	7	4.5	38'-8	5	12	39'-2	5	12	8'-8	4	12	3'-3	7	12	10'-10	4'-6	6'-4	4	9	39'-2	5	9	8'-6	5	4.5	39'-2
2	6	4.5	38'-8	5	9	39'-2	4	9	7'-2	4	9	2'-1	6	9	9'-9	3'-6	6'-3	5	9	39'-2	5	9	8'-4	5	4.5	39'-2
3-6	6	4.5	38'-8	6	12	39'-2	5	12	7'-6	4	12	3'-11	6	9	9'-9	3'-5	6'-4	5	12	39'-2	7	12	8'-6	7	4.5	39'-2
7-8	6	4.5	38'-8	6	12	39'-2	5	12	8'-0	4	12	4'-1	5	6	9'-5	3'-0	6'-5	5	12	39'-2	7	12	8'-1	7	4.5	39'-2
9-10	6	4.5	38'-8	6	12	39'-2	5	12	8'-8	4	12	3'-3	5	6	9'-2	2'-8	6'-6	4	9	39'-2	6	9	7'-10	6	4.5	39'-2
11-12	6	4.5	38'-8	6	12	39'-2	5	12	9'-3	4	12	3'-3	5	6	9'-2	2'-7	6'-7	5	12	39'-2	7	12	8'-0	7	4.5	39'-2
13-15	6	4.5	38'-8	5	9	39'-2	5	9	10'-6	4	9	4'-1	4	6	9'-4	2'-7	6'-9	5	12	39'-2	7	12	8'-2	7	4.5	39'-2
16-17	6	4.5	38'-8	5	9	39'-2	5	9	10'-10	4	9	4'-3	4	6	9'-5	2'-7	6'-10	5	9	39'-2	6	9	8'-4	6	4.5	39'-2
18-19	6	4.5	38'-8	5	9	39'-2	5	9	11'-5	4	9	3'-9	4	6	9'-6	2'-7	6'-11	5	12	39'-2	7	12	8'-6	7	4.5	39'-2
20-21	6	4.5	38'-8	6	12	39'-2	6	12	11'-5	4	12	3'-1	4	6	9'-8	2'-8	7'-0	5	9	39'-2	6	9	8'-9	6	4.5	39'-2
22-23	6	4.5	38'-8	6	12	39'-2	6	12	11'-11	4	12	3'-5	4	6	9'-10	2'-9	7'-1	5	9	39'-2	6	9	8'-11	6	4.5	39'-2
24-25	6	4.5	38'-10	6	12	39'-4	6	12	12'-1	4	12	3'-8	4	6	10'-1	2'-10	7'-3	5	9	39'-4	6	9	9'-1	6	4.5	39'-4

QUANTITIES

FILL	CONCRETE (CY/FT) SLAB	FLOOR	WALLS	TOTAL	STEEL (LB/FT)
0	1.766	1.483	0.618	3.867	497.11
1	1.706	1.422	0.618	3.746	511.32
2	1.285	1.301	0.618	3.204	565.79
3-6	1.285	1.362	0.618	3.265	573.05
7-8	1.285	1.483	0.618	3.386	533.68
9-10	1.405	1.666	0.618	3.689	542.71
11-12	1.526	1.788	0.618	3.932	562.87
13-15	1.706	1.971	0.618	4.295	562.42
16-17	1.827	2.093	0.618	4.538	576.74
18-19	1.947	2.276	0.618	4.841	567.95
20-21	2.127	2.398	0.618	5.143	587.21
22-23	2.248	2.520	0.618	5.386	599.92
24-25	2.441	2.716	0.652	5.809	622.50

LATEST REVISION DATE

APPROVED BY BRIDGE ENGINEER

IOWA DOT Highway Division

STANDARD DESIGN

TRIPLE REINFORCED CONCRETE BOX CULVERTS

APRIL, 2012

CULVERT BARREL DETAILS

12 x 6 BARREL SECTIONS

TRRCB 12-6-12

ENGLISHLRFDSIGNEDTRIPLECULVERTS.DGN - TRRCB 12-6-12 - THIS SHEET ISSUED 04-12.

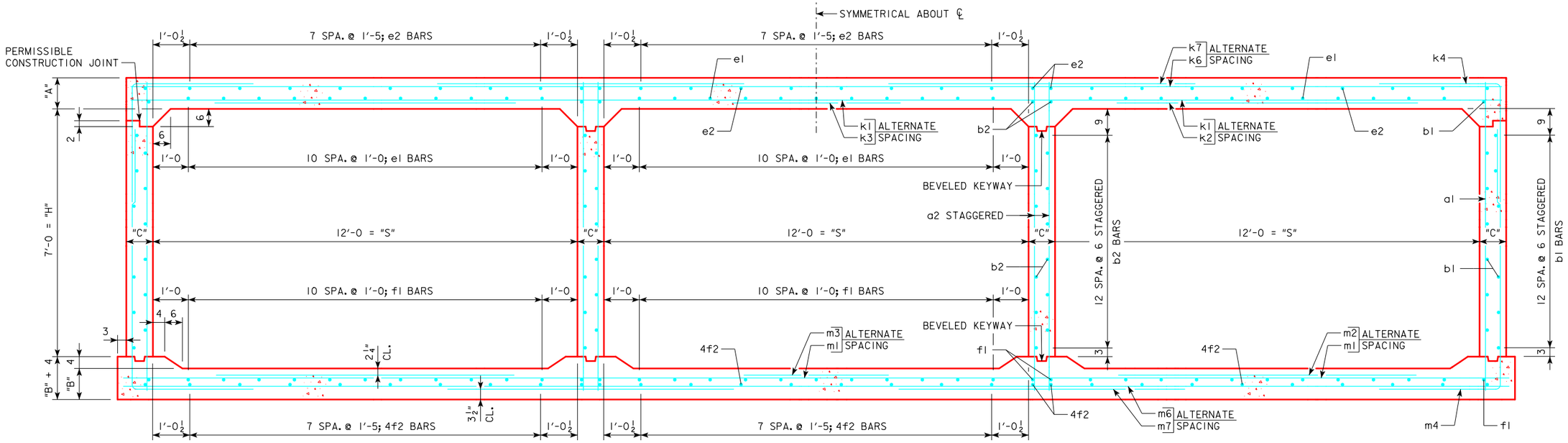

TRIPLE 12 x 7 BARREL SECTION

NOTES:

1. DIMENSIONS LISTED ON THIS SHEET TO BE USED IN CONJUNCTION WITH SHEET TRRCB G2-12.
2. DIMENSIONS "A", "B", "C", "D", "E", AND "SP." LISTED IN THE BAR LIST ARE IN INCHES.

LATEST REVISION DATE

APPROVED BY BRIDGE ENGINEER

IOWA DOT Highway Division

STANDARD DESIGN

TRIPLE REINFORCED CONCRETE BOX CULVERTS

APRIL, 2012

CULVERT BARREL DETAILS

12 x 7 BARREL SECTIONS

TRRCB 12-7-12

SHEET 1 OF 2

ENGLISHLRFDSIGNEDTRIPLECULVERTS.DGN - TRRCB 12-7s1-12 - THIS SHEET ISSUED 04-12.

VARIABLE DIMENSIONS AND QUANTITIES FOR TRIPLE 12 x 7 BARREL SECTIONS

DIMENSIONS													
FILL	S	H	A	B	C	D	E	R	T	U	W	X	Z
0	12	7	14	11.5	9	9	9	0'-3	0'-0	7'-8	2'-6	4'-9	4'-3
1	12	7	13.5	11	9	9	9	0'-9	0'-2	7'-8	2'-8	4'-7	4'-3
2	12	7	10	10	9	9	9	2'-5	1'-8	6'-1	3'-5	5'-4	4'-1
3-6	12	7	10.5	10.5	9	9	9	2'-8	1'-11	5'-6	3'-2	4'-5	4'-0
7-8	12	7	10.5	11.5	9	9	9	4'-0	2'-11	4'-1	3'-0	4'-4	3'-11
9-10	12	7	11	13	9	9	9	4'-1	2'-7	4'-0	2'-9	4'-8	3'-9
11-12	12	7	12	14	9	9	9	4'-1	2'-6	3'-11	2'-7	4'-8	3'-9
13-15	12	7	13.5	15.5	9	9	9	3'-10	1'-11	3'-10	2'-2	4'-3	3'-10
16-17	12	7	15	17	9	6	9	3'-10	1'-7	3'-11	2'-0	4'-5	3'-11
18-19	12	7	16	18	9	6	9	3'-9	1'-6	3'-11	1'-7	4'-4	3'-11
20-21	12	7	17	19	9	6	9	3'-10	1'-5	4'-0	1'-7	4'-7	4'-0
22-23	12	7	18	20	9	6	9	4'-0	1'-1	4'-0	1'-1	4'-6	4'-1
24-25	12	7	19.5	21.5	9	9	9	4'-0	0'-11	4'-1	1'-0	4'-6	4'-2

BAR LIST																																															
	a1			a2			b1			b2			e1			e2			f1			f2			k1			k2			k3			k4						k6			k7		
FILL	SIZE	SP.	L	SIZE	SP.	L	SIZE	SP.	NO.	SIZE	SP.	NO.	SIZE	SP.	NO.	SIZE	SP.	NO.	SIZE	SP.	NO.	SIZE	SP.	NO.	SIZE	SP.	L	SIZE	SP.	L	SIZE	SP.	L	SIZE	SP.	L	H	V	SIZE	SP.	L	SIZE	SP.	L
0	4	12	9'-0	6	9	9'-0	4	6	28	4	6	30	4	12	33	4	17	30	4	12	39	4	17	30	5	12	38'-8	5	12	12'-11	5	12	12'-3	5	9	7'-7	4'-3	3'-4	5	18	38'-8	7	18	15'-4
1	4	12	8'-11	6	9	8'-11	4	6	28	4	6	30	4	12	33	4	17	30	4	12	39	4	17	30	6	18	38'-8	6	18	12'-9	6	18	11'-3	6	12	8'-0	4'-4	3'-8	5	18	38'-8	7	18	15'-4
2	4	9	8'-7	7	9	8'-7	4	6	28	4	6	30	4	12	33	4	17	30	4	12	39	4	17	30	6	12	38'-8	5	12	10'-8	4	12	7'-11	6	9	7'-2	3'-7	3'-7	5	18	38'-8	8	18	14'-2
3-6	5	12	8'-8	6	9	8'-8	4	6	28	4	6	30	4	12	33	4	17	30	4	12	39	4	17	30	6	12	38'-8	5	12	10'-3	4	12	7'-5	6	9	6'-10	3'-5	3'-5	5	12	38'-8	6	12	13'-7
7-8	4	12	8'-9	6	9	8'-9	4	6	28	4	6	30	4	12	33	4	17	30	4	12	39	4	17	30	5	9	38'-8	4	9	8'-6	4	9	4'-9	5	6	6'-0	3'-0	3'-0	4	12	38'-8	7	12	8'-8
9-10	4	12	8'-11	6	9	8'-11	4	6	28	4	6	30	4	12	33	4	17	30	4	12	39	4	17	30	6	12	38'-8	5	12	8'-11	4	12	4'-7	5	6	6'-2	3'-1	3'-1	5	12	38'-8	7	12	8'-5
11-12	4	12	9'-1	6	9	9'-1	4	6	28	4	6	30	4	12	33	4	17	30	4	12	39	4	17	30	6	12	38'-8	5	12	9'-5	4	12	4'-7	5	6	5'-11	2'-9	3'-2	5	12	38'-8	7	12	8'-3
13-15	4	12	9'-4	6	9	9'-4	4	6	28	4	6	30	4	12	33	4	17	30	4	12	39	4	17	30	7	18	38'-8	7	18	11'-0	4	18	5'-1	5	6	6'-0	2'-9	3'-3	5	9	38'-8	6	9	8'-3
16-17	4	6	9'-7	6	9	9'-7	4	6	28	4	6	30	4	12	33	4	17	30	4	12	39	4	17	30	7	18	38'-8	7	18	11'-4	4	18	5'-1	4	6	6'-2	2'-9	3'-5	5	12	38'-8	7	12	8'-5
18-19	4	6	9'-9	6	9	9'-9	4	6	28	4	6	30	4	12	33	4	17	30	4	12	39	4	17	30	7	18	38'-8	7	18	11'-5	4	18	5'-3	4	6	6'-3	2'-9	3'-6	5	12	38'-8	7	12	8'-6
20-21	4	6	9'-11	6	9	9'-11	4	6	28	4	6	30	4	12	33	4	17	30	4	12	39	4	17	30	5	9	38'-8	5	9	11'-6	4	9	5'-1	4	6	6'-5	2'-10	3'-7	5	9	38'-8	6	9	8'-8
22-23	4	6	10'-1	6	9	10'-1	4	6	28	4	6	30	4	12	33	4	17	30	4	12	39	4	17	30	6	12	38'-8	6	12	11'-10	4	12	4'-9	4	6	6'-6	2'-10	3'-8	5	9	38'-8	6	9	8'-9
24-25	5	12	10'-4	6	9	10'-4	4	6	28	4	6	30	4	12	33	4	17	30	5	12	39	4	17	30	6	12	38'-8	6	12	12'-0	4	12	4'-9	4	6	6'-8	2'-11	3'-9	5	9	38'-8	6	9	8'-11

BAR LIST																																				QUANTITIES				
	k9			m1			m2			m3			m4					m6			m7			m9			CONCRETE (CY/FT)				STEEL
FILL	SIZE	SP.	L	SIZE	SP.	L	SIZE	SP.	L	SIZE	SP.	L	SIZE	SP.	L	H	V	SIZE	SP.	L	SIZE	SP.	L	SIZE	SP.	L	SLAB	FLOOR	WALLS	TOTAL	(LB/FT)
0	7	4.5	38'-8	6	18	39'-2	6	18	9'-3	4	18	3'-3	6	9	12'-8	5'-3	7'-5	4	9	39'-2	5	9	8'-7	5	4.5	39'-2	1.766	1.483	0.729	3.978	529.61
1	7	4.5	38'-8	5	12	39'-2	5	12	8'-9	4	12	3'-7	7	12	12'-3	4'-11	7'-4	4	9	39'-2	5	9	8'-6	5	4.5	39'-2	1.706	1.422	0.729	3.857	531.61
2	8	4.5	38'-8	6	12	39'-2	5	12	7'-0	4	12	2'-1	6	9	11'-0	3'-9	7'-3	4	9	39'-2	6	9	8'-4	6	4.5	39'-2	1.285	1.301	0.729	3.315	588.53
3-6	6	4.5	38'-8	6	12	39'-2	5	12	7'-6	4	12	3'-11	6	9	10'-10	3'-6	7'-4	5	9	39'-2	6	9	8'-2	6	4.5	39'-2	1.345	1.362	0.729	3.436	595.61
7-8	7	4.5	38'-8	6	12	39'-2	5	12	8'-5	4	12	4'-1	5	6	10'-6	3'-1	7'-5	5	12	39'-2	7	12	8'-1	7	4.5	39'-2	1.345	1.483	0.729	3.557	546.66
9-10	7	4.5	38'-8	6	12	39'-2	5	12	8'-9	4	12	3'-5	5	6	10'-4	2'-10	7'-6	4	9	39'-2	6	9	7'-10	6	4.5	39'-2	1.405	1.666	0.729	3.800	559.71
11-12	7	4.5	38'-8	6	12	39'-2	5	12	9'-5	4	12	3'-5	5	6	10'-4	2'-9	7'-7	5	12	39'-2	7	12	8'-0	7	4.5	39'-2	1.526	1.788	0.729	4.043	570.66
13-15	6	4.5	38'-8	5	9	39'-2	5	9	10'-6	4	9	4'-3	5	6	10'-6	2'-9	7'-9	5	12	39'-2	7	12	8'-2	7	4.5	39'-2	1.706	1.971	0.729	4.406	594.29
16-17	7	4.5	38'-8	5	9	39'-2	5	9	11'-0	4	9	3'-11	4	6	10'-8	2'-10	7'-10	5	12	39'-2	7	12	8'-5	7	4.5	39'-2	1.887	2.154	0.729	4.770	577.55
18-19	7	4.5	38'-8	5	9	39'-2	5	9	11'-5	4	9	4'-1	4	6	10'-9	2'-10	7'-11	5	12	39'-2	7	12	8'-6	7	4.5	39'-2	2.007	2.276	0.729	5.012	581.32
20-21	6	4.5	38'-8	6	12	39'-2	6	12	11'-5	4	12	3'-7	4	6	10'-10	2'-10	8'-0	5	9	39'-2	6	9	8'-8	6	4.5	39'-2	2.127	2.398	0.729	5.254	610.79
22-23	6	4.5	38'-8	6	12	39'-2	6	12	11'-11	4	12	3'-9	4	6	11'-0	2'-11	8'-1	5	9	39'-2	6	9	8'-11	6	4.5	39'-2	2.248	2.520	0.729	5.497	623.95
24-25	6	4.5	38'-8	6	12	39'-2	6	12	12'-0	4	12	3'-9	4	6	11'-3	3'-0	8'-3	5	9	39'-2	6	9	9'-1	6	4.5	39'-2	2.428	2.703	0.729	5.860	637.71

BENT BAR DETAIL

BARS	D
4	3
5	$3\frac{3}{4}$
6	$4\frac{1}{2}$
7	$5\frac{1}{4}$

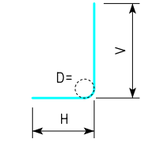

k4 & m4

NOTE:
ALL DIMENSIONS ARE OUT TO OUT.
D = PIN DIAMETER.

NOTES:

1. DIMENSIONS LISTED ON THIS SHEET TO BE USED IN CONJUNCTION WITH SHEET TRRCB G2-12.
2. DIMENSIONS "A", "B", "C", "D", "E", AND "SP." LISTED IN THE BAR LIST ARE IN INCHES.

LATEST REVISION DATE

APPROVED BY BRIDGE ENGINEER

IOWA DOT Highway Division

STANDARD DESIGN

TRIPLE REINFORCED CONCRETE BOX CULVERTS

APRIL, 2012

CULVERT BARREL DETAILS

12 x 7 BARREL SECTIONS

TRRCB 12-7-12

SHEET 2 OF 2

ENGLISHLRFDSIGNEDTRIPLECULVERTS.DGN - TRRCB 12-7s2-12 - THIS SHEET ISSUED 04-12.

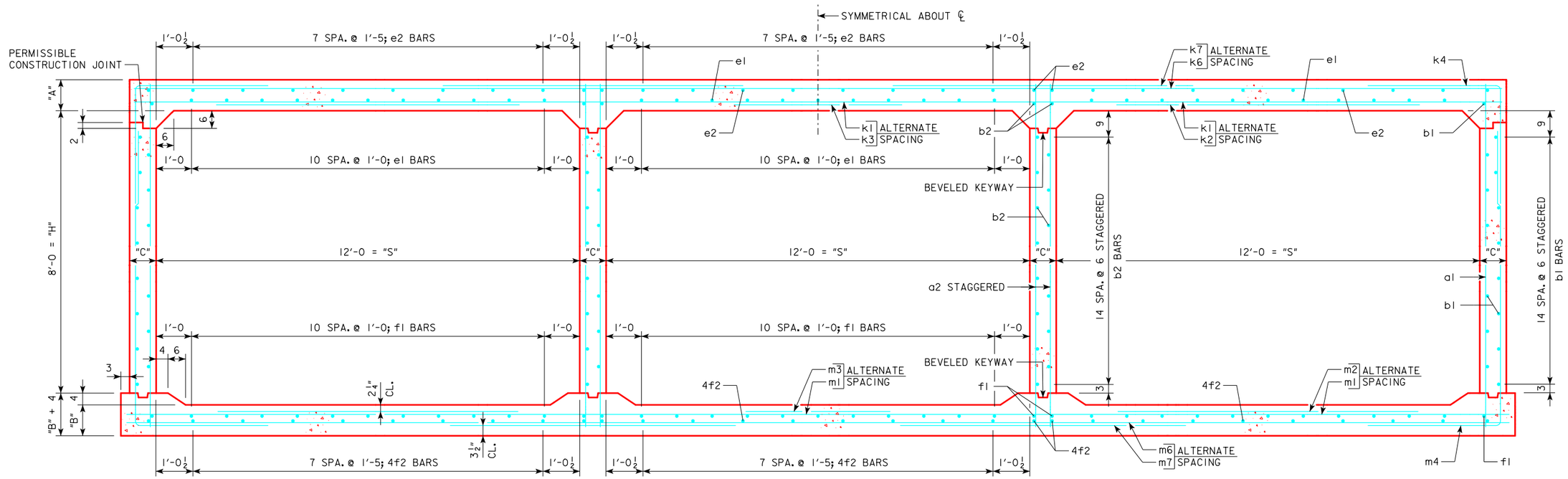

TRIPLE 12 x 8 BARREL SECTION

NOTES:

1. DIMENSIONS LISTED ON THIS SHEET TO BE USED IN CONJUNCTION WITH SHEET TRRCB G2-12.
2. DIMENSIONS "A", "B", "C", "D", "E", AND "SP." LISTED IN THE BAR LIST ARE IN INCHES.

LATEST REVISION DATE

APPROVED BY BRIDGE ENGINEER

IOWA DOT Highway Division

STANDARD DESIGN

TRIPLE REINFORCED CONCRETE BOX CULVERTS

APRIL, 2012

CULVERT BARREL DETAILS

12 x 8 BARREL SECTIONS

TRRCB 12-8-12

SHEET 1 OF 2

ENGLISHLRFDSIGNEDTRIPLECULVERTS.DGN - TRRCB 12-8s1-12 - THIS SHEET ISSUED 04-12.

VARIABLE DIMENSIONS AND QUANTITIES FOR TRIPLE 12 x 8 BARREL SECTIONS

DIMENSIONS													
FILL	S	H	A	B	C	D	E	R	T	U	W	X	Z
0	12	8	14.5	11.5	9	9	9	0'-3	0'-0	7'-8	2'-8	5'-4	4'-3
1	12	8	13.5	11.5	9	9	9	0'-8	0'-2	7'-8	2'-8	5'-4	4'-3
2	12	8	10.5	10	9	9	9	2'-4	1'-7	6'-1	3'-4	4'-5	4'-2
3-6	12	8	10.5	10.5	9	9	9	2'-0	1'-4	5'-8	3'-0	4'-4	4'-0
7-8	12	8	10.5	11.5	9	9	9	4'-0	2'-10	4'-0	2'-11	4'-4	3'-11
9-10	12	8	11	13	9	9	9	4'-1	2'-9	4'-0	2'-8	4'-6	3'-10
11-12	12	8	12	14	9	9	9	4'-1	2'-8	3'-11	2'-6	4'-2	3'-9
13-15	12	8	14	16	9	9	9	4'-2	2'-2	3'-11	2'-2	4'-5	3'-10
16-17	12	8	15	17	9	9	9	3'-10	1'-7	3'-11	2'-0	4'-3	3'-11
18-19	12	8	16	18	9	9	9	3'-9	1'-6	3'-11	1'-7	4'-1	3'-11
20-21	12	8	17	19	9.5	9	6	3'-9	1'-5	4'-0	1'-7	4'-3	4'-0
22-23	12	8	18	20	10	6	9	3'-7	1'-0	4'-1	1'-2	4'-0	4'-1
24-25	12	8	19	21.5	10	6	9	3'-7	1'-0	4'-1	1'-0	4'-1	4'-3

BAR LIST																																															
	a1			a2			b1			b2			e1			e2			f1			f2			k1			k2			k3			k4					k6			k7		
FILL	SIZE	SP.	L	SIZE	SP.	L	SIZE	SP.	NO.	SIZE	SP.	NO.	SIZE	SP.	NO.	SIZE	SP.	NO.	SIZE	SP.	NO.	SIZE	SP.	NO.	SIZE	SP.	L	SIZE	SP.	L	SIZE	SP.	L	SIZE	SP.	L	H	V	SIZE	SP.	L	SIZE	SP.	L
0	4	12	10'-1	6	9	10'-1	4	6	32	4	6	34	4	12	33	5	17	30	4	12	39	4	17	30	5	12	38'-8	5	12	12'-11	5	12	12'-3	5	9	10'-4	7'-0	3'-4	5	18	38'-8	7	18	15'-4
1	4	12	10'-0	6	9	10'-0	4	6	32	4	6	34	4	12	33	4	17	30	4	12	39	4	17	30	6	18	38'-8	6	18	12'-9	6	18	11'-5	6	12	9'-4	5'-9	3'-7	5	18	38'-8	7	18	15'-4
2	4	9	9'-7	6	9	9'-7	4	6	32	4	6	34	4	12	33	4	17	30	4	12	39	4	17	30	6	12	38'-8	5	12	10'-11	4	12	8'-1	6	9	7'-7	4'-2	3'-5	4	9	38'-8	5	9	13'-7
3-6	5	12	9'-8	6	9	9'-8	4	6	32	4	6	34	4	12	33	4	17	30	4	12	39	4	17	30	7	18	38'-8	7	18	11'-5	5	18	8'-9	6	9	7'-2	3'-9	3'-5	5	12	38'-8	6	12	13'-9
7-8	4	9	9'-9	6	9	9'-9	4	6	32	4	6	34	4	12	33	4	17	30	4	12	39	4	17	30	5	9	38'-8	4	9	8'-7	4	9	4'-9	6	9	6'-8	3'-4	3'-4	5	9	38'-8	5	9	8'-6
9-10	4	12	9'-11	6	9	9'-11	4	6	32	4	6	34	4	12	33	4	17	30	4	12	39	4	17	30	6	12	38'-8	5	12	8'-9	4	12	4'-7	5	6	6'-2	3'-1	3'-1	5	12	38'-8	7	12	8'-5
11-12	4	12	10'-1	6	9	10'-1	4	6	32	4	6	34	4	12	33	4	17	30	4	12	39	4	17	30	6	12	38'-8	5	12	9'-3	4	12	4'-7	5	6	6'-4	3'-2	3'-2	5	12	38'-8	7	12	8'-4
13-15	4	12	10'-5	6	9	10'-5	4	6	32	4	6	34	4	12	33	4	17	30	4	12	39	4	17	30	6	12	38'-8	5	12	10'-2	4	12	4'-5	5	6	6'-4	3'-0	3'-4	5	12	38'-8	7	12	8'-5
16-17	4	12	10'-7	6	9	10'-7	4	6	32	4	6	34	4	12	33	4	17	30	4	12	39	4	17	30	7	18	38'-8	7	18	11'-4	4	18	5'-1	5	6	6'-5	3'-0	3'-5	5	12	38'-8	7	12	8'-5
18-19	4	12	10'-9	6	9	10'-9	4	6	32	4	6	34	4	12	33	4	17	30	4	12	39	4	17	30	7	18	38'-8	7	18	11'-5	4	18	5'-3	5	6	6'-6	3'-0	3'-6	5	12	38'-8	7	12	8'-6
20-21	4	12	10'-11	5	6	10'-11	4	6	32	4	6	34	4	12	33	4	17	30	4	12	39	4	17	30	5	9	38'-10	5	9	11'-7	4	9	5'-4	6	9	7'-0	3'-1	3'-11	5	9	38'-10	6	9	8'-8
22-23	4	6	11'-1	7	9	11'-1	4	6	32	4	6	34	4	12	33	4	17	30	4	12	39	4	17	30	5	9	39'-0	5	9	12'-1	4	9	5'-8	6	12	7'-2	3'-2	4'-0	5	9	39'-0	6	9	8'-10
24-25	4	6	11'-3	7	9	11'-3	4	6	32	4	6	34	4	12	33	4	17	30	5	12	39	4	17	30	6	12	39'-0	6	12	12'-1	4	12	5'-8	6	12	7'-4	3'-3	4'-1	5	9	39'-0	6	9	8'-11

BAR LIST																																															
	k9			m1			m2			m3			m4					m6			m7			m9			QUANTITIES				
																											CONCRETE (CY/FT)				STEEL
FILL	SIZE	SP.	L	SIZE	SP.	L	SIZE	SP.	L	SIZE	SP.	L	SIZE	SP.	L	H	V	SIZE	SP.	L	SIZE	SP.	L	SIZE	SP.	L	SLAB	FLOOR	WALLS	TOTAL	(LB/FT)
0	7	4.5	38'-8	5	12	39'-2	5	12	8'-11	4	12	2'-1	6	9	14'-1	5'-8	8'-5	4	9	39'-2	5	9	8'-7	5	4.5	39'-2	1.827	1.483	0.840	4.150	565.00
1	7	4.5	38'-8	5	12	39'-2	5	12	8'-11	4	12	2'-1	7	12	14'-1	5'-8	8'-5	4	12	39'-2	6	12	8'-8	6	4.5	39'-2	1.706	1.483	0.840	4.029	550.58
2	5	4.5	38'-8	6	12	39'-2	5	12	7'-4	4	12	3'-11	6	9	12'-5	4'-2	8'-3	5	12	39'-2	7	12	8'-6	7	4.5	39'-2	1.345	1.301	0.840	3.486	594.92
3-6	6	4.5	38'-8	5	9	39'-2	5	9	8'-1	4	9	4'-1	6	9	12'-0	3'-8	8'-4	5	9	39'-2	6	9	8'-2	6	4.5	39'-2	1.345	1.362	0.840	3.547	622.68
7-8	5	4.5	38'-8	6	12	39'-2	5	12	8'-6	4	12	4'-1	6	9	11'-8	3'-3	8'-5	5	12	39'-2	7	12	8'-1	7	4.5	39'-2	1.345	1.483	0.840	3.668	580.34
9-10	7	4.5	38'-8	6	12	39'-2	5	12	9'-2	4	12	3'-9	5	6	11'-7	3'-1	8'-6	5	12	39'-2	7	12	8'-1	7	4.5	39'-2	1.405	1.666	0.840	3.911	586.18
11-12	7	4.5	38'-8	5	9	39'-2	5	9	9'-7	4	9	4'-5	5	6	11'-7	3'-0	8'-7	5	12	39'-2	7	12	8'-0	7	4.5	39'-2	1.526	1.788	0.840	4.154	590.11
13-15	7	4.5	38'-8	5	9	39'-2	5	9	10'-8	4	9	3'-11	5	6	11'-10	3'-1	8'-9	5	12	39'-2	7	12	8'-3	7	4.5	39'-2	1.766	2.032	0.840	4.638	598.39
16-17	7	4.5	38'-8	5	9	39'-2	5	9	11'-0	4	9	4'-3	5	6	11'-11	3'-1	8'-10	5	12	39'-2	7	12	8'-5	7	4.5	39'-2	1.887	2.154	0.840	4.881	607.95
18-19	7	4.5	38'-8	5	9	39'-2	5	9	11'-5	4	9	4'-7	5	6	12'-0	3'-1	8'-11	5	12	39'-2	7	12	8'-6	7	4.5	39'-2	2.007	2.276	0.840	5.123	611.87
20-21	6	4.5	38'-10	6	12	39'-4	6	12	11'-6	4	12	4'-4	6	9	12'-2	3'-2	9'-0	5	9	39'-4	6	9	8'-8	6	4.5	39'-4	2.139	2.410	0.887	5.436	645.89
22-23	6	4.5	39'-0	6	12	39'-6	6	12	11'-11	4	12	4'-10	6	12	12'-4	3'-3	9'-1	5	9	39'-6	6	9	8'-10	6	4.5	39'-6	2.272	2.544	0.934	5.750	664.08
24-25	6	4.5	39'-0	6	12	39'-6	6	12	12'-1	4	12	4'-8	6	12	12'-7	3'-4	9'-3	5	9	39'-6	6	9	9'-2	6	4.5	39'-6	2.393	2.729	0.934	6.056	691.03

BENT BAR DETAIL

BARS	D
5	$3\frac{3}{4}$
6	$4\frac{1}{2}$
7	$5\frac{1}{4}$

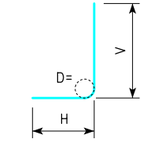

k4 & m4

NOTE:
ALL DIMENSIONS ARE OUT TO OUT.
D = PIN DIAMETER.

NOTES:

1. DIMENSIONS LISTED ON THIS SHEET TO BE USED IN CONJUNCTION WITH SHEET TRRCB G2-12.
2. DIMENSIONS "A", "B", "C", "D", "E", AND "SP." LISTED IN THE BAR LIST ARE IN INCHES.

LATEST REVISION DATE

APPROVED BY BRIDGE ENGINEER

IOWA DOT Highway Division

STANDARD DESIGN

TRIPLE REINFORCED CONCRETE BOX CULVERTS

APRIL, 2012

CULVERT BARREL DETAILS

12 x 8 BARREL SECTIONS

TRRCB 12-8-12

SHEET 2 OF 2

ENGLISHLRFDSIGNEDTRIPLECULVERTS.DGN - TRRCB 12-8s2-12 - THIS SHEET ISSUED 04-12.

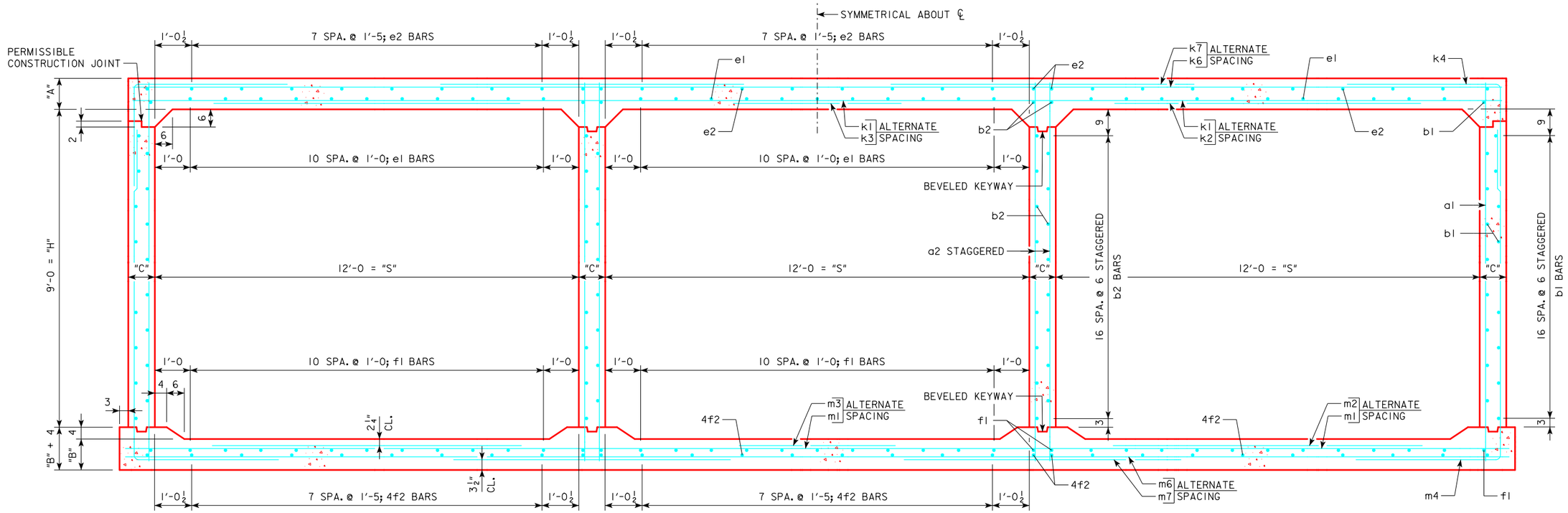

TRIPLE 12 x 9 BARREL SECTION

NOTES:

1. DIMENSIONS LISTED ON THIS SHEET TO BE USED IN CONJUNCTION WITH SHEET TRRCB G2-12.
2. DIMENSIONS "A", "B", "C", "D", "E", AND "SP." LISTED IN THE BAR LIST ARE IN INCHES.

LATEST REVISION DATE

APPROVED BY BRIDGE ENGINEER

IOWA DOT Highway Division

STANDARD DESIGN

TRIPLE REINFORCED CONCRETE BOX CULVERTS

APRIL, 2012

CULVERT BARREL DETAILS

12 x 9 BARREL SECTIONS

TRRCB 12-9-12

SHEET 1 OF 2

ENGLISHLRFDSIGNEDTRIPLECULVERTS.DGN - TRRCB 12-9s1-12 - THIS SHEET ISSUED 04-12.

VARIABLE DIMENSIONS AND QUANTITIES FOR TRIPLE 12 x 9 BARREL SECTIONS

DIMENSIONS													
FILL	S	H	A	B	C	D	E	R	T	U	W	X	Z
0	12	9	14.5	11.5	9	9	9	0'-2	0'-0	7'-8	2'-8	5'-0	4'-4
1	12	9	13.5	11.5	9	9	9	0'-7	0'-1	7'-8	2'-8	5'-1	4'-3
2	12	9	10.5	10	9	9	9	2'-4	1'-7	6'-6	3'-3	4'-5	4'-2
3-6	12	9	10.5	10.5	9	9	9	2'-0	1'-4	5'-10	3'-0	4'-4	4'-0
7-8	12	9	10.5	11.5	9	9	9	4'-0	2'-9	4'-0	2'-8	4'-2	3'-9
9-10	12	9	11	13	9	9	9	4'-1	2'-8	4'-0	2'-7	4'-4	3'-10
11-12	12	9	12	14	9	9	9	4'-0	2'-7	3'-11	2'-5	4'-1	3'-9
13-15	12	9	14	16	9	9	9	4'-1	2'-2	3'-11	2'-2	4'-1	3'-10
16-17	12	9	15	17	9.5	9	6	3'-8	1'-11	3'-11	2'-0	4'-0	3'-11
18-19	12	9	16	18	10	9	9	3'-7	1'-6	4'-0	1'-7	3'-10	4'-0
20-21	12	9	17	19	10.5	9	9	3'-6	1'-5	4'-0	1'-7	3'-10	4'-1
22-23	12	9	18	20	11	9	9	3'-6	1'-1	4'-1	1'-6	3'-9	4'-2
24-25	12	9	19	21.5	11.5	9	9	3'-6	1'-0	4'-2	1'-0	3'-8	4'-3

BAR LIST																																															
	a1			a2			b1			b2			e1			e2			f1			f2			k1			k2			k3			k4					k6			k7		
FILL	SIZE	SP.	L	SIZE	SP.	L	SIZE	SP.	NO.	SIZE	SP.	NO.	SIZE	SP.	NO.	SIZE	SP.	NO.	SIZE	SP.	NO.	SIZE	SP.	NO.	SIZE	SP.	L	SIZE	SP.	L	SIZE	SP.	L	SIZE	SP.	L	H	V	SIZE	SP.	L	SIZE	SP.	L
0	4	12	11'-1	6	9	11'-1	4	6	36	4	6	38	4	12	33	5	17	30	4	12	39	4	17	30	5	12	38'-8	5	12	12'-11	5	12	12'-5	5	9	10'-4	7'-0	3'-4	5	18	38'-8	7	18	15'-4
1	4	12	11'-0	6	9	11'-0	4	6	36	4	6	38	4	12	33	4	17	30	4	12	39	4	17	30	6	18	38'-8	6	18	12'-10	6	18	11'-7	6	12	10'-11	7'-4	3'-7	5	18	38'-8	7	18	15'-4
2	5	12	10'-7	6	9	10'-7	4	6	36	4	6	38	4	12	33	4	17	30	4	12	39	4	17	30	6	12	38'-8	5	12	10'-11	4	12	8'-1	6	9	8'-3	4'-10	3'-5	4	9	38'-8	5	9	14'-0
3-6	4	9	10'-8	6	9	10'-8	4	6	36	4	6	38	4	12	33	4	17	30	4	12	39	4	17	30	7	18	38'-8	7	18	11'-7	5	18	8'-9	5	6	7'-5	4'-4	3'-1	5	12	38'-8	6	12	13'-11
7-8	4	9	10'-9	6	9	10'-9	4	6	36	4	6	38	4	12	33	4	17	30	4	12	39	4	17	30	5	9	38'-8	4	9	8'-8	4	9	4'-9	6	9	6'-10	3'-5	3'-5	5	9	38'-8	5	9	8'-7
9-10	4	9	10'-11	6	9	10'-11	4	6	36	4	6	38	4	12	33	4	17	30	4	12	39	4	17	30	6	12	38'-8	5	12	8'-10	4	12	4'-7	6	9	6'-10	3'-5	3'-5	5	12	38'-8	7	12	8'-6
11-12	4	9	11'-1	6	9	11'-1	4	6	36	4	6	38	4	12	33	4	17	30	4	12	39	4	17	30	6	12	38'-8	5	12	9'-4	4	12	4'-9	6	9	7'-0	3'-6	3'-6	5	12	38'-8	7	12	8'-4
13-15	4	9	11'-5	6	9	11'-5	4	6	36	4	6	38	4	12	33	4	17	30	4	12	39	4	17	30	6	12	38'-8	5	12	10'-2	4	12	4'-7	6	9	7'-0	3'-4	3'-8	5	12	38'-8	7	12	8'-5
16-17	4	12	11'-7	5	6	11'-7	4	6	36	4	6	38	4	12	33	4	17	30	4	12	39	4	17	30	7	18	38'-10	7	18	11'-1	4	18	5'-6	5	6	6'-10	3'-5	3'-5	5	12	38'-10	7	12	8'-5
18-19	4	9	11'-9	7	9	11'-9	4	6	36	4	6	38	4	12	33	4	17	30	4	12	39	4	17	30	7	18	39'-0	7	18	11'-7	5	18	5'-8	6	9	7'-3	3'-5	3'-10	5	12	39'-0	7	12	8'-7
20-21	4	9	11'-11	7	9	11'-11	4	6	36	4	6	38	4	12	33	4	17	30	4	12	39	4	17	30	7	18	39'-2	7	18	11'-8	5	18	5'-10	5	6	7'-2	3'-7	3'-7	5	12	39'-2	7	12	8'-8
22-23	4	9	12'-1	7	9	12'-1	4	6	36	4	6	38	4	12	33	4	17	30	4	12	39	4	17	30	5	9	39'-4	5	9	12'-1	4	9	5'-11	6	9	7'-7	3'-7	4'-0	5	9	39'-4	6	9	8'-10
24-25	4	9	12'-3	7	9	12'-3	4	6	36	4	6	38	4	12	33	4	17	30	5	12	39	4	17	30	6	12	39'-6	6	12	12'-3	4	12	6'-0	5	6	7'-6	3'-9	3'-9	5	9	39'-6	6	9	8'-11

BAR LIST																																															
	k9			m1			m2			m3			m4					m6			m7			m9			QUANTITIES				
																											CONCRETE (CY/FT)				STEEL
FILL	SIZE	SP.	L	SIZE	SP.	L	SIZE	SP.	L	SIZE	SP.	L	SIZE	SP.	L	H	V	SIZE	SP.	L	SIZE	SP.	L	SIZE	SP.	L	SLAB	FLOOR	WALLS	TOTAL	(LB/FT)
0	7	4.5	38'-8	5	12	39'-2	5	12	9'-0	4	12	2'-9	6	9	15'-8	6'-3	9'-5	4	9	39'-2	5	9	8'-9	5	4.5	39'-2	1.827	1.483	0.952	4.262	583.53
1	7	4.5	38'-8	5	12	39'-2	5	12	9'-0	4	12	2'-7	7	12	15'-8	6'-3	9'-5	4	9	39'-2	5	9	8'-8	5	4.5	39'-2	1.706	1.483	0.952	4.141	578.76
2	5	4.5	38'-8	6	12	39'-2	5	12	7'-7	4	12	3'-11	6	9	13'-9	4'-6	9'-3	5	12	39'-2	7	12	8'-6	7	4.5	39'-2	1.345	1.301	0.952	3.598	619.68
3-6	6	4.5	38'-8	5	9	39'-2	5	9	8'-4	4	9	4'-1	5	6	13'-5	4'-1	9'-4	5	9	39'-2	6	9	8'-3	6	4.5	39'-2	1.345	1.362	0.952	3.659	640.08
7-8	5	4.5	38'-8	5	9	39'-2	5	9	8'-9	4	9	4'-5	6	9	12'-11	3'-6	9'-5	5	9	39'-2	6	9	7'-10	6	4.5	39'-2	1.345	1.483	0.952	3.780	607.82
9-10	7	4.5	38'-8	6	12	39'-2	5	12	9'-3	4	12	4'-1	6	9	12'-10	3'-4	9'-6	5	12	39'-2	7	12	8'-1	7	4.5	39'-2	1.405	1.666	0.952	4.023	609.71
11-12	7	4.5	38'-8	5	9	39'-2	5	9	9'-8	4	9	4'-7	6	9	12'-11	3'-4	9'-7	5	12	39'-2	7	12	8'-0	7	4.5	39'-2	1.526	1.788	0.952	4.266	613.79
13-15	7	4.5	38'-8	5	9	39'-2	5	9	10'-8	4	9	4'-7	6	9	13'-2	3'-5	9'-9	5	12	39'-2	7	12	8'-3	7	4.5	39'-2	1.766	2.032	0.952	4.750	622.26
16-17	7	4.5	38'-10	5	9	39'-4	5	9	11'-0	4	9	4'-10	5	6	13'-3	3'-5	9'-10	5	12	39'-4	7	12	8'-5	7	4.5	39'-4	1.897	2.165	1.004	5.066	628.71
18-19	7	4.5	39'-0	5	9	39'-6	5	9	11'-6	4	9	5'-2	6	9	13'-5	3'-6	9'-11	5	12	39'-6	7	12	8'-7	7	4.5	39'-6	2.029	2.299	1.057	5.385	658.21
20-21	7	4.5	39'-2	6	12	39'-8	6	12	11'-7	4	12	5'-2	5	6	13'-6	3'-6	10'-0	5	9	39'-8	6	9	8'-9	6	4.5	39'-8	2.162	2.430	1.113	5.705	680.63
22-23	6	4.5	39'-4	6	12	39'-10	6	12	11'-9	4	12	5'-5	6	9	13'-8	3'-7	10'-1	5	9	39'-10	6	9	8'-11	6	4.5	39'-10	2.296	2.566	1.166	6.028	695.18
24-25	6	4.5	39'-6	6	12	40'-0	6	12	12'-4	4	12	5'-8	5	6	14'-0	3'-9	10'-3	5	9	40'-0	6	9	9'-2	6	4.5	40'-0	2.431	2.765	1.218	6.414	725.24

BENT BAR DETAIL

BARS	D
5	$3\frac{3}{4}$
6	$4\frac{1}{2}$
7	$5\frac{1}{4}$

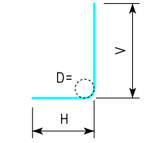

k4 & m4

NOTE:
ALL DIMENSIONS ARE OUT TO OUT.
D = PIN DIAMETER.

NOTES:

1. DIMENSIONS LISTED ON THIS SHEET TO BE USED IN CONJUNCTION WITH SHEET TRRCB G2-12.
2. DIMENSIONS "A", "B", "C", "D", "E", AND "SP." LISTED IN THE BAR LIST ARE IN INCHES.

LATEST REVISION DATE

APPROVED BY BRIDGE ENGINEER

IOWA DOT Highway Division

STANDARD DESIGN

TRIPLE REINFORCED CONCRETE BOX CULVERTS

APRIL, 2012

CULVERT BARREL DETAILS

12 x 9 BARREL SECTIONS

TRRCB 12-9-12

SHEET 2 OF 2

ENGLISHLRFDSIGNEDTRIPLECULVERTS.DGN - TRRCB 12-9s2-12 - THIS SHEET ISSUED 04-12.

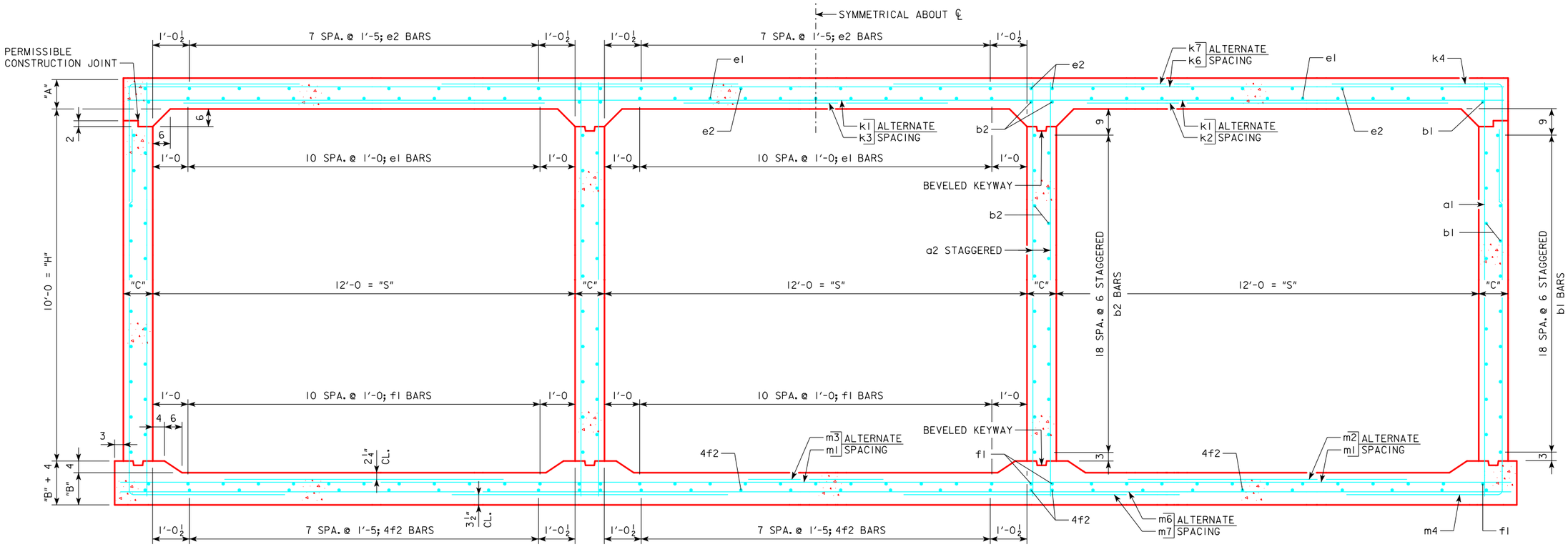

TRIPLE 12 x 10 BARREL SECTION

NOTES:

1. DIMENSIONS LISTED ON THIS SHEET TO BE USED IN CONJUNCTION WITH SHEET TRRCB G2-12.
2. DIMENSIONS "A", "B", "C", "D", "E", AND "SP." LISTED IN THE BAR LIST ARE IN INCHES.

LATEST REVISION DATE	APPROVED BY BRIDGE ENGINEER	IOWA DOT Highway Division
		STANDARD DESIGN TRIPLE REINFORCED CONCRETE BOX CULVERTS APRIL, 2012
		CULVERT BARREL DETAILS 12 x 10 BARREL SECTIONS — TRRCB 12-10-12 SHEET 1 OF 2

VARIABLE DIMENSIONS AND QUANTITIES FOR TRIPLE 12 x 10 BARREL SECTIONS

DIMENSIONS													
FILL	S	H	A	B	C	D	E	R	T	U	W	X	Z
0	12	10	14.5	11.5	10	9	9	0'-2	0'-0	7'-9	2'-8	4'-5	4'-3
1	12	10	13.5	11.5	10	9	9	0'-7	0'-2	7'-9	2'-8	4'-5	4'-3
2	12	10	10.5	10	10	9	9	2'-4	1'-11	6'-6	3'-3	4'-6	4'-3
3-6	12	10	10.5	11	10	9	9	2'-8	1'-11	5'-10	3'-1	4'-6	4'-2
7-8	12	10	10	11.5	10	6	9	4'-1	2'-10	4'-0	2'-11	4'-4	3'-10
9-10	12	10	11	13	10	9	9	4'-1	2'-9	4'-0	2'-8	4'-2	3'-11
11-12	12	10	12	14	10	6	9	3'-11	2'-8	3'-11	2'-6	3'-11	3'-10
13-15	12	10	13.5	16	10	6	9	3'-10	2'-3	3'-11	2'-2	4'-0	3'-11
16-17	12	10	14.5	17	10.5	6	9	3'-6	1'-11	3'-11	2'-1	3'-10	3'-11
18-19	12	10	15.5	18	11	9	9	3'-5	1'-7	4'-0	1'-8	3'-9	4'-0
20-21	12	10	16.5	19	11.5	9	9	3'-5	1'-6	4'-1	1'-7	3'-9	4'-1
22-23	12	10	17.5	20	12	9	9	3'-4	1'-5	4'-1	1'-6	3'-8	4'-2
24-25	12	10	19	21.5	12.5	6	9	3'-3	1'-0	4'-3	1'-1	3'-7	4'-4

BAR LIST	a1			a2			b1			b2			e1			e2			f1			f2			k1			k2			k3			k4					k6			k7		
FILL	SIZE	SP.	L	SIZE	SP.	L	SIZE	SP.	NO.	SIZE	SP.	NO.	SIZE	SP.	NO.	SIZE	SP.	NO.	SIZE	SP.	NO.	SIZE	SP.	NO.	SIZE	SP.	L	SIZE	SP.	L	SIZE	SP.	L	SIZE	SP.	L	H	V	SIZE	SP.	L	SIZE	SP.	L
0	4	9	12'-1	7	9	12'-1	4	6	40	4	6	42	4	12	33	5	17	30	4	12	39	4	17	30	5	12	39'-0	5	12	13'-1	5	12	12'-6	6	9	11'-1	7'-5	3'-8	5	18	39'-0	7	18	15'-6
1	4	9	12'-0	7	9	12'-0	4	6	40	4	6	42	4	12	33	4	17	30	4	12	39	4	17	30	6	18	39'-0	6	18	12'-11	6	18	11'-8	6	9	11'-0	7'-5	3'-7	5	18	39'-0	7	18	15'-6
2	4	9	11'-7	7	9	11'-7	4	6	40	4	6	42	4	12	33	4	17	30	4	12	39	4	17	30	6	12	39'-0	5	12	10'-8	4	12	8'-2	6	9	9'-0	5'-7	3'-5	4	9	39'-0	5	9	14'-0
3-6	5	12	11'-8	7	9	11'-8	4	6	40	4	6	42	4	12	33	4	17	30	4	12	39	4	17	30	6	12	39'-0	5	12	10'-3	4	12	7'-6	6	9	8'-3	4'-10	3'-5	5	12	39'-0	6	12	14'-0
7-8	4	6	11'-8	7	9	11'-8	4	6	40	4	6	42	4	12	33	4	17	30	4	12	39	4	17	30	5	9	39'-0	4	9	8'-7	4	9	4'-8	6	9	7'-2	3'-10	3'-4	4	9	39'-0	6	9	8'-5
9-10	5	12	11'-11	7	9	11'-11	4	6	40	4	6	42	4	12	33	4	17	30	4	12	39	4	17	30	6	12	39'-0	5	12	8'-9	4	12	4'-8	6	9	7'-4	3'-8	3'-8	5	12	39'-0	7	12	8'-5
11-12	4	6	12'-1	7	9	12'-1	4	6	40	4	6	42	4	12	33	4	17	30	4	12	39	4	17	30	6	12	39'-0	5	12	9'-0	4	12	5'-0	6	9	7'-2	3'-7	3'-7	5	12	39'-0	7	12	8'-3
13-15	4	6	12'-4	7	9	12'-4	4	6	40	4	6	42	4	12	33	4	17	30	4	12	39	4	17	30	6	12	39'-0	5	12	10'-0	4	12	5'-2	6	9	7'-4	3'-8	3'-8	5	12	39'-0	7	12	8'-4
16-17	4	6	12'-6	7	9	12'-6	4	6	40	4	6	42	4	12	33	4	17	30	4	12	39	4	17	30	7	18	39'-2	7	18	11'-1	5	18	5'-10	6	9	7'-6	3'-9	3'-9	5	12	39'-2	7	12	8'-4
18-19	5	9	12'-8	7	9	12'-8	4	6	40	4	6	42	4	12	33	4	17	30	4	12	39	4	17	30	7	18	39'-4	7	18	11'-6	5	18	6'-1	6	9	7'-8	3'-10	3'-10	5	9	39'-4	6	9	8'-6
20-21	6	9	12'-10	7	9	12'-10	4	6	40	4	6	42	4	12	33	4	17	30	4	12	39	4	17	30	5	9	39'-6	5	9	11'-9	4	9	6'-2	6	9	7'-10	3'-11	3'-11	5	9	39'-6	6	9	8'-8
22-23	6	9	13'-0	7	9	13'-0	4	6	40	4	6	42	4	12	33	4	17	30	4	12	39	4	17	30	5	9	39'-8	5	9	11'-11	4	9	6'-4	6	9	8'-0	4'-0	4'-0	5	9	39'-8	6	9	8'-9
24-25	4	6	13'-3	7	9	13'-3	4	6	40	4	6	42	4	12	33	4	17	30	5	12	39	4	17	30	5	9	39'-10	5	9	12'-4	4	9	6'-6	5	6	8'-0	4'-0	4'-0	5	9	39'-10	6	9	9'-0

BAR LIST	k9			m1			m2			m3			m4					m6			m7			m9			QUANTITIES				
																											CONCRETE (CY/FT)				STEEL
FILL	SIZE	SP.	L	SIZE	SP.	L	SIZE	SP.	L	SIZE	SP.	L	SIZE	SP.	L	H	V	SIZE	SP.	L	SIZE	SP.	L	SIZE	SP.	L	SLAB	FLOOR	WALLS	TOTAL	(LB/FT)
0	7	4.5	39'-0	5	12	39'-6	5	12	9'-0	4	12	4'-0	6	9	16'-8	6'-3	10'-5	4	9	39'-6	5	9	8'-7	5	4.5	39'-6	1.847	1.499	1.180	4.526	640.11
1	7	4.5	39'-0	5	12	39'-6	5	12	8'-11	4	12	4'-0	6	9	16'-7	6'-2	10'-5	4	9	39'-6	5	9	8'-7	5	4.5	39'-6	1.726	1.499	1.180	4.405	625.66
2	5	4.5	39'-0	6	12	39'-6	5	12	7'-5	4	12	3'-10	7	9	15'-1	4'-10	10'-3	5	12	39'-6	7	12	8'-7	7	4.5	39'-6	1.362	1.315	1.180	3.857	676.87
3-6	6	4.5	39'-0	6	12	39'-6	5	12	7'-11	4	12	3'-10	6	9	14'-9	4'-5	10'-4	5	12	39'-6	7	12	8'-6	7	4.5	39'-6	1.362	1.438	1.180	3.980	664.42
7-8	6	4.5	39'-0	6	12	39'-6	5	12	8'-6	4	12	4'-2	6	9	14'-3	3'-10	10'-5	5	9	39'-6	6	9	7'-10	6	4.5	39'-6	1.301	1.499	1.180	3.980	646.00
9-10	7	4.5	39'-0	6	12	39'-6	5	12	8'-11	4	12	4'-6	6	9	14'-2	3'-8	10'-6	5	12	39'-6	7	12	8'-1	7	4.5	39'-6	1.422	1.684	1.180	4.286	651.26
11-12	7	4.5	39'-0	5	9	39'-6	5	9	9'-7	4	9	5'-0	6	9	14'-3	3'-8	10'-7	5	12	39'-6	7	12	8'-1	7	4.5	39'-6	1.544	1.807	1.180	4.531	660.97
13-15	7	4.5	39'-0	5	9	39'-6	5	9	10'-8	4	9	4'-10	6	9	14'-6	3'-9	10'-9	5	12	39'-6	7	12	8'-4	7	4.5	39'-6	1.726	2.053	1.180	4.959	670.82
16-17	7	4.5	39'-2	5	9	39'-8	5	9	10'-11	4	9	5'-2	6	9	14'-7	3'-9	10'-10	5	12	39'-8	7	12	8'-5	7	4.5	39'-8	1.857	2.183	1.242	5.282	682.45
18-19	6	4.5	39'-4	5	9	39'-10	5	9	11'-7	4	9	5'-5	6	9	14'-9	3'-10	10'-11	5	12	39'-10	7	12	8'-7	7	4.5	39'-10	1.990	2.318	1.301	5.609	702.32
20-21	6	4.5	39'-6	6	12	40'-0	6	12	11'-9	4	12	5'-6	6	9	14'-11	3'-11	11'-0	5	12	40'-0	7	12	8'-9	7	4.5	40'-0	2.124	2.454	1.360	5.938	729.95
22-23	6	4.5	39'-8	6	12	40'-2	6	12	11'-10	4	12	5'-8	6	9	15'-0	3'-11	11'-1	5	9	40'-2	6	9	8'-11	6	4.5	40'-2	2.259	2.591	1.419	6.269	745.63
24-25	6	4.5	39'-10	6	12	40'-4	6	12	12'-4	4	12	5'-10	5	6	15'-4	4'-1	11'-3	5	12	40'-4	7	12	9'-3	7	4.5	40'-4	2.456	2.791	1.478	6.725	742.47

BENT BAR DETAIL

BARS	D
5	$3\frac{3}{4}$
6	$4\frac{1}{2}$
7	$5\frac{1}{4}$

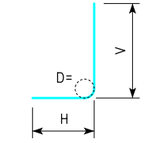

k4 & m4

NOTE:
ALL DIMENSIONS ARE OUT TO OUT.
D = PIN DIAMETER.

NOTES:

1. DIMENSIONS LISTED ON THIS SHEET TO BE USED IN CONJUNCTION WITH SHEET TRRCB G2-12.
2. DIMENSIONS "A", "B", "C", "D", "E", AND "SP." LISTED IN THE BAR LIST ARE IN INCHES.

LATEST REVISION DATE

APPROVED BY BRIDGE ENGINEER

IOWA DOT Highway Division

STANDARD DESIGN

TRIPLE REINFORCED CONCRETE BOX CULVERTS

APRIL, 2012

CULVERT BARREL DETAILS

12 x 10 BARREL SECTIONS

TRRCB 12-10-12

SHEET 2 OF 2

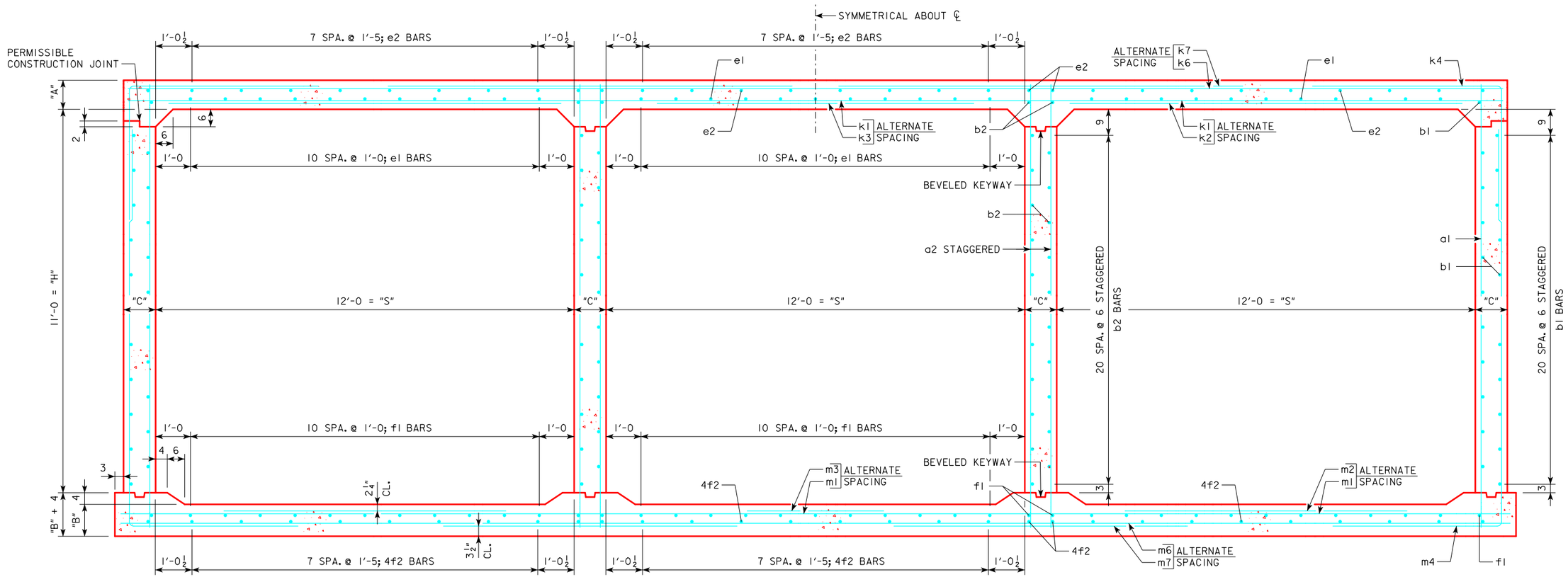

TRIPLE 12 x 11 BARREL SECTION

NOTES:

1. DIMENSIONS LISTED ON THIS SHEET TO BE USED IN CONJUNCTION WITH SHEET TRRCB G2-12.
2. DIMENSIONS "A", "B", "C", "D", "E", AND "SP." LISTED IN THE BAR LIST ARE IN INCHES.

LATEST REVISION DATE

APPROVED BY BRIDGE ENGINEER

IOWA DOT Highway Division

STANDARD DESIGN

TRIPLE REINFORCED CONCRETE BOX CULVERTS

APRIL, 2012

CULVERT BARREL DETAILS

12 x 11 BARREL SECTIONS

TRRCB 12-11-12

SHEET 1 OF 2

VARIABLE DIMENSIONS AND QUANTITIES FOR TRIPLE 12 x 11 BARREL SECTIONS

DIMENSIONS													
FILL	S	H	A	B	C	D	E	R	T	U	W	X	Z
0	12	11	14	11.5	11	9	9	0'-2	0'-0	7'-9	2'-8	4'-3	4'-3
1	12	11	13.5	11.5	11	9	9	0'-7	0'-2	7'-9	2'-8	4'-3	4'-3
2	12	11	10	10	11	9	9	2'-6	1'-8	6'-7	3'-3	4'-6	4'-3
3-6	12	11	10	11	11	9	9	1'-11	1'-6	5'-5	3'-1	4'-6	4'-2
7-8	12	11	10	11.5	11	9	9	4'-1	2'-10	4'-0	2'-11	4'-4	3'-10
9-10	12	11	11	13	11	9	9	3'-10	2'-10	3'-11	2'-8	4'-1	3'-11
11-12	12	11	12	14	11	6	9	3'-10	2'-7	4'-0	2'-6	3'-10	3'-10
13-15	12	11	13.5	16	11	9	9	3'-9	2'-3	3'-11	2'-2	3'-10	3'-11
16-17	12	11	14.5	17	12	9	9	3'-8	2'-2	4'-0	2'-1	3'-8	4'-0
18-19	12	11	15.5	18	12.5	9	9	3'-4	1'-8	4'-0	1'-8	3'-7	4'-1
20-21	12	11	16.5	19	13	9	6	3'-3	1'-6	4'-1	1'-7	3'-5	4'-2
22-23	12	11	17.5	20	13.5	9	6	3'-3	1'-6	4'-2	1'-6	3'-6	4'-3
24-25	12	11	18.5	21.5	14	9	9	3'-3	1'-1	4'-3	1'-1	3'-5	4'-5

BAR LIST																																															
	a1			a2			b1			b2			e1			e2			f1			f2			k1			k2			k3			k4					k6			k7		
FILL	SIZE	SP.	L	SIZE	SP.	L	SIZE	SP.	NO.	SIZE	SP.	NO.	SIZE	SP.	NO.	SIZE	SP.	NO.	SIZE	SP.	NO.	SIZE	SP.	NO.	SIZE	SP.	L	SIZE	SP.	L	SIZE	SP.	L	SIZE	SP.	L	H	V	SIZE	SP.	L	SIZE	SP.	L
0	4	9	13'-0	7	9	13'-0	4	6	44	4	6	46	4	12	33	4	17	30	4	12	39	4	17	30	5	12	39'-4	5	12	13'-2	5	12	12'-7	6	9	11'-2	7'-6	3'-8	5	18	39'-4	7	18	15'-6
1	4	9	13'-0	7	9	13'-0	4	6	44	4	6	46	4	12	33	4	17	30	4	12	39	4	17	30	6	18	39'-4	6	18	13'-0	6	18	11'-9	6	9	11'-1	7'-6	3'-7	5	18	39'-4	7	18	15'-6
2	4	12	12'-7	7	9	12'-7	4	6	44	4	6	46	4	12	33	4	17	30	4	12	39	4	17	30	6	12	39'-4	5	12	10'-10	4	12	7'-11	7	9	10'-1	6'-2	3'-11	5	18	39'-4	8	18	14'-9
3-6	4	12	12'-8	7	9	12'-8	4	6	44	4	6	46	4	12	33	4	17	30	4	12	39	4	17	30	7	18	39'-4	7	18	11'-3	6	18	9'-1	7	9	9'-4	5'-5	3'-11	5	12	39'-4	6	12	11'-7
7-8	5	12	12'-8	7	9	12'-8	4	6	44	4	6	46	4	12	33	4	17	30	4	12	39	4	17	30	5	9	39'-4	4	9	8'-5	4	9	4'-9	5	6	7'-3	4'-3	3'-0	5	9	39'-4	5	9	8'-4
9-10	5	9	12'-11	7	9	12'-11	4	6	44	4	6	46	4	12	33	4	17	30	4	12	39	4	17	30	5	9	39'-4	4	9	8'-8	4	9	5'-3	6	9	7'-6	4'-1	3'-5	4	9	39'-4	6	9	8'-2
11-12	4	6	13'-1	7	9	13'-1	4	6	44	4	6	46	4	12	33	4	17	30	4	12	39	4	17	30	6	12	39'-4	5	12	9'-1	4	12	5'-3	5	6	7'-2	4'-0	3'-2	5	12	39'-4	7	12	8'-4
13-15	5	9	13'-4	7	9	13'-4	4	6	44	4	6	46	4	12	33	4	17	30	4	12	39	4	17	30	6	12	39'-4	5	12	10'-0	4	12	5'-5	5	6	7'-5	4'-1	3'-4	5	12	39'-4	7	12	8'-3
16-17	6	9	13'-6	7	9	13'-6	4	6	44	4	6	46	4	12	33	4	17	30	4	12	39	4	17	30	6	12	39'-8	5	12	10'-3	4	12	5'-8	5	6	7'-6	4'-1	3'-5	5	12	39'-8	7	12	8'-5
18-19	4	9	13'-8	7	9	13'-8	4	6	44	4	6	46	4	12	33	4	17	30	4	12	39	4	17	30	7	18	39'-10	7	18	11'-5	6	18	6'-4	7	9	8'-8	4'-4	4'-4	5	12	39'-10	7	12	8'-5
20-21	4	9	13'-10	6	6	13'-10	4	6	44	4	6	46	4	12	33	4	17	30	4	12	39	4	17	30	7	18	40'-0	7	18	11'-9	6	18	6'-7	7	9	8'-10	4'-5	4'-5	5	9	40'-0	6	9	8'-7
22-23	4	9	14'-0	6	6	14'-0	4	6	44	4	6	46	4	12	33	4	17	30	4	12	39	4	17	30	5	9	40'-2	5	9	11'-11	4	9	6'-8	7	9	9'-0	4'-6	4'-6	5	9	40'-2	6	9	8'-9
24-25	4	9	14'-3	8	9	14'-3	4	6	44	4	6	46	4	12	33	4	17	30	5	12	39	4	17	30	6	12	40'-4	6	12	12'-6	5	12	6'-8	7	9	9'-2	4'-7	4'-7	5	9	40'-4	6	9	8'-11

BAR LIST																														QUANTITIES				
	k9			m1			m2			m3			m4					m6			m7			m9			CONCRETE (CY/FT)				STEEL
FILL	SIZE	SP.	L	SIZE	SP.	L	SIZE	SP.	L	SIZE	SP.	L	SIZE	SP.	L	H	V	SIZE	SP.	L	SIZE	SP.	L	SIZE	SP.	L	SLAB	FLOOR	WALLS	TOTAL	(LB/FT)
0	7	4.5	39'-4	5	12	39'-10	5	12	8'-11	4	12	4'-5	6	9	17'-9	6'-4	11'-5	4	9	39'-10	5	9	8'-7	5	4.5	39'-10	1.807	1.512	1.437	4.756	647.50
1	7	4.5	39'-4	5	12	39'-10	5	12	8'-11	4	12	4'-5	6	9	17'-8	6'-3	11'-5	4	9	39'-10	5	9	8'-6	5	4.5	39'-10	1.745	1.512	1.437	4.694	644.79
2	8	4.5	39'-4	6	12	39'-10	5	12	7'-7	4	12	3'-11	7	9	16'-3	5'-0	11'-3	5	12	39'-10	7	12	8'-7	7	4.5	39'-10	1.317	1.326	1.437	4.080	725.63
3-6	6	4.5	39'-4	6	12	39'-10	5	12	8'-1	4	12	3'-11	7	9	16'-2	4'-10	11'-4	5	12	39'-10	7	12	8'-6	7	4.5	39'-10	1.317	1.450	1.437	4.204	722.34
7-8	5	4.5	39'-4	6	12	39'-10	5	12	8'-7	4	12	4'-3	5	6	15'-7	4'-2	11'-5	5	9	39'-10	6	9	7'-10	6	4.5	39'-10	1.317	1.512	1.437	4.266	668.50
9-10	6	4.5	39'-4	6	12	39'-10	5	12	9'-0	4	12	4'-9	6	9	15'-7	4'-1	11'-6	5	12	39'-10	7	12	8'-1	7	4.5	39'-10	1.439	1.698	1.437	4.574	663.74
11-12	7	4.5	39'-4	5	9	39'-10	5	9	9'-8	4	9	5'-3	5	6	15'-8	4'-1	11'-7	5	12	39'-10	7	12	8'-0	7	4.5	39'-10	1.562	1.822	1.437	4.821	683.74
13-15	7	4.5	39'-4	5	9	39'-10	5	9	10'-8	4	9	5'-3	5	6	15'-11	4'-2	11'-9	5	12	39'-10	7	12	8'-4	7	4.5	39'-10	1.745	2.070	1.437	5.252	695.13
16-17	7	4.5	39'-8	5	9	40'-2	5	9	11'-0	4	9	5'-8	5	6	16'-0	4'-2	11'-10	5	12	40'-2	7	12	8'-5	7	4.5	40'-2	1.888	2.216	1.567	5.671	718.58
18-19	7	4.5	39'-10	5	9	40'-4	5	9	11'-7	4	9	5'-10	7	9	16'-1	4'-2	11'-11	5	12	40'-4	7	12	8'-7	7	4.5	40'-4	2.023	2.352	1.632	6.007	743.84
20-21	6	4.5	40'-0	5	9	40'-6	5	9	11'-10	4	9	6'-3	7	9	16'-3	4'-3	12'-0	5	12	40'-6	7	12	8'-10	7	4.5	40'-6	2.158	2.489	1.697	6.344	769.00
22-23	6	4.5	40'-2	6	12	40'-8	6	12	12'-1	4	12	6'-2	7	9	16'-5	4'-4	12'-1	5	9	40'-8	6	9	9'-0	6	4.5	40'-8	2.294	2.628	1.763	6.685	789.58
24-25	6	4.5	40'-4	6	12	40'-10	6	12	12'-6	4	12	6'-4	7	9	16'-8	4'-5	12'-3	5	12	40'-10	7	12	9'-4	7	4.5	40'-10	2.432	2.831	1.828	7.091	830.61

BENT BAR DETAIL

BARS	D
5	$3\frac{3}{4}$
6	$4\frac{1}{2}$
7	$5\frac{1}{4}$

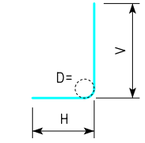

k4 & m4

NOTE:
ALL DIMENSIONS ARE OUT TO OUT.
D = PIN DIAMETER.

NOTES:

1. DIMENSIONS LISTED ON THIS SHEET TO BE USED IN CONJUNCTION WITH SHEET TRRCB G2-12.
2. DIMENSIONS "A", "B", "C", "D", "E", AND "SP." LISTED IN THE BAR LIST ARE IN INCHES.

LATEST REVISION DATE

APPROVED BY BRIDGE ENGINEER

IOWA DOT Highway Division

STANDARD DESIGN

TRIPLE REINFORCED CONCRETE BOX CULVERTS

APRIL, 2012

CULVERT BARREL DETAILS

12 x 11 BARREL SECTIONS

TRRCB 12-11-12

SHEET 2 OF 2

ENGLISHLRFDSIGNEDTRIPLECULVERTS.DGN - TRRCB 12-11s2-12 - THIS SHEET ISSUED 04-12.

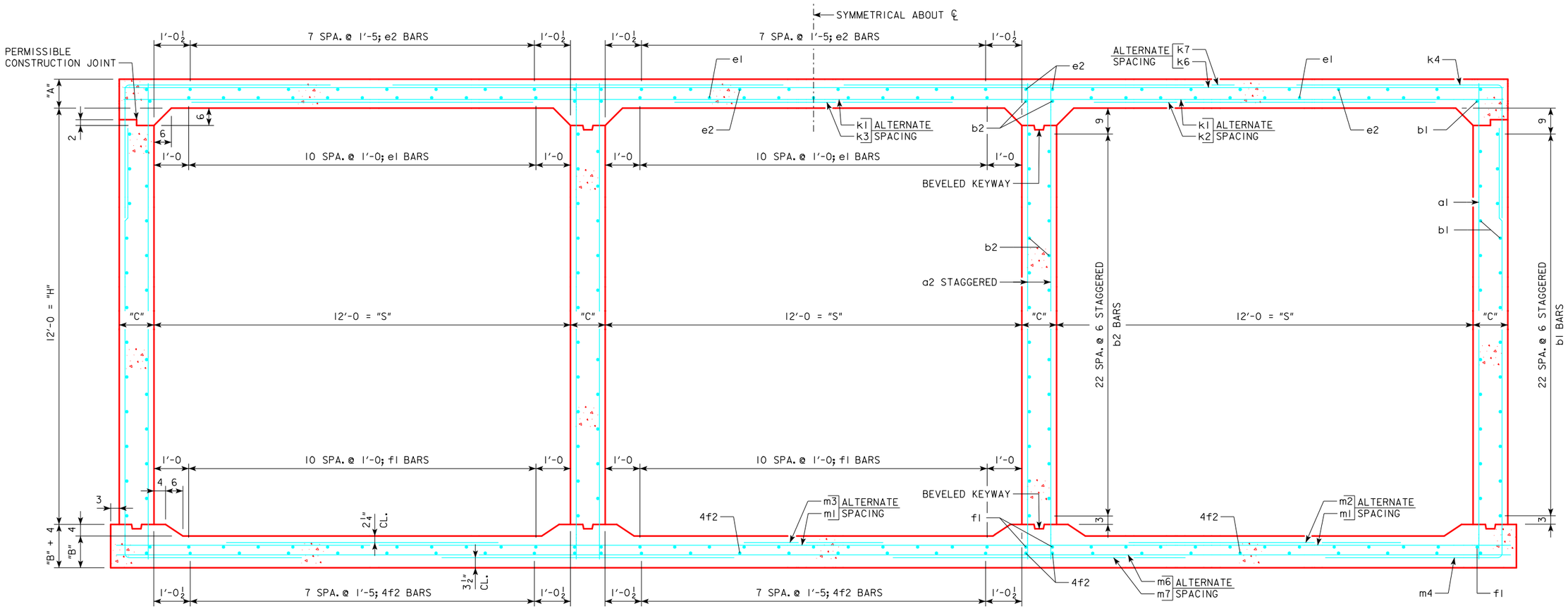

TRIPLE 12 x 12 BARREL SECTION

NOTES:

1. DIMENSIONS LISTED ON THIS SHEET TO BE USED IN CONJUNCTION WITH SHEET TRRCB G2-12.
2. DIMENSIONS "A", "B", "C", "D", "E", AND "SP." LISTED IN THE BAR LIST ARE IN INCHES.

LATEST REVISION DATE

APPROVED BY BRIDGE ENGINEER

IOWA DOT Highway Division

STANDARD DESIGN

TRIPLE REINFORCED CONCRETE BOX CULVERTS

APRIL, 2012

CULVERT BARREL DETAILS

12 x 12 BARREL SECTIONS

TRRCB 12-12-12

SHEET 1 OF 2

VARIABLE DIMENSIONS AND QUANTITIES FOR TRIPLE 12 x 12 BARREL SECTIONS

DIMENSIONS													
FILL	S	H	A	B	C	D	E	R	T	U	W	X	Z
0	12	12	14.5	12	12	9	9	0'-3	0'-0	7'-10	2'-9	4'-4	4'-4
1	12	12	13.5	11.5	12	9	9	0'-7	0'-3	7'-10	2'-9	4'-1	4'-3
2	12	12	10	10	12	9	9	2'-6	2'-0	6'-7	3'-4	4'-6	4'-3
3-6	12	12	10	11	12	9	9	2'-6	2'-1	5'-5	3'-1	4'-6	4'-3
7-8	12	12	9.5	11.5	12	9	9	3'-11	2'-11	4'-2	2'-11	4'-5	3'-11
9-10	12	12	11	13	12	9	9	3'-10	2'-9	4'-0	2'-8	4'-1	4'-0
11-12	12	12	12	14.5	12	9	9	3'-8	2'-7	4'-0	2'-8	3'-11	3'-11
13-15	12	12	13.5	16	12.5	9	9	3'-8	2'-5	4'-0	2'-3	3'-8	4'-0
16-17	12	12	14.5	17	13	9	6	3'-7	2'-3	4'-0	2'-1	3'-6	4'-1
18-19	12	12	15.5	18	13.5	9	6	3'-3	1'-8	4'-1	1'-8	3'-5	4'-2
20-21	12	12	16.5	19	14	9	9	3'-2	1'-7	4'-2	1'-7	3'-4	4'-3
22-23	12	12	17.5	20	14.5	6	9	3'-1	1'-5	4'-2	1'-7	3'-4	4'-4
24-25	12	12	18.5	21.5	15	6	9	3'-1	1'-1	4'-3	1'-1	3'-3	4'-5

BAR LIST																																														
	a1			a2			b1			b2			e1			e2			f1			f2			k1			k2			k3			k4					k6			k7		
FILL	SIZE	SP.	L	SIZE	SP.	L	SIZE	SP.	NO.	SIZE	SP.	NO.	SIZE	SP.	NO.	SIZE	SP.	NO.	SIZE	SP.	NO.	SIZE	SP.	NO.	SIZE	SP.	L	SIZE	SP.	L	SIZE	SP.	L	SIZE	SP.	L	H	V	SIZE	SP.	L	SIZE	SP.	L
0	4	12	14'-1	7	9	14'-1	4	6	48	4	6	50	4	12	33	5	17	30	4	12	39	4	17	30	5	12	39'-8	5	12	13'-4	5	12	12'-6	6	9	11'-4	7'-7	3'-9	5	18	39'-8	7	18	15'-8
1	5	12	14'-0	7	9	14'-0	4	6	48	4	6	50	4	12	33	4	17	30	4	12	39	4	17	30	6	18	39'-8	6	18	13'-1	6	18	11'-10	6	9	11'-2	7'-7	3'-7	5	18	39'-8	7	18	15'-8
2	4	12	13'-7	7	9	13'-7	4	6	48	4	6	50	4	12	33	4	17	30	4	12	39	4	17	30	6	12	39'-8	5	12	10'-3	4	12	8'-0	7	9	10'-7	6'-8	3'-11	5	18	39'-8	8	18	14'-10
3-6	4	9	13'-8	7	9	13'-8	4	6	48	4	6	50	4	12	33	4	17	30	4	12	39	4	17	30	6	12	39'-8	5	12	9'-10	4	12	8'-0	7	9	9'-10	5'-11	3'-11	5	12	39'-8	6	12	11'-3
7-8	4	9	13'-8	7	9	13'-8	4	6	48	4	6	50	4	12	33	4	17	30	4	12	39	4	17	30	6	12	39'-8	5	12	8'-3	4	12	5'-2	7	9	8'-6	4'-8	3'-10	5	12	39'-8	7	12	8'-6
9-10	5	9	13'-11	7	9	13'-11	4	6	48	4	6	50	4	12	33	4	17	30	4	12	39	4	17	30	5	9	39'-8	4	9	8'-9	4	9	5'-4	5	6	7'-7	4'-6	3'-1	4	9	39'-8	6	9	8'-2
11-12	6	9	14'-1	7	9	14'-1	4	6	48	4	6	50	4	12	33	4	17	30	4	12	39	4	17	30	5	9	39'-8	4	9	9'-1	4	9	5'-8	5	6	7'-7	4'-5	3'-2	5	12	39'-8	7	12	8'-3
13-15	6	9	14'-4	7	9	14'-4	4	6	48	4	6	50	4	12	33	4	17	30	4	12	39	4	17	30	6	12	39'-10	5	12	9'-10	4	12	5'-8	5	6	7'-10	4'-6	3'-4	5	12	39'-10	7	12	8'-4
16-17	5	12	14'-6	6	6	14'-6	4	6	48	4	6	50	4	12	33	4	17	30	4	12	39	4	17	30	6	12	40'-0	5	12	10'-2	4	12	5'-11	7	9	9'-0	4'-6	4'-6	5	12	40'-0	7	12	8'-4
18-19	5	12	14'-8	6	6	14'-8	4	6	48	4	6	50	4	12	33	4	17	30	4	12	39	4	17	30	7	18	40'-2	7	18	11'-5	6	18	6'-8	7	9	9'-0	4'-6	4'-6	5	12	40'-2	7	12	8'-6
20-21	5	12	14'-10	8	9	14'-10	4	6	48	4	6	50	4	12	33	4	17	30	4	12	39	4	17	30	7	18	40'-4	7	18	11'-8	6	18	6'-10	6	6	8'-6	4'-7	3'-11	5	12	40'-4	7	12	8'-8
22-23	4	6	15'-0	8	9	15'-0	4	6	48	4	6	50	4	12	33	4	17	30	4	12	39	4	17	30	7	18	40'-6	7	18	12'-0	6	18	7'-0	7	9	9'-2	4'-7	4'-7	5	12	40'-6	7	12	8'-9
24-25	4	6	15'-3	8	9	15'-3	4	6	48	4	6	50	4	12	33	4	17	30	5	12	39	4	17	30	5	9	40'-8	5	9	12'-7	4	9	7'-1	7	9	9'-4	4'-8	4'-8	5	9	40'-8	6	9	8'-11

BAR LIST																																				QUANTITIES				
	k9			m1			m2			m3			m4					m6			m7			m9			CONCRETE (CY/FT)				STEEL
FILL	SIZE	SP.	L	SIZE	SP.	L	SIZE	SP.	L	SIZE	SP.	L	SIZE	SP.	L	H	V	SIZE	SP.	L	SIZE	SP.	L	SIZE	SP.	L	SLAB	FLOOR	WALLS	TOTAL	(LB/FT)
0	7	4.5	39'-8	5	12	40'-2	5	12	9'-3	4	12	4'-4	7	9	19'-8	7'-3	12'-5	4	9	40'-2	5	9	8'-8	5	4.5	40'-2	1.888	1.591	1.715	5.194	707.24
1	7	4.5	39'-8	5	12	40'-2	5	12	8'-10	4	12	4'-10	6	9	18'-8	6'-3	12'-5	4	9	40'-2	5	9	8'-6	5	4.5	40'-2	1.765	1.528	1.715	5.008	668.92
2	8	4.5	39'-8	6	12	40'-2	5	12	7'-5	4	12	4'-0	7	9	17'-5	5'-2	12'-3	5	12	40'-2	7	12	8'-6	7	4.5	40'-2	1.333	1.341	1.715	4.389	747.74
3-6	6	4.5	39'-8	6	12	40'-2	5	12	7'-10	4	12	4'-0	7	9	17'-5	5'-1	12'-4	5	12	40'-2	7	12	8'-6	7	4.5	40'-2	1.333	1.466	1.715	4.514	739.95
7-8	7	4.5	39'-8	6	12	40'-2	5	12	8'-4	4	12	4'-2	7	9	17'-0	4'-7	12'-5	5	9	40'-2	6	9	7'-11	6	4.5	40'-2	1.271	1.528	1.715	4.514	737.39
9-10	6	4.5	39'-8	6	12	40'-2	5	12	9'-0	4	12	4'-10	5	6	17'-0	4'-6	12'-6	5	12	40'-2	7	12	8'-2	7	4.5	40'-2	1.456	1.716	1.715	4.887	686.92
11-12	7	4.5	39'-8	6	12	40'-2	5	12	9'-2	4	12	5'-2	5	6	17'-3	4'-7	12'-8	4	9	40'-2	6	9	8'-1	6	4.5	40'-2	1.580	1.903	1.715	5.198	708.00
13-15	7	4.5	39'-10	5	9	40'-4	5	9	10'-3	4	9	5'-8	5	6	17'-4	4'-7	12'-9	5	12	40'-4	7	12	8'-4	7	4.5	40'-4	1.775	2.101	1.787	5.663	736.32
16-17	7	4.5	40'-0	5	9	40'-6	5	9	10'-11	4	9	6'-1	7	9	17'-5	4'-7	12'-10	5	12	40'-6	7	12	8'-6	7	4.5	40'-6	1.909	2.237	1.858	6.004	766.79
18-19	7	4.5	40'-2	5	9	40'-8	5	9	11'-7	4	9	6'-4	7	9	17'-6	4'-7	12'-11	5	12	40'-8	7	12	8'-8	7	4.5	40'-8	2.044	2.375	1.929	6.348	782.29
20-21	7	4.5	40'-4	5	9	40'-10	5	9	11'-10	4	9	6'-6	6	6	17'-8	4'-8	13'-0	5	12	40'-10	7	12	8'-10	7	4.5	40'-10	2.180	2.513	2.000	6.693	812.89
22-23	7	4.5	40'-6	6	12	41'-0	6	12	12'-1	5	12	6'-6	7	9	17'-9	4'-8	13'-1	5	9	41'-0	6	9	9'-1	6	4.5	41'-0	2.318	2.652	2.072	7.042	841.21
24-25	6	4.5	40'-8	6	12	41'-2	6	12	12'-8	4	12	6'-9	7	9	18'-1	4'-10	13'-3	5	12	41'-2	7	12	9'-4	7	4.5	41'-2	2.456	2.857	2.143	7.456	860.24

BENT BAR DETAIL

BARS	D
5	$3\frac{3}{4}$
6	$4\frac{1}{2}$
7	$5\frac{1}{4}$

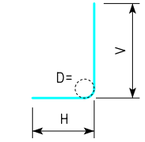

k4 & m4

NOTE:
ALL DIMENSIONS ARE OUT TO OUT.
D = PIN DIAMETER.

NOTES:

1. DIMENSIONS LISTED ON THIS SHEET TO BE USED IN CONJUNCTION WITH SHEET TRRCB G2-12.
2. DIMENSIONS "A", "B", "C", "D", "E", AND "SP." LISTED IN THE BAR LIST ARE IN INCHES.

LATEST REVISION DATE

APPROVED BY BRIDGE ENGINEER

IOWA DOT Highway Division

STANDARD DESIGN

TRIPLE REINFORCED CONCRETE BOX CULVERTS

APRIL, 2012

CULVERT BARREL DETAILS

12 x 12 BARREL SECTIONS

TRRCB 12-12-12

SHEET 2 OF 2

ENGLISHLRFDSIGNEDTRIPLECULVERTS.DGN - TRRCB 12-12-S212 - THIS SHEET ISSUED 04-12.

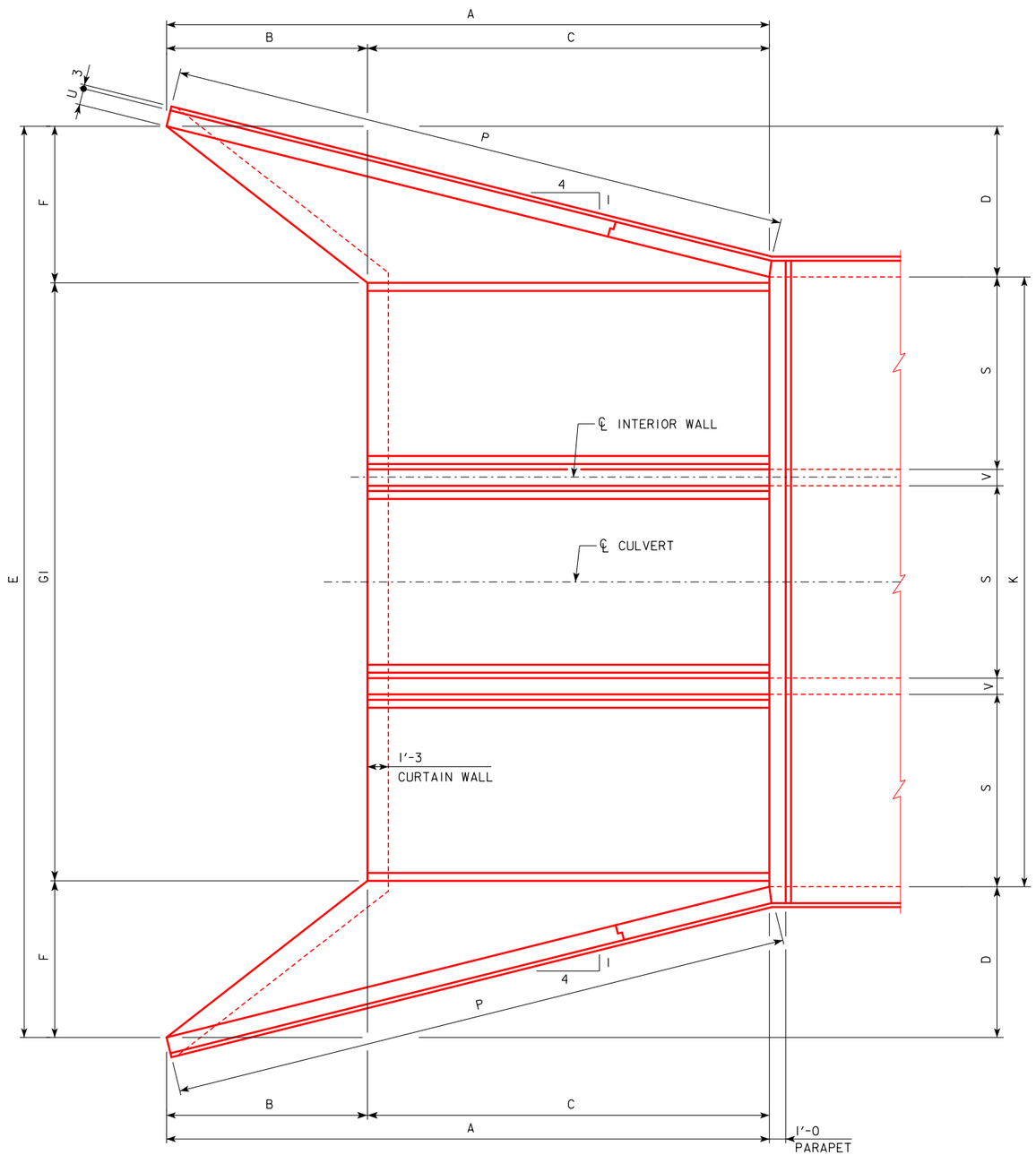

PLAN VIEW

DIMENSION TABLE

S X H	12' X 12'	12' X 11'	12' X 10'	12' X 9'	12' X 8'	12' X 7'	12' X 6'	12' X 5'	12' X 4'	S X H
A	37'-0	34'-0	31'-0	28'-0	25'-0	22'-0	19'-0	16'-0	13'-0	A
B	12'-4	11'-4	10'-4	9'-4	8'-4	7'-4	6'-4	5'-4	4'-4	B
C	24'-8	22'-8	20'-8	18'-8	16'-8	14'-8	12'-8	10'-8	8'-8	C
D	9'-3	8'-6	7'-9	7'-0	6'-3	5'-6	4'-9	4'-0	3'-3	D
E	56'-6	54'-10	53'-2	51'-8	50'-2	48'-6	47'-0	45'-6	44'-0	E
F	9'-7	8'-10	8'-1	7'-4	6'-7	5'-10	5'-1	4'-4	3'-7	F
G1	37'-4	37'-2	37'-0	37'-0	37'-0	36'-10	36'-10	36'-10	36'-10	G1
G2	38'-6 3/4	38'-4 5/8	38'-2 5/8	38'-2 5/8	38'-2 1/2	38'-0 1/2	38'-0 3/8	38'-0 1/4	38'-0 1/8	G2
G3	15'-7 3/8	14'-4 3/8	13'-1 3/8	11'-10 3/8	10'-7 3/8	9'-4 1/2	8'-1 1/2	6'-10 1/2	5'-7 1/2	G3
G4	16'-5 7/8	15'-0 1/2	13'-7	12'-4	11'-1	9'-7 5/8	8'-4 3/4	7'-1 7/8	5'-11	G4
G5	0'-3 1/8	0'-5 3/8	0'-7 3/4	0'-7 5/8	0'-7 5/8	0'-9 7/8	0'-9 3/4	0'-9 3/4	0'-9 5/8	G5
K	38'-0	37'-10	37'-8	37'-8	37'-8	37'-6	37'-6	37'-6	37'-6	K
P	38'-1 5/8	35'-0 1/2	31'-11 1/2	28'-10 3/8	25'-9 1/4	22'-8 1/8	19'-7	16'-5 7/8	13'-4 3/4	P
R1	40'-1	36'-10	33'-7	30'-4	27'-1	23'-10	20'-7	17'-4	14'-1	R1
R2	27'-0 1/8	24'-9 1/4	22'-6 1/2	20'-3 3/4	18'-0 7/8	15'-10 1/8	13'-7 3/8	11'-4 3/4	9'-2	R2
T	1'-2	1'-2	1'-2	1'-2	1'-2	1'-2	1'-2	1'-2	1'-2	T
U	1'-0	0'-11	0'-10	0'-10	0'-10	0'-9	0'-9	0'-9	0'-9	U
V	1'-0	0'-11	0'-10	0'-10	0'-10	0'-9	0'-9	0'-9	0'-9	V
W	5'-0	4'-9	4'-6	4'-3	4'-0	3'-9	3'-6	3'-6	3'-6	W

S X H	10' X 12'	10' X 11'	10' X 10'	10' X 9'	10' X 8'	10' X 7'	10' X 6'	10' X 5'	10' X 4'	S X H
A	37'-0	34'-0	31'-0	28'-0	25'-0	22'-0	19'-0	16'-0	13'-0	A
B	12'-4	11'-4	10'-4	9'-4	8'-4	7'-4	6'-4	5'-4	4'-4	B
C	24'-8	22'-8	20'-8	18'-8	16'-8	14'-8	12'-8	10'-8	8'-8	C
D	9'-3	8'-6	7'-9	7'-0	6'-3	5'-6	4'-9	4'-0	3'-3	D
E	50'-6	48'-10	47'-2	45'-8	44'-2	42'-6	41'-0	39'-6	38'-0	E
F	9'-7	8'-10	8'-1	7'-4	6'-7	5'-10	5'-1	4'-4	3'-7	F
G1	31'-4	31'-2	31'-0	31'-0	31'-0	30'-10	30'-10	30'-10	30'-10	G1
G2	32'-6 3/4	32'-4 5/8	32'-2 5/8	32'-2 5/8	32'-2 1/2	32'-0 1/2	32'-0 3/8	32'-0 1/4	32'-0 1/8	G2
G3	15'-7 3/8	14'-4 3/8	13'-1 3/8	11'-10 3/8	10'-7 3/8	9'-4 1/2	8'-1 1/2	6'-10 1/2	5'-7 1/2	G3
G4	16'-5 7/8	15'-0 1/2	13'-7	12'-4	11'-1	9'-7 5/8	8'-4 3/4	7'-1 7/8	5'-11	G4
G5	0'-3 1/8	0'-5 3/8	0'-7 3/4	0'-7 5/8	0'-7 5/8	0'-9 7/8	0'-9 3/4	0'-9 3/4	0'-9 5/8	G5
K	32'-0	31'-10	31'-8	31'-8	31'-8	31'-6	31'-6	31'-6	31'-6	K
P	38'-1 5/8	35'-0 1/2	31'-11 1/2	28'-10 3/8	25'-9 1/4	22'-8 1/8	19'-7	16'-5 7/8	13'-4 3/4	P
R1	40'-1	36'-10	33'-7	30'-4	27'-1	23'-10	20'-7	17'-4	14'-1	R1
R2	27'-0 1/8	24'-9 1/4	22'-6 1/2	20'-3 3/4	18'-0 7/8	15'-10 1/8	13'-7 3/8	11'-4 3/4	9'-2	R2
T	1'-1	1'-1	1'-1	1'-1	1'-1	1'-1	1'-1	1'-1	1'-1	T
U	1'-0	0'-11	0'-10	0'-10	0'-10	0'-9	0'-9	0'-9	0'-9	U
V	1'-0	0'-11	0'-10	0'-10	0'-10	0'-9	0'-9	0'-9	0'-9	V
W	5'-0	4'-9	4'-6	4'-3	4'-0	3'-9	3'-6	3'-6	3'-6	W

NOTES:

1. SEE SHEET TRRCB G1-12 FOR GENERAL INFORMATION, SPECIFICATIONS, AND DESIGN STRESSES.
2. SEE SHEET TRH 0-2-12 THRU TRH 0-4-12 FOR LOCATION OF CERTAIN DIMENSIONS TABULATED.
3. SEE SHEET TRH 0-5-12 FOR HEADWALL NOTES.

LATEST REVISION DATE

APPROVED BY BRIDGE ENGINEER

IOWA DOT Highway Division

STANDARD DESIGN

TRIPLE REINFORCED CONCRETE BOX CULVERTS

APRIL, 2012

FLARED WING HEADWALLS

0° SKEW

TRH 0-1-12

ENGLISHLRFDSIGNEDTRIPLECULVERTS.DGN - TRH 0-1-12 - THIS SHEET ISSUED 04-12.

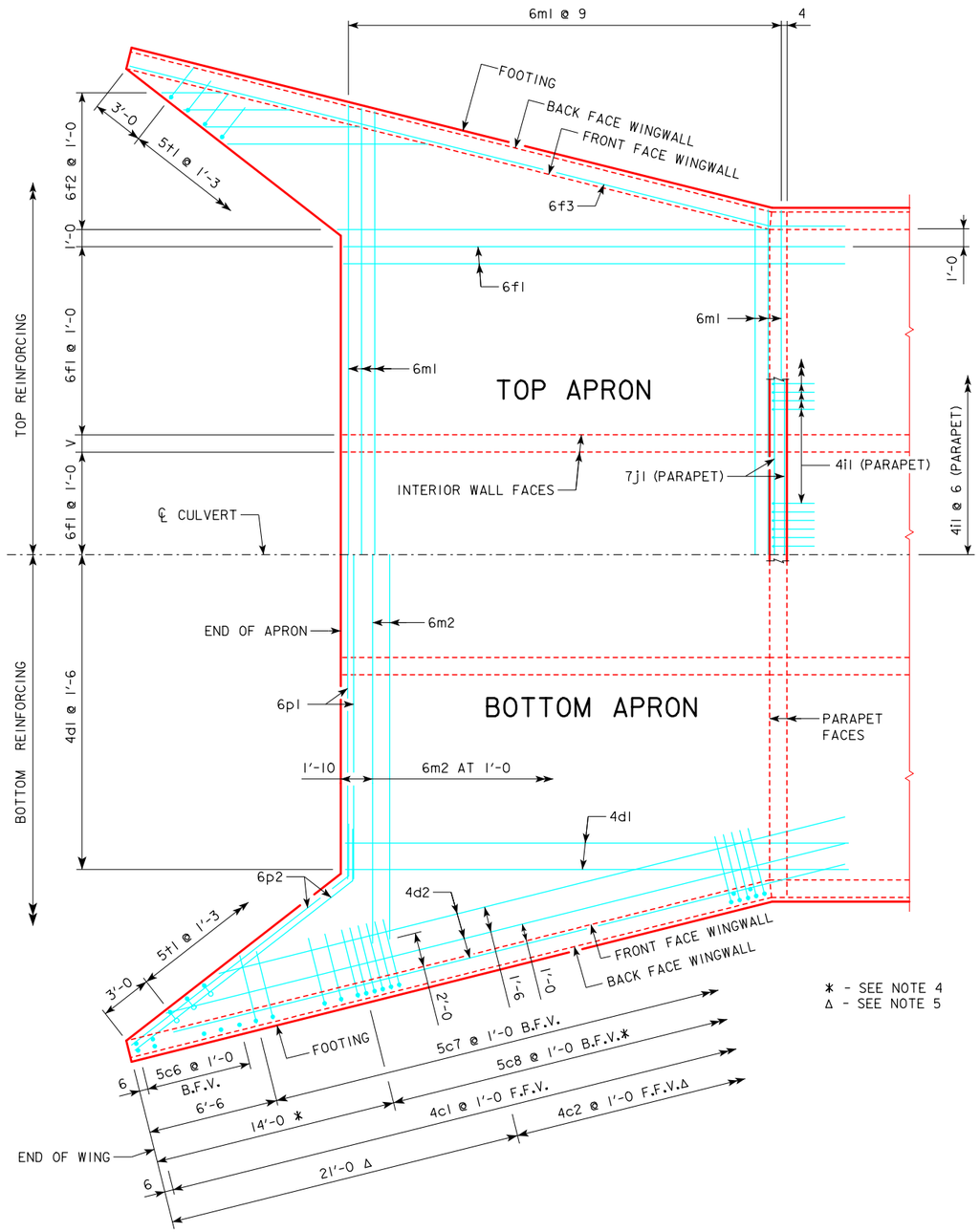

PLAN VIEW - TOP & BOTTOM OF APRON REINFORCING BARS

NOTES:

1. BAR SPACINGS AND POSITIONS SHOWN ARE SIMILAR FOR ALL SIZES OF HEADWALLS IN THIS STANDARD.
2. WINGWALL BARS CONSISTENTLY REFERENCED FROM END OF WING FOR ALL HEADWALLS.
3. TOP TRANSVERSE FLOOR BARS ARE 4" FROM THE BACK OF THE PARAPET FOR ALL HEADWALLS.
4. THERE ARE NO 5c8 BARS IN THE 4' & 5' HEIGHT HEADWALLS.
5. 4c2 BARS USED ONLY IN THE 9', 10', 11' & 12' HEIGHT HEADWALLS.
6. FOR DIMENSION TABLE SEE SHEET TRH 0-1-12.
7. FOR REINFORCING IN CURTAIN WALL SEE CURTAIN WALL DETAILS SHEET TRH 0-3-12.

LATEST REVISION DATE

APPROVED BY BRIDGE ENGINEER

IOWA DOT Highway Division

STANDARD DESIGN

TRIPLE REINFORCED CONCRETE BOX CULVERTS

APRIL, 2012

FLARED WING HEADWALLS

0° SKEW

TRH 0-2-12

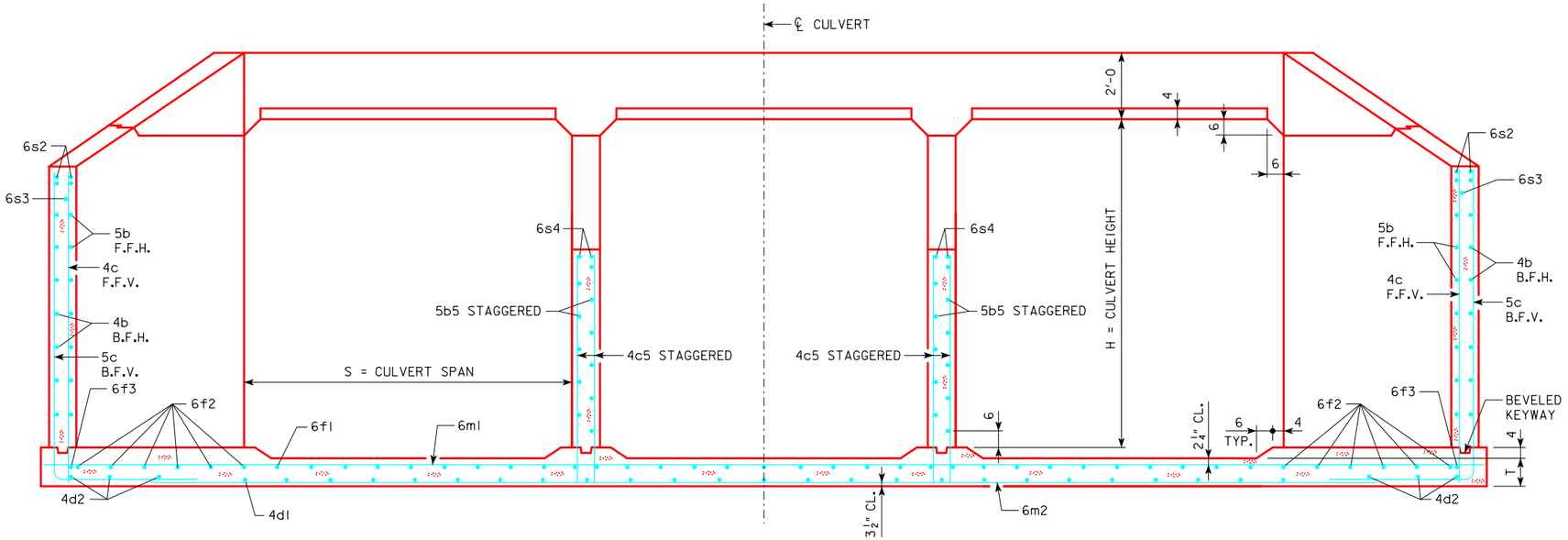

TYPICAL SECTION - NEAR CENTER OF APRON

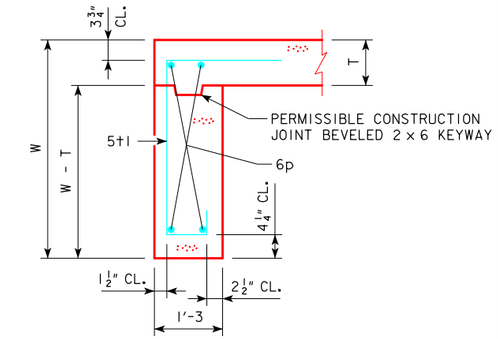

SECTION THRU CURTAIN WALL

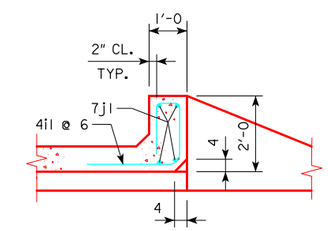

SECTION THRU PARAPET

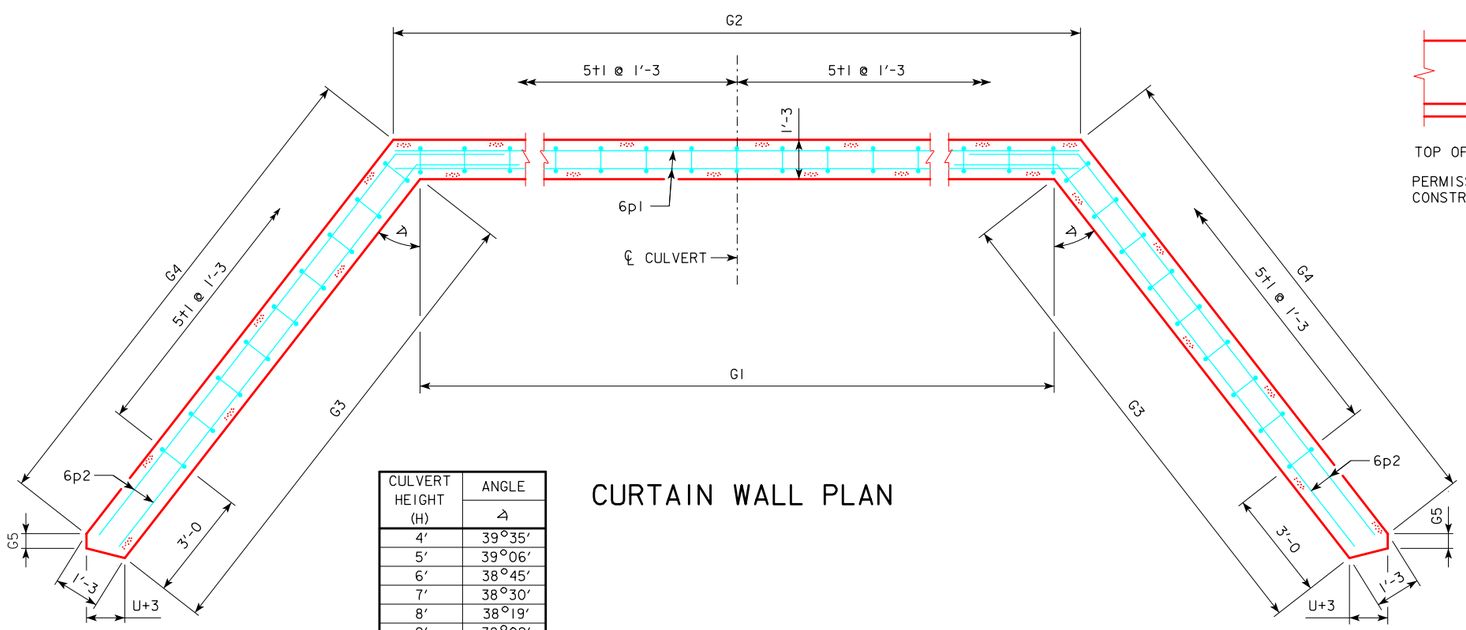

CURTAIN WALL PLAN

CULVERT HEIGHT (H)	ANGLE ∆
4'	39°35'
5'	39°06'
6'	38°45'
7'	38°30'
8'	38°19'
9'	38°09'
10'	38°02'
11'	37°56'
12'	37°51'

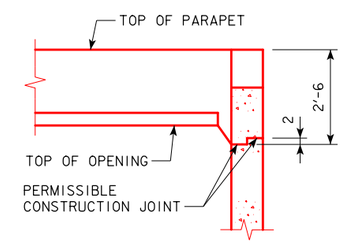

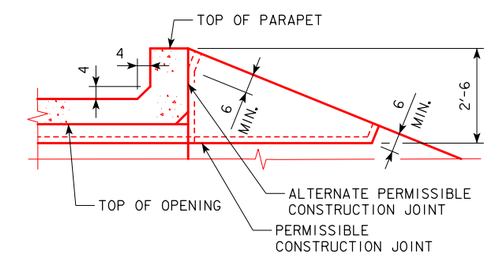

TOP OF WINGWALL DETAILS

NOTES:

1. SEE SHEET TRRCB G1-12 FOR GENERAL INFORMATION, SPECIFICATIONS, AND DESIGN STRESSES.
2. FOR DIMENSION TABLE SEE SHEET TRH 0-1-12.

LATEST REVISION DATE

APPROVED BY BRIDGE ENGINEER

IOWA DOT Highway Division

STANDARD DESIGN

TRIPLE REINFORCED CONCRETE BOX CULVERTS

APRIL, 2012

FLARED WING HEADWALLS

0° SKEW

TRH 0-3-12

ENGLISHLRFDSIGNEDTRIPLECULVERTS.DGN - TRH 0-3-12 - THIS SHEET ISSUED 04-12.

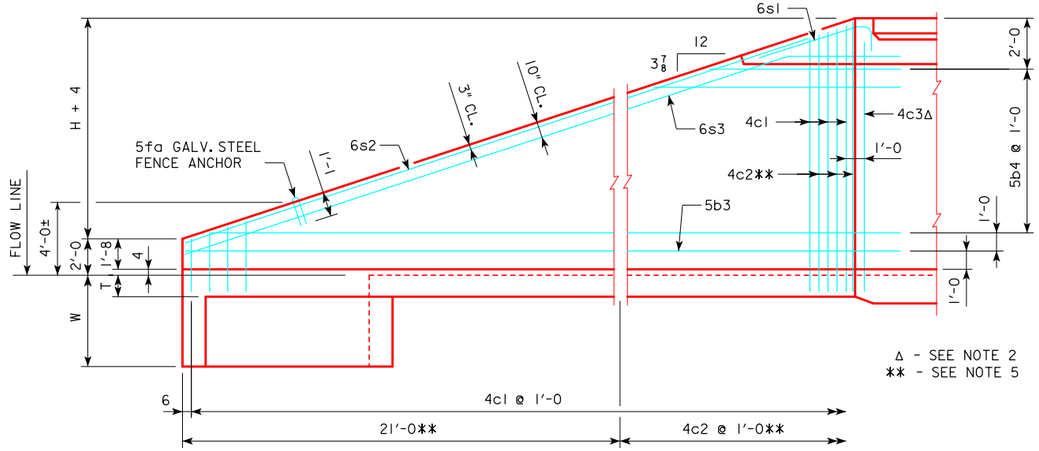

TYPICAL VIEW - FRONT FACE REINFORCING

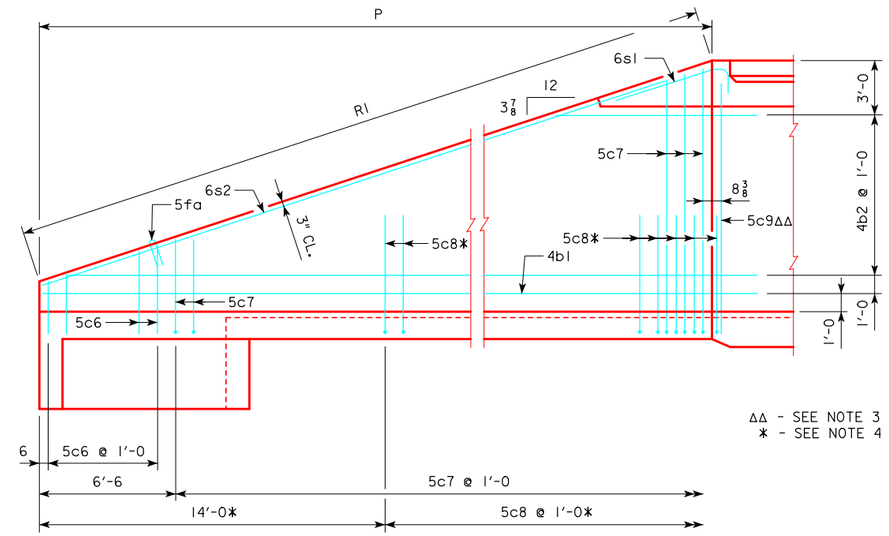

TYPICAL VIEW - BACK FACE REINFORCING

CULVERT HEIGHT (H)	SLOPE y INCHES
4'	$4\frac{1}{8}$
5'	$4\frac{1}{2}$
6'	$4\frac{3}{4}$
7'	$4\frac{15}{16}$
8'	$5\frac{1}{16}$
9'	$5\frac{1}{8}$
10'	$5\frac{1}{4}$
11'	$5\frac{5}{16}$
12'	$5\frac{3}{8}$

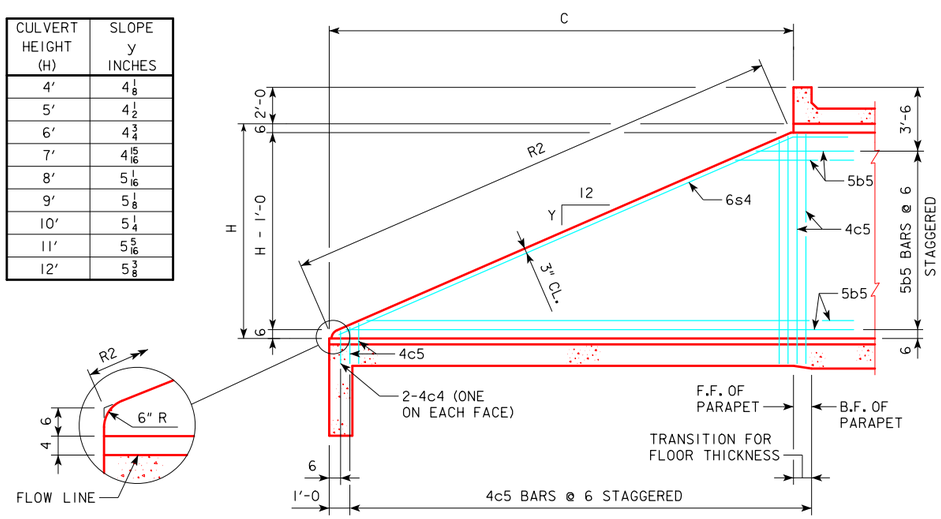

TYPICAL VIEW - INTERIOR WALL

NOTES:

1. BAR SPACING AND POSITIONS SHOWN ARE SIMILAR FOR ALL SIZES OF HEADWALL IN THIS STANDARD.
2. TWO 4c3 BARS FOR 4', 5', 11' & 12' HEIGHT HEADWALLS. ONE 4c3 BAR FOR 6' THRU 10' HEIGHT HEADWALLS.
3. TWO 5c9 BARS FOR 4', 5', 11' & 12' HEIGHT HEADWALLS. ONE 5c9 BAR FOR 6' THRU 10' HEIGHT HEADWALLS.
4. NOT APPLICABLE FOR 4' & 5' HEIGHT HEADWALLS.
5. NOT APPLICABLE FOR 4' THRU 8' HEIGHT HEADWALLS.
6. FOR DIMENSION TABLE SEE SHEET TRH 0-1-12.

07-2016
LATEST REVISION DATE

APPROVED BY BRIDGE ENGINEER

IOWA DOT Highway Division

STANDARD DESIGN

TRIPLE REINFORCED CONCRETE BOX CULVERTS

APRIL, 2012

FLARED WING HEADWALLS

0° SKEW

TRH 0-4-12

REVISED 05-13 - CHANGED 19'-0** DIMENSION TO 21'-0** IN TYPICAL VIEW - FRONT FACE REINFORCING DETAIL.
REVISED 07-2016 - REMOVED 1'-8 VERTICAL DIMENSION FROM 6s3 BAR TO TOP OF PARAPET. THIS ALLOWS FOR THIS VARIANCE IN LOCATION IS CAUSED BY THE DIFFERING WING SIZES OF DIFFERENT SIZED R.C.B. CULVERTS.
ENGLISHLRFDSIGNEDTRIPLECULVERTS.DGN - TRH 0-4-12 - THIS SHEET ISSUED 04-12.

BILL OF REINFORCING FOR ONE HEADWALL 0° SKEW CULVERT SPAN x CULVERT HEIGHT

BAR	LOCATION	SHAPE	12′ x 12′ NO.	12′ x 12′ LENGTH	12′ x 12′ WT.	12′ x 11′ NO.	12′ x 11′ LENGTH	12′ x 11′ WT.	12′ x 10′ NO.	12′ x 10′ LENGTH	12′ x 10′ WT.	12′ x 9′ NO.	12′ x 9′ LENGTH	12′ x 9′ WT.	12′ x 8′ NO.	12′ x 8′ LENGTH	12′ x 8′ WT.	12′ x 7′ NO.	12′ x 7′ LENGTH	12′ x 7′ WT.	12′ x 6′ NO.	12′ x 6′ LENGTH	12′ x 6′ WT.	12′ x 5′ NO.	12′ x 5′ LENGTH	12′ x 5′ WT.	12′ x 4′ NO.	12′ x 4′ LENGTH	12′ x 4′ WT.	10′ x 12′ NO.	10′ x 12′ LENGTH	10′ x 12′ WT.	10′ x 11′ NO.	10′ x 11′ LENGTH	10′ x 11′ WT.	10′ x 10′ NO.	10′ x 10′ LENGTH	10′ x 10′ WT.	BAR
5fa	FENCE ANCHOR (GALV.)		2	2′-10	6	2	2′-10	6	2	2′-10	6	2	2′-10	6	2	2′-10	6	2	2′-10	6	2	2′-10	6	2	2′-10	6	2	2′-10	6	2	2′-10	6	2	2′-10	6	2	2′-10	6	5fa
4b1	WINGWALL, B.F.H.		2	40′-10	58	2	37′-9	50	2	34′-8	46	2	31′-7	42	2	28′-6	38	2	25′-5	34	2	22′-4	30	2	19′-3	26	2	16′-2	22	2	40′-10	58	2	37′-9	50	2	34′-8	46	4b1
4b2	WINGWALL, B.F.H.		20 VAR.	2 EACH 11′-7 TO 39′-5	341	18 VAR.	2 EACH 11′-7 TO 36′-4	288	16 VAR.	2 EACH 11′-7 TO 33′-3	240	14 VAR.	2 EACH 11′-7 TO 30′-2	195	12 VAR.	2 EACH 11′-7 TO 27′-1	155	10 VAR.	2 EACH 11′-7 TO 24′-0	119	8 VAR.	2 EACH 11′-7 TO 20′-11	87	6 VAR.	2 EACH 11′-7 TO 17′-10	59	4 VAR.	2 EACH 11′-7 TO 14′-9	35	20 VAR.	2 EACH 11′-7 TO 39′-5	341	18 VAR.	2 EACH 11′-7 TO 36′-4	288	16 VAR.	2 EACH 11′-7 TO 33′-3	240	4b2
5b3	WINGWALL, F.F.H.		2	40′-11	90	2	37′-10	79	2	34′-9	72	2	31′-8	66	2	28′-7	60	2	25′-5	53	2	22′-4	47	2	19′-3	40	2	16′-2	34	2	40′-11	90	2	37′-10	79	2	34′-9	72	5b3
5b4	WINGWALL, F.F.H.		22 VAR.	2 EACH 8′-6 TO 39′-6	551	20 VAR.	2 EACH 8′-6 TO 36′-5	468	18 VAR.	2 EACH 8′-7 TO 33′-4	393	16 VAR.	2 EACH 8′-7 TO 30′-3	324	14 VAR.	2 EACH 8′-7 TO 27′-2	261	12 VAR.	2 EACH 8′-7 TO 24′-0	204	10 VAR.	2 EACH 8′-7 TO 20′-11	154	8 VAR.	2 EACH 8′-7 TO 17′-10	110	6 VAR.	2 EACH 8′-7 TO 14′-9	73	22 VAR.	2 EACH 8′-6 TO 39′-6	551	20 VAR.	2 EACH 8′-6 TO 36′-5	468	18 VAR.	2 EACH 8′-7 TO 33′-4	393	5b4
5b5	INTERIOR WALLS, BOTH F.H.		42 VAR.	2 EACH 4′-10 TO 27′-4	705	38 VAR.	2 EACH 4′-11 TO 25′-4	599	34 VAR.	2 EACH 4′-11 TO 23′-3	499	30 VAR.	2 EACH 4′-11 TO 21′-3	409	26 VAR.	2 EACH 5′-0 TO 19′-3	329	22 VAR.	2 EACH 5′-1 TO 17′-3	256	18 VAR.	2 EACH 5′-1 TO 15′-3	191	14 VAR.	2 EACH 5′-3 TO 13′-3	135	10 VAR.	2 EACH 5′-5 TO 11′-2	86	42 VAR.	2 EACH 4′-10 TO 27′-4	705	38 VAR.	2 EACH 4′-11 TO 25′-4	599	34 VAR.	2 EACH 4′-11 TO 23′-3	499	5b5
4c1	WINGWALL, F.F.V.		76 VAR.	2 EACH 2′-10 TO 14′-10	448	70 VAR.	2 EACH 2′-10 TO 13′-10	390	64 VAR.	2 EACH 2′-10 TO 12′-11	337	58 VAR.	2 EACH 2′-10 TO 11′-11	286	52 VAR.	2 EACH 2′-10 TO 10′-11	239	46 VAR.	2 EACH 2′-10 TO 10′-0	197	40 VAR.	2 EACH 2′-10 TO 9′-0	158	32 VAR.	2 EACH 2′-10 TO 7′-9	113	26 VAR.	2 EACH 2′-10 TO 6′-9	83	76 VAR.	2 EACH 2′-9 TO 14′-9	444	70 VAR.	2 EACH 2′-9 TO 13′-9	386	64 VAR.	2 EACH 2′-9 TO 12′-10	333	4c1
4c2	WINGWALL, F.F.V.		36 VAR.	2 EACH 9′-6 TO 15′-0	295	30 VAR.	2 EACH 9′-6 TO 14′-0	235	24 VAR.	2 EACH 9′-6 TO 13′-1	181	18 VAR.	2 EACH 9′-6 TO 12′-1	130	---	---	---	---	---	---	---	---	---	---	---	---	---	---	---	36 VAR.	2 EACH 9′-5 TO 14′-11	293	30 VAR.	2 EACH 9′-5 TO 13′-11	234	24 VAR.	2 EACH 9′-5 TO 13′-0	180	4c2
4c3	WINGWALL, F.F.V.		4	13′-9	37	4	12′-9	34	2	11′-9	16	2	10′-9	14	2	9′-9	13	2	8′-9	12	2	7′-9	10	4	6′-9	18	4	5′-9	15	4	13′-8	37	4	12′-8	34	2	11′-8	16	4c3
4c4	INTERIOR WALLS, BOTH F.V.		4	1′-9	5	4	1′-9	5	4	1′-9	5	4	1′-9	5	4	1′-9	5	4	1′-9	5	4	1′-9	5	4	1′-9	5	4	1′-8	4	4	1′-8	4	4	1′-8	4	4	1′-8	4	4c4
4c5	INTERIOR WALLS, BOTH F.V.		100 VAR.	2 EACH 2′-0 TO 12′-11	498	92 VAR.	2 EACH 2′-0 TO 11′-11	428	84 VAR.	2 EACH 2′-0 TO 10′-11	362	76 VAR.	2 EACH 1′-11 TO 9′-11	300	68 VAR.	2 EACH 1′-11 TO 8′-11	246	60 VAR.	2 EACH 1′-11 TO 7′-10	195	52 VAR.	2 EACH 1′-11 TO 6′-10	152	44 VAR.	2 EACH 1′-11 TO 5′-10	114	36 VAR.	2 EACH 1′-11 TO 4′-10	81	100 VAR.	2 EACH 1′-11 TO 12′-10	493	92 VAR.	2 EACH 1′-11 TO 11′-10	423	84 VAR.	2 EACH 1′-11 TO 10′-10	358	4c5
5c6	WINGWALL, B.F.V.		12 VAR.	2 EACH 2′-10 TO 4′-6	46	12 VAR.	2 EACH 2′-10 TO 4′-6	46	12 VAR.	2 EACH 2′-10 TO 4′-6	46	12 VAR.	2 EACH 2′-10 TO 4′-6	46	12 VAR.	2 EACH 2′-10 TO 4′-6	46	12 VAR.	2 EACH 2′-10 TO 4′-6	46	12 VAR.	2 EACH 2′-10 TO 4′-6	46	12 VAR.	2 EACH 2′-10 TO 4′-6	46	12 VAR.	2 EACH 2′-10 TO 4′-6	46	12 VAR.	2 EACH 2′-9 TO 4′-5	45	12 VAR.	2 EACH 2′-9 TO 4′-5	45	12 VAR.	2 EACH 2′-9 TO 4′-5	45	5c6
5c7	WINGWALL, B.F.V.		64 VAR.	2 EACH 8′-10 TO 18′-10	923	58 VAR.	2 EACH 8′-10 TO 17′-10	807	52 VAR.	2 EACH 8′-10 TO 16′-11	698	46 VAR.	2 EACH 8′-10 TO 15′-11	594	40 VAR.	2 EACH 8′-10 TO 14′-11	495	34 VAR.	2 EACH 8′-10 TO 14′-0	405	28 VAR.	2 EACH 8′-10 TO 13′-0	319	20 VAR.	2 EACH 8′-10 TO 11′-9	215	14 VAR.	2 EACH 8′-10 TO 10′-9	143	64 VAR.	2 EACH 8′-9 TO 18′-9	918	58 VAR.	2 EACH 8′-9 TO 17′-9	802	52 VAR.	2 EACH 8′-9 TO 16′-10	694	5c7
5c8	WINGWALL, B.F.V.		50	10′-6	548	44	10′-6	482	38	10′-6	416	32	10′-6	350	26	10′-6	285	20	10′-6	219	14	10′-6	153	---	---	---	---	---	---	50	10′-6	548	44	10′-6	482	38	10′-6	416	5c8
5c9	WINGWALL, B.F.V.		4	17′-9	74	4	16′-9	70	2	15′-9	33	2	14′-9	31	2	13′-9	29	2	12′-9	27	2	11′-9	25	4	10′-9	45	4	9′-9	41	4	17′-8	74	4	16′-8	70	2	15′-8	33	5c9
4d1	APRON, LONGIT., BOTT.		25	27′-6	459	25	25′-6	426	25	23′-6	392	25	21′-6	359	25	19′-6	326	25	17′-6	292	25	15′-6	259	25	13′-6	225	25	11′-6	192	21	27′-6	386	21	25′-6	358	21	23′-6	330	4d1
4d2	APRON, LONGIT., BOTT.		6	35′-9	143	6	32′-8	131	6	29′-8	119	6	26′-7	107	6	23′-6	94	6	20′-6	82	6	17′-5	70	6	14′-5	58	6	11′-6	46	6	35′-9	143	6	32′-8	131	6	29′-8	119	4d2
6f1	APRON, LONGIT., TOP		37	27′-6	1528	37	25′-6	1417	37	23′-6	1306	37	21′-6	1195	37	19′-6	1084	37	17′-6	973	37	15′-6	861	37	13′-6	750	37	11′-6	639	31	27′-6	1280	31	25′-6	1187	31	23′-6	1094	6f1
6f2	APRON, LONGIT., TOP		16 VAR.	2 EACH 5′-10 TO 24′-10	368	16 VAR.	2 EACH 3′-10 TO 22′-10	320	14 VAR.	2 EACH 4′-6 TO 20′-10	266	12 VAR.	2 EACH 5′-3 TO 18′-10	217	10 VAR.	2 EACH 5′-11 TO 16′-10	171	10 VAR.	2 EACH 3′-11 TO 14′-10	141	8 VAR.	2 EACH 4′-7 TO 12′-10	105	6 VAR.	2 EACH 5′-4 TO 10′-10	73	4 VAR.	2 EACH 6′-1 TO 8′-10	45	16 VAR.	2 EACH 5′-10 TO 24′-10	368	16 VAR.	2 EACH 3′-10 TO 22′-10	320	14 VAR.	2 EACH 4′-6 TO 20′-10	266	6f2
6f3	APRON, LONGIT., TOP		2	40′-11	130	2	37′-10	114	2	34′-9	104	2	31′-8	95	2	28′-7	86	2	25′-5	76	2	22′-4	67	2	19′-3	58	2	16′-2	49	2	40′-11	130	2	37′-10	114	2	34′-9	104	6f3
4i1	PARAPET, VERTICAL		77	6′-1	313	75	6′-1	305	75	6′-1	305	75	6′-1	305	75	6′-1	305	75	6′-1	305	75	6′-1	305	75	6′-1	305	75	6′-1	305	65	6′-1	264	63	6′-1	256	63	6′-1	256	4i1
7ji	PARAPET, HORIZONTAL		4	39′-8	324	4	39′-4	322	4	39′-0	319	4	39′-0	319	4	39′-0	319	4	38′-8	316	4	38′-8	316	4	38′-8	316	4	38′-8	316	4	33′-8	275	4	33′-4	273	4	33′-0	270	7ji
6m1	APRON, TRANS., TOP		34 VAR.	39′-10 TO 52′-3	2463	31 VAR.	39′-6 TO 50′-9	2199	29 VAR.	39′-2 TO 49′-8	2023	26 VAR.	39′-2 TO 48′-7	1791	23 VAR.	39′-2 TO 47′-5	1563	21 VAR.	38′-10 TO 46′-4	1401	18 VAR.	38′-10 TO 45′-3	1184	15 VAR.	38′-10 TO 44′-1	971	13 VAR.	38′-10 TO 43′-4	833	34 VAR.	33′-10 TO 46′-3	2102	31 VAR.	33′-6 TO 44′-9	1866	29 VAR.	33′-2 TO 43′-8	1707	6m1
6m2	APRON, TRANS., BOTT.		24 VAR.	33′-9 TO 45′-3	1461	22 VAR.	33′-7 TO 44′-1	1313	20 VAR.	33′-5 TO 42′-11	1167	18 VAR.	33′-5 TO 41′-11	1032	16 VAR.	33′-5 TO 40′-11	900	14 VAR.	33′-3 TO 39′-9	768	12 VAR.	33′-3 TO 38′-9	649	10 VAR.	33′-3 TO 37′-9	533	8 VAR.	33′-3 TO 36′-9	421	24 VAR.	27′-9 TO 39′-3	1208	22 VAR.	27′-7 TO 38′-1	1085	20 VAR.	27′-5 TO 36′-11	966	6m2
6p1	CURTAIN, HORIZONTAL		4	38′-3	230	4	38′-1	229	4	37′-11	228	4	37′-11	228	4	37′-11	228	4	37′-9	227	4	37′-9	227	4	37′-9	227	4	37′-9	227	4	32′-3	194	4	32′-1	193	4	31′-11	192	6p1
6p2	CURTAIN, HORIZONTAL		8	18′-7	223	8	17′-4	208	8	16′-1	193	8	14′-10	178	8	13′-7	163	8	12′-4	148	8	11′-1	133	8	9′-10	118	8	8′-7	103	8	18′-7	223	8	17′-4	208	8	16′-1	193	6p2
6s1	WING SLOPE, BOTH F.		4	7′-8	46	4	7′-8	46	4	7′-8	46	4	7′-8	46	4	7′-8	46	4	7′-8	46	4	7′-8	46	4	7′-8	46	4	7′-8	46	4	7′-8	46	4	7′-8	46	4	7′-8	46	6s1
6s2	WING SLOPE, BOTH F.		4	37′-6	225	4	34′-3	206	4	31′-0	186	4	27′-9	167	4	24′-6	147	4	21′-3	128	4	18′-0	108	4	14′-9	89	4	11′-6	69	4	37′-6	225	4	34′-3	206	4	31′-0	186	6s2
6s3	WING SLOPE, F.F.		2	42′-9	135	2	39′-6	119	2	36′-3	109	2	33′-0	99	2	29′-9	89	2	26′-6	80	2	23′-3	70	2	20′-0	60	2	16′-9	50	2	42′-9	135	2	39′-6	119	2	36′-3	109	6s3
6s4	INTERIOR WALLS, BOTH F.		4	29′-10	179	4	27′-7	166	4	25′-4	152	4	23′-1	139	4	20′-11	126	4	18′-8	112	4	16′-5	99	4	14′-2	85	4	11′-11	72	4	29′-10	179	4	27′-7	166	4	25′-4	152	6s4
5t1	CURTAIN, VERTICAL		51	8′-0	426	49	7′-9	396	47	7′-6	368	45	7′-3	340	43	7′-0	314	41	6′-9	289	39	6′-6	264	37	6′-6	251	35	6′-6	237	47	8′-0	392	45	7′-9	364	43	7′-6	336	5t1
ESTIMATED QUANTITIES ONE HEADWALL	REINF. STEEL		13,278 LB			11,904 LB			10,633 LB			9415 LB			8168 LB			7162 LB			6146 LB			5097 LB			4319 LB			12,157 LB			10,862 LB			9661 LB		
	CONCRETE	PARAPET Δ	3.8	112.5 CY		3.7	97.2 CY		3.6	83.7 CY		3.6	73.7 CY		3.6	63.1 CY		3.5	53.6 CY		3.5	45.5 CY		3.5	38.6 CY		3.5	32.1 CY		3.3	101.0 CY		3.2	86.6 CY		3.1	74.0 CY		
		WINGWALLS	34.0			26.5			20.4			16.9			13.7			9.7			7.4			5.4			3.7			34.0			26.5			20.4		
		FOOTING ✱	74.7			67.0			59.7			53.2			45.8			40.4			34.6			29.7			24.9			63.7			56.9			50.5		

Δ INCLUDES TOP OF WINGWALL QUANTITIES.
✱ ASSUMES APRON AND FLOOR ARE EQUAL THICKNESS, ADJUST CONCRETE QUANTITIES FOR TRANSITION WHERE APRON AND FLOOR THICKNESS ARE NOT EQUAL.

NOTE:
WEIGHT OF BARS OVER 40′-0 LONG INCLUDES AN ALLOWANCE OF 2′-3 FOR LAP. LENGTHS SHOWN FOR BARS OVER 40′-0 LONG DO NOT INCLUDE LAP.

BENT BAR DETAILS

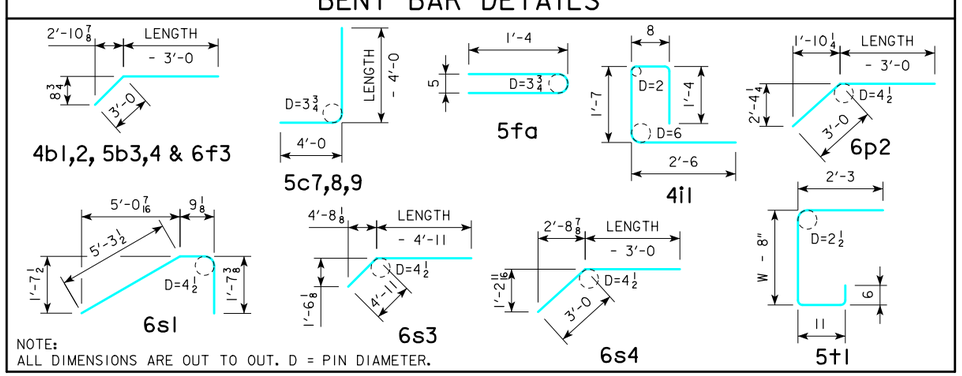

NOTE:
ALL DIMENSIONS ARE OUT TO OUT. D = PIN DIAMETER.

HEADWALL NOTES:

1. SEE DRAWING TRRCB G1-12 FOR GENERAL INFORMATION, SPECIFICATIONS, AND DESIGN STRESSES.
2. THIS HEADWALL IS BASED ON A 3:1 SLOPE NORMAL TO CENTERLINE OF ROADWAY.
3. THE SIDES OF THE FOOTING ARE TO BE FORMED TO INSURE CORRECT LINE AND GRADE.
4. ALL SLAB AND FLOOR REINFORCING STEEL IS TO BE SUPPORTED BY BAR CHAIRS AT INTERVALS OF NOT MORE THAN 3′-0 IN EITHER DIRECTION AS OUTLINED IN THE STANDARD SPECIFICATIONS.
5. CLEAR DISTANCE FROM FACE OF CONCRETE TO NEAR REINFORCING BAR IS TO BE 2″ UNLESS OTHERWISE NOTED OR SHOWN. CLEARANCE TO THE BOTTOM ENDS OF VERTICAL BARS SHALL BE 3 INCHES.
6. CONCRETE QUANTITIES ARE ESTIMATED FROM BACK OF PARAPET.
7. HORIZONTAL TAILS OF BARS "b" & "s" ESTIMATED TO EXTEND 2′-0 BEYOND BACK OF PARAPET (INTO END OF BARREL). LONGITUDINAL BARS "d", "6f1", AND "6f3" ESTIMATED TO PROJECT INTO END SECTION OF BARREL A MINIMUM OF 2′-0 BEYOND BACK OF PARAPET.
8. THE "LENGTH" COLUMN REFLECTS TOTAL NUMBER OF FEET NECESSARY TO MEET THESE REQUIREMENTS.

LATEST REVISION DATE

APPROVED BY BRIDGE ENGINEER

IOWA DOT Highway Division

STANDARD DESIGN

TRIPLE REINFORCED CONCRETE BOX CULVERTS

APRIL, 2012

FLARED WING HEADWALLS

0° SKEW

TRH 0-5-12

ENGLISHLRFDSIGNEDTRIPLECULVERTS.DGN - TRH 0-5-12 - THIS SHEET ISSUED 04-12.

BILL OF REINFORCING FOR ONE HEADWALL 0° SKEW CULVERT SPAN x CULVERT HEIGHT

BAR	LOCATION	SHAPE	10′ x 9′ NO.	10′ x 9′ LENGTH	10′ x 9′ WT.	10′ x 8′ NO.	10′ x 8′ LENGTH	10′ x 8′ WT.	10′ x 7′ NO.	10′ x 7′ LENGTH	10′ x 7′ WT.	10′ x 6′ NO.	10′ x 6′ LENGTH	10′ x 6′ WT.	10′ x 5′ NO.	10′ x 5′ LENGTH	10′ x 5′ WT.	10′ x 4′ NO.	10′ x 4′ LENGTH	10′ x 4′ WT.	BAR
5fa	FENCE ANCHOR (GALV.)		2	2′-10	6	2	2′-10	6	2	2′-10	6	2	2′-10	6	2	2′-10	6	2	2′-10	6	5fa
4b1	WINGWALL, B.F.H.		2	31′-7	42	2	28′-6	38	2	25′-5	34	2	22′-4	30	2	19′-3	26	2	16′-2	22	4b1
4b2	WINGWALL, B.F.H.		14 VAR.	2 EACH 11′-7 TO 30′-2	195	12 VAR.	2 EACH 11′-7 TO 27′-1	155	10 VAR.	2 EACH 11′-7 TO 24′-0	119	8 VAR.	2 EACH 11′-7 TO 20′-11	87	6 VAR.	2 EACH 11′-7 TO 17′-10	59	4 VAR.	2 EACH 11′-7 TO 14′-9	35	4b2
5b3	WINGWALL, F.F.H.		2	31′-8	66	2	28′-7	60	2	25′-5	53	2	22′-4	47	2	19′-3	40	2	16′-2	34	5b3
5b4	WINGWALL, F.F.H.		16 VAR.	2 EACH 8′-7 TO 30′-3	324	14 VAR.	2 EACH 8′-7 TO 27′-2	261	12 VAR.	2 EACH 8′-7 TO 24′-0	204	10 VAR.	2 EACH 8′-7 TO 20′-11	154	8 VAR.	2 EACH 8′-7 TO 17′-10	110	6 VAR.	2 EACH 8′-7 TO 14′-9	73	5b4
5b5	INTERIOR WALLS, BOTH F.H.		30 VAR.	2 EACH 4′-11 TO 21′-3	409	26 VAR.	2 EACH 5′-0 TO 19′-3	329	22 VAR.	2 EACH 5′-1 TO 17′-3	256	18 VAR.	2 EACH 5′-1 TO 15′-3	191	14 VAR.	2 EACH 5′-3 TO 13′-3	135	10 VAR.	2 EACH 5′-5 TO 11′-2	86	5b5
4c1	WINGWALL, F.F.V.		58 VAR.	2 EACH 2′-9 TO 11′-10	283	52 VAR.	2 EACH 2′-9 TO 10′-10	236	46 VAR.	2 EACH 2′-9 TO 9′-11	195	40 VAR.	2 EACH 2′-9 TO 8′-11	156	32 VAR.	2 EACH 2′-9 TO 7′-8	111	26 VAR.	2 EACH 2′-9 TO 6′-8	82	4c1
4c2	WINGWALL, F.F.V.		18 VAR.	2 EACH 9′-5 TO 12′-0	129	---	---	---	---	---	---	---	---	---	---	---	---	---	---	---	4c2
4c3	WINGWALL, F.F.V.		2	10′-8	14	2	9′-8	13	2	8′-8	12	2	7′-8	10	4	6′-8	18	4	5′-8	15	4c3
4c4	INTERIOR WALLS, BOTH F.V.		4	1′-8	4	4	1′-8	4	4	1′-8	4	4	1′-8	4	4	1′-8	4	4	1′-7	4	4c4
4c5	INTERIOR WALLS, BOTH F.V.		76 VAR.	2 EACH 1′-10 TO 9′-10	296	68 VAR.	2 EACH 1′-10 TO 8′-10	242	60 VAR.	2 EACH 1′-10 TO 7′-9	192	52 VAR.	2 EACH 1′-10 TO 6′-9	149	44 VAR.	2 EACH 1′-10 TO 5′-9	111	36 VAR.	2 EACH 1′-10 TO 4′-9	79	4c5
5c6	WINGWALL, B.F.V.		12 VAR.	2 EACH 2′-9 TO 4′-5	45	12 VAR.	2 EACH 2′-9 TO 4′-5	45	12 VAR.	2 EACH 2′-9 TO 4′-5	45	12 VAR.	2 EACH 2′-9 TO 4′-5	45	12 VAR.	2 EACH 2′-9 TO 4′-5	45	12 VAR.	2 EACH 2′-9 TO 4′-5	45	5c6
5c7	WINGWALL, B.F.V.		46 VAR.	2 EACH 8′-9 TO 15′-10	590	40 VAR.	2 EACH 8′-9 TO 14′-10	492	34 VAR.	2 EACH 8′-9 TO 13′-11	402	28 VAR.	2 EACH 8′-9 TO 12′-11	316	20 VAR.	2 EACH 8′-9 TO 11′-8	213	14 VAR.	2 EACH 8′-9 TO 10′-8	142	5c7
5c8	WINGWALL, B.F.V.		32	10′-6	350	26	10′-6	285	20	10′-6	219	14	10′-6	153	---	---	---	---	---	---	5c8
5c9	WINGWALL, B.F.V.		2	14′-8	31	2	13′-8	29	2	12′-8	26	2	11′-8	24	4	10′-8	45	4	9′-8	40	5c9
4d1	APRON, LONGIT., BOTT.		21	21′-6	302	21	19′-6	274	21	17′-6	245	21	15′-6	217	21	13′-6	189	21	11′-6	161	4d1
4d2	APRON, LONGIT., BOTT.		6	26′-7	107	6	23′-6	94	6	20′-6	82	6	17′-5	70	6	14′-5	58	6	11′-6	46	4d2
6f1	APRON, LONGIT., TOP		31	21′-6	1001	31	19′-6	908	31	17′-6	815	31	15′-6	722	31	13′-6	629	31	11′-6	535	6f1
6f2	APRON, LONGIT., TOP		12 VAR.	2 EACH 5′-3 TO 18′-10	217	10 VAR.	2 EACH 5′-11 TO 16′-10	171	10 VAR.	2 EACH 3′-11 TO 14′-10	141	8 VAR.	2 EACH 4′-7 TO 12′-10	105	6 VAR.	2 EACH 5′-4 TO 10′-10	73	4 VAR.	2 EACH 6′-1 TO 8′-10	45	6f2
6f3	APRON, LONGIT., TOP		2	31′-8	95	2	28′-7	86	2	25′-5	76	2	22′-4	67	2	19′-3	58	2	16′-2	49	6f3
4i1	PARAPET, VERTICAL		63	6′-1	256	63	6′-1	256	63	6′-1	256	63	6′-1	256	63	6′-1	256	63	6′-1	256	4i1
7j1	PARAPET, HORIZONTAL		4	33′-0	270	4	33′-0	270	4	32′-8	267	4	32′-8	267	4	32′-8	267	4	32′-8	267	7j1
6m1	APRON, TRANS., TOP		26 VAR.	33′-2 TO 42′-7	1503	23 VAR.	33′-2 TO 41′-5	1302	21 VAR.	32′-10 TO 40′-4	1157	18 VAR.	32′-10 TO 39′-3	974	15 VAR.	32′-10 TO 38′-1	799	13 VAR.	32′-10 TO 37′-4	685	6m1
6m2	APRON, TRANS., BOTT.		18 VAR.	27′-5 TO 35′-11	856	16 VAR.	27′-5 TO 34′-11	749	14 VAR.	27′-3 TO 33′-9	641	12 VAR.	27′-3 TO 32′-9	541	10 VAR.	27′-3 TO 31′-9	443	8 VAR.	27′-3 TO 30′-9	348	6m2
6p1	CURTAIN, HORIZONTAL		4	31′-11	192	4	31′-11	192	4	31′-9	191	4	31′-9	191	4	31′-9	191	4	31′-9	191	6p1
6p2	CURTAIN, HORIZONTAL		8	14′-10	178	8	13′-7	163	8	12′-4	148	8	11′-1	133	8	9′-10	118	8	8′-7	103	6p2
6s1	WING SLOPE, BOTH F.		4	7′-8	46	4	7′-8	46	4	7′-8	46	4	7′-8	46	4	7′-8	46	4	7′-8	46	6s1
6s2	WING SLOPE, BOTH F.		4	27′-9	167	4	24′-6	147	4	21′-3	128	4	18′-0	108	4	14′-9	89	4	11′-6	69	6s2
6s3	WING SLOPE, F.F.		2	33′-0	99	2	29′-9	89	2	26′-6	80	2	23′-3	70	2	20′-0	60	2	16′-9	50	6s3
6s4	INTERIOR WALLS, BOTH F.		4	23′-1	139	4	20′-11	126	4	18′-8	112	4	16′-5	99	4	14′-2	85	4	11′-11	72	6s4
5t1	CURTAIN, VERTICAL		41	7′-3	310	39	7′-0	285	37	6′-9	260	35	6′-6	237	33	6′-6	224	31	6′-6	210	5t1
ESTIMATED QUANTITIES ONE HEADWALL	REINF. STEEL		8522 LB			7353 LB			6412 LB			5475 LB			4508 LB			3796 LB		
	CONCRETE	PARAPET Δ	3.1	64.9 CY		3.1	55.3 CY		3.0	46.6 CY		3.0	39.4 CY		3.0	33.2 CY		3.0	27.4 CY		
		WINGWALLS	16.9			13.7			9.7			7.4			5.4			3.7			
		FOOTING ✱	44.9			38.5			33.9			29.0			24.8			20.7			

Δ INCLUDES TOP OF WINGWALL QUANTITIES.
✱ ASSUMES APRON AND FLOOR ARE EQUAL THICKNESS, ADJUST CONCRETE QUANTITIES FOR TRANSITION WHERE APRON AND FLOOR THICKNESS ARE NOT EQUAL.

NOTE:
WEIGHT OF BARS OVER 40′-0 LONG INCLUDES AN ALLOWANCE OF 2′-3 FOR LAP. LENGTHS SHOWN FOR BARS OVER 40′-0 LONG DO NOT INCLUDE LAP.

BENT BAR DETAILS

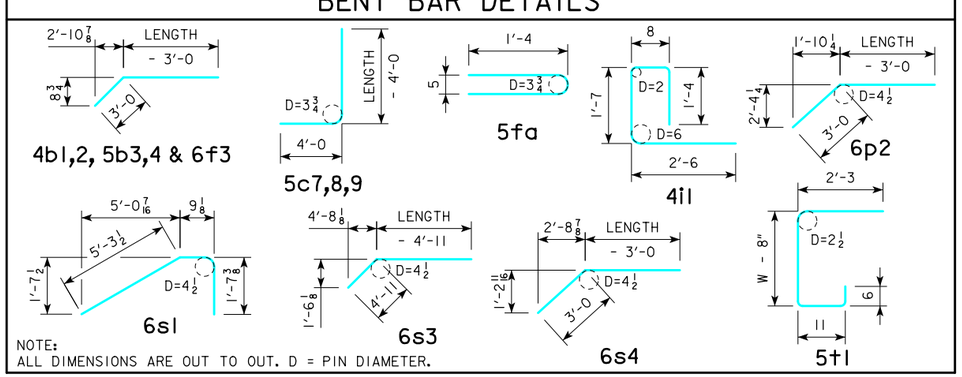

HEADWALL NOTES:

1. SEE DRAWING TRRCB G1-12 FOR GENERAL INFORMATION, SPECIFICATIONS, AND DESIGN STRESSES.
2. THIS HEADWALL IS BASED ON A 3:1 SLOPE NORMAL TO CENTERLINE OF ROADWAY.
3. THE SIDES OF THE FOOTING ARE TO BE FORMED TO INSURE CORRECT LINE AND GRADE.
4. ALL SLAB AND FLOOR REINFORCING STEEL IS TO BE SUPPORTED BY BAR CHAIRS AT INTERVALS OF NOT MORE THAN 3′-0 IN EITHER DIRECTION AS OUTLINED IN THE STANDARD SPECIFICATIONS.
5. CLEAR DISTANCE FROM FACE OF CONCRETE TO NEAR REINFORCING BAR IS TO BE 2" UNLESS OTHERWISE NOTED OR SHOWN. CLEARANCE TO THE BOTTOM ENDS OF VERTICAL BARS SHALL BE 3 INCHES.
6. CONCRETE QUANTITIES ARE ESTIMATED FROM BACK OF PARAPET.
7. HORIZONTAL TAILS OF BARS "b" & "s" ESTIMATED TO EXTEND 2′-0 BEYOND BACK OF PARAPET (INTO END OF BARREL). LONGITUDINAL BARS "d", "6f1", AND "6f3" ESTIMATED TO PROJECT INTO END SECTION OF BARREL A MINIMUM OF 2′-0 BEYOND BACK OF PARAPET.
8. THE "LENGTH" COLUMN REFLECTS TOTAL NUMBER OF FEET NECESSARY TO MEET THESE REQUIREMENTS.

LATEST REVISION DATE

APPROVED BY BRIDGE ENGINEER

IOWA DOT Highway Division

STANDARD DESIGN

TRIPLE REINFORCED CONCRETE BOX CULVERTS

APRIL, 2012

FLARED WING HEADWALLS

0° SKEW

TRH 0-6-12

ENGLISHLRFDSIGNEDTRIPLECULVERTS.DGN - TRH 0-6-12 - THIS SHEET ISSUED 04-12.

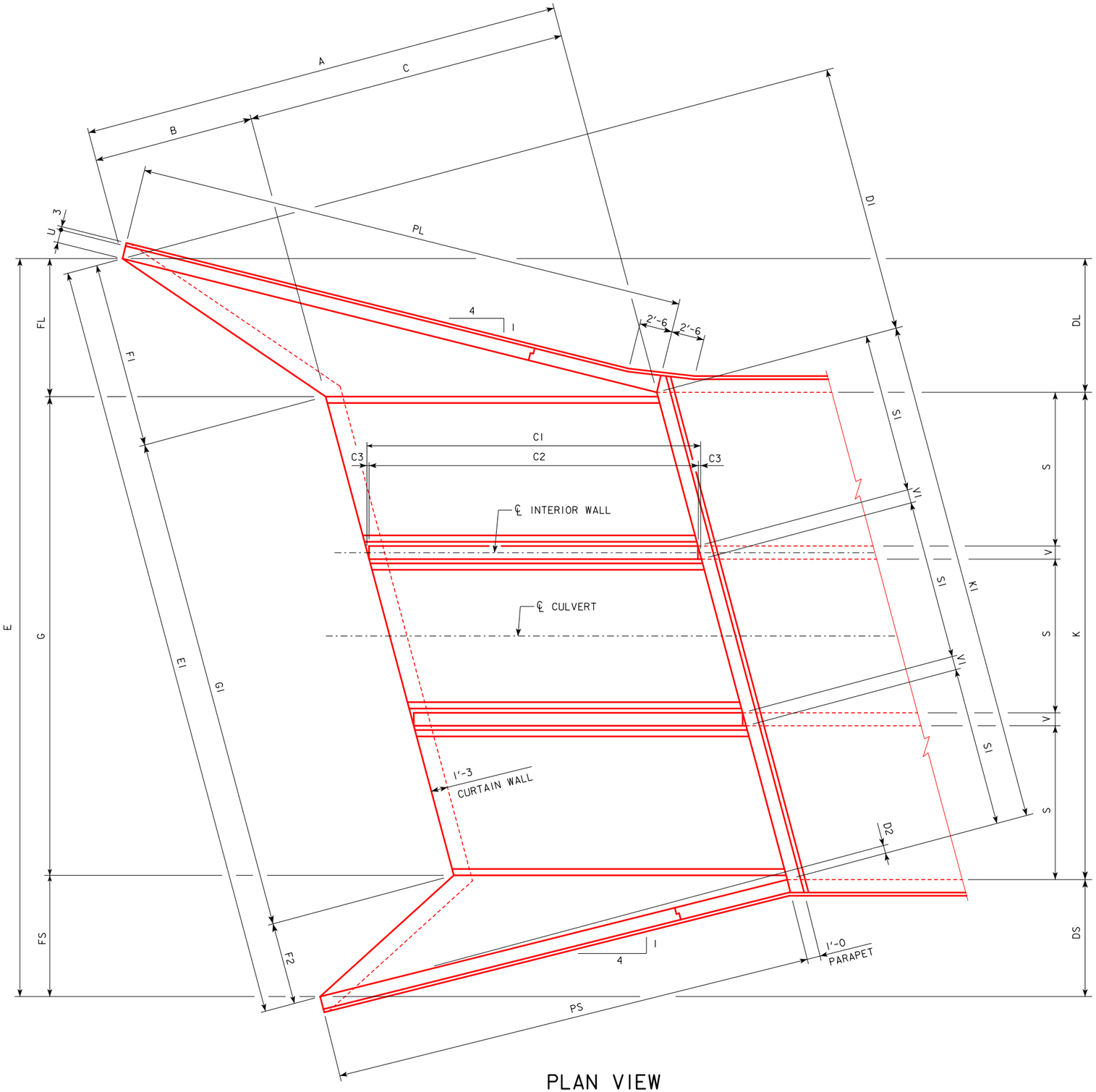

PLAN VIEW

NOTES:

1. SEE SHEET TRRCB G1-12 FOR GENERAL INFORMATION, SPECIFICATIONS AND DESIGN STRESSES.
2. SEE SHEET TRH 15-2-12 FOR DIMENSION TABLE.
3. SEE SHEET TRH 15-7-12 FOR HEADWALL NOTES.

LATEST REVISION DATE

APPROVED BY BRIDGE ENGINEER

IOWADOT Highway Division

STANDARD DESIGN

TRIPLE REINFORCED CONCRETE BOX CULVERTS

APRIL, 2012

FLARED WING HEADWALLS

15° SKEW

TRH 15-1-12

ENGLISHLRFDSIGNEDTRIPLECULVERTS.DGN - TRH 15-1-12 - THIS SHEET ISSUED 04-12.

DIMENSION TABLE

S X H	12′ X 12′	12′ X 11′	12′ X 10′	12′ X 9′	12′ X 8′	12′ X 7′	12′ X 6′	12′ X 5′	12′ X 4′	10′ X 12′	10′ X 11′	10′ X 10′	10′ X 9′	10′ X 8′	10′ X 7′	10′ X 6′	10′ X 5′	10′ X 4′	S X H
A	37′-0	34′-0	31′-0	28′-0	25′-0	22′-0	19′-0	16′-0	13′-0	37′-0	34′-0	31′-0	28′-0	25′-0	22′-0	19′-0	16′-0	13′-0	A
B	12′-4	11′-4	10′-4	9′-4	8′-4	7′-4	6′-4	5′-4	4′-4	12′-4	11′-4	10′-4	9′-4	8′-4	7′-4	6′-4	5′-4	4′-4	B
C	24′-8	22′-8	20′-8	18′-8	16′-8	14′-8	12′-8	10′-8	8′-8	24′-8	22′-8	20′-8	18′-8	16′-8	14′-8	12′-8	10′-8	8′-8	C
C1	25′-6 1/2	23′-5 5/8	21′-4 3/4	19′-3 7/8	17′-3	15′-2 1/4	13′-1 3/8	11′-0 1/2	8′-11 5/8	25′-6 1/2	23′-5 5/8	21′-4 3/4	19′-3 7/8	17′-3	15′-2 1/4	13′-1 3/8	11′-0 1/2	8′-11 5/8	C1
C2	25′-3 1/4	23′-2 5/8	21′-2 1/8	19′-1 1/4	17′-0 3/8	14′-11 3/4	12′-11	10′-10 1/8	8′-9 1/4	25′-3 1/4	23′-2 5/8	21′-2 1/8	19′-1 1/4	17′-0 3/8	14′-11 3/4	12′-11	10′-10 1/8	8′-9 1/4	C2
C3	0′-1 5/8	0′-1 1/2	0′-1 3/8	0′-1 3/8	0′-1 3/8	0′-1 1/4	0′-1 1/4	0′-1 1/4	0′-1 1/4	0′-1 5/8	0′-1 1/2	0′-1 3/8	0′-1 3/8	0′-1 3/8	0′-1 1/4	0′-1 1/4	0′-1 1/4	0′-1 1/4	C3
DL	10′-3 1/8	9′-5 1/8	8′-7 1/4	7′-9 1/4	6′-11 1/4	6′-1 1/4	5′-3 1/4	4′-5 1/4	3′-7 1/4	10′-3 1/8	9′-5 1/8	8′-7 1/4	7′-9 1/4	6′-11 1/4	6′-1 1/4	5′-3 1/4	4′-5 1/4	3′-7 1/4	DL
DS	8′-11 3/4	8′-3	7′-6 1/4	6′-9 1/2	6′-0 3/4	5′-4	4′-7 1/4	3′-10 5/8	3′-1 7/8	8′-11 3/4	8′-3	7′-6 1/4	6′-9 1/2	6′-0 3/4	5′-4	4′-7 1/4	3′-10 5/8	3′-1 7/8	DS
D1	20′-6 1/2	18′-10 1/2	17′-2 1/2	15′-6 1/2	13′-10 1/2	12′-2 1/2	10′-6 5/8	8′-10 5/8	7′-2 5/8	20′-6 1/2	18′-10 1/2	17′-2 1/2	15′-6 1/2	13′-10 1/2	12′-2 1/2	10′-6 5/8	8′-10 5/8	7′-2 5/8	D1
D2	0′-7 1/2	0′-6 7/8	0′-6 1/4	0′-5 5/8	0′-5	0′-4 1/2	0′-3 7/8	0′-3 1/4	0′-2 5/8	0′-7 1/2	0′-6 7/8	0′-6 1/4	0′-5 5/8	0′-5	0′-4 1/2	0′-3 7/8	0′-3 1/4	0′-2 5/8	D2
E	57′-2 7/8	55′-6 1/8	53′-9 3/8	52′-2 3/4	50′-8	48′-11 1/4	47′-4 1/2	45′-9 7/8	44′-3 1/8	51′-2 7/8	49′-6 1/8	47′-9 3/8	46′-2 3/4	44′-8	42′-11 1/4	41′-4 1/2	39′-9 7/8	38′-3 1/8	E
E1	59′-3 1/8	57′-5 5/8	55′-8 1/4	54′-0 7/8	52′-5 1/2	50′-8	49′-0 5/8	47′-5 1/4	45′-9 7/8	53′-0 1/2	51′-3 1/8	49′-5 5/8	47′-10 1/4	46′-2 7/8	44′-5 1/2	42′-10 1/8	41′-2 3/4	39′-7 1/4	E1
FL	10′-7 1/8	9′-9 1/8	8′-11 1/4	8′-1 1/4	7′-3 1/4	6′-5 1/4	5′-7 1/4	4′-9 1/4	3′-11 1/4	10′-7 1/8	9′-9 1/8	8′-11 1/4	8′-1 1/4	7′-3 1/4	6′-5 1/4	5′-7 1/4	4′-9 1/4	3′-11 1/4	FL
FS	9′-3 3/4	8′-7	7′-10 1/4	7′-1 1/2	6′-4 3/4	5′-8	4′-11 1/4	4′-2 5/8	3′-5 7/8	9′-3 3/4	8′-7	7′-10 1/4	7′-1 1/2	6′-4 3/4	5′-8	4′-11 1/4	4′-2 5/8	3′-5 7/8	FS
F1	14′-3 1/4	13′-1 3/4	12′-0 1/4	10′-10 5/8	9′-9 1/8	8′-7 1/2	7′-6	6′-4 3/8	5′-2 7/8	14′-3 1/4	13′-1 3/4	12′-0 1/4	10′-10 5/8	9′-9 1/8	8′-7 1/2	7′-6	6′-4 3/8	5′-2 7/8	F1
F2	6′-4	5′-10 1/8	5′-4 3/8	4′-10 1/2	4′-4 5/8	3′-10 7/8	3′-5	2′-11 1/4	2′-5 3/8	6′-4	5′-10 1/8	5′-4 3/8	4′-10 1/2	4′-4 5/8	3′-10 7/8	3′-5	2′-11 1/4	2′-5 3/8	F2
G	37′-4	37′-2	37′-0	37′-0	37′-0	36′-10	36′-10	36′-10	36′-10	31′-4	31′-2	31′-0	31′-0	31′-0	30′-10	30′-10	30′-10	30′-10	G
G1	38′-7 3/4	38′-5 3/4	38′-3 5/8	38′-3 5/8	38′-3 5/8	38′-1 5/8	38′-1 5/8	38′-1 5/8	38′-1 5/8	32′-5 1/4	32′-3 1/4	32′-1 1/8	32′-1 1/8	32′-1 1/8	31′-11	31′-11	31′-11	31′-11	G1
G2	39′-10 1/2	39′-8 1/2	39′-6 3/8	39′-6 1/4	39′-6 1/4	39′-4 1/8	39′-4	39′-3 7/8	39′-3 3/4	33′-8	33′-5 7/8	33′-3 3/4	33′-3 3/4	33′-3 3/4	33′-1 5/8	33′-1 1/2	33′-1 3/8	33′-1 1/4	G2
G3	18′-10 3/8	17′-4 1/4	15′-10 1/8	14′-4 1/8	12′-10	11′-3 7/8	9′-9 3/4	8′-3 5/8	6′-9 5/8	18′-10 3/8	17′-4 1/4	15′-10 1/8	14′-4 1/8	12′-10	11′-3 7/8	9′-9 3/4	8′-3 5/8	6′-9 5/8	G3
G4	19′-6 5/8	17′-9 5/8	16′-0 5/8	14′-6 5/8	13′-0 1/2	11′-3 5/8	9′-9 5/8	8′-3 1/2	6′-9 5/8	19′-6 5/8	17′-9 5/8	16′-0 5/8	14′-6 5/8	13′-0 1/2	11′-3 5/8	9′-9 5/8	8′-3 1/2	6′-9 5/8	G4
G5	13′-10 3/8	12′-9	11′-7 3/4	10′-6 3/8	9′-5	8′-3 3/4	7′-2 3/8	6′-1	4′-11 3/4	13′-10 3/8	12′-9	11′-7 3/4	10′-6 3/8	9′-5	8′-3 3/4	7′-2 3/8	6′-1	4′-11 3/4	G5
G6	14′-11 1/4	13′-7 7/8	12′-4 3/8	11′-3 1/8	10′-1 3/4	8′-10 3/8	7′-9 1/8	6′-7 7/8	5′-6 5/8	14′-11 1/4	13′-7 7/8	12′-4 3/8	11′-3 1/8	10′-1 3/4	8′-10 3/8	7′-9 1/8	6′-7 7/8	5′-6 5/8	G6
G7	0′-2 5/8	0′-5 3/8	0′-8 1/8	0′-8 1/8	0′-8 1/8	0′-10 3/4	0′-10 5/8	0′-10 5/8	0′-10 1/2	0′-2 5/8	0′-5 3/8	0′-8 1/8	0′-8 1/8	0′-8 1/8	0′-10 3/4	0′-10 5/8	0′-10 5/8	0′-10 1/2	G7
G8	0′-3 3/4	0′-5 5/8	0′-7 1/2	0′-7 1/2	0′-7 1/2	0′-9 1/4	0′-9 1/4	0′-9 1/4	0′-9 1/8	0′-3 3/4	0′-5 5/8	0′-7 1/2	0′-7 1/2	0′-7 1/2	0′-9 1/4	0′-9 1/4	0′-9 1/4	0′-9 1/8	G8
K	38′-0	37′-10	37′-8	37′-8	37′-8	37′-6	37′-6	37′-6	37′-6	32′-0	31′-10	31′-8	31′-8	31′-8	31′-6	31′-6	31′-6	31′-6	K
K1	39′-4 1/8	39′-2	39′-0	39′-0	39′-0	38′-9 7/8	38′-9 7/8	38′-9 7/8	38′-9 7/8	33′-1 1/2	32′-11 1/2	32′-9 3/8	32′-9 3/8	32′-9 3/8	32′-7 3/8	32′-7 3/8	32′-7 3/8	32′-7 3/8	K1
PL	42′-3 7/8	38′-10 5/8	35′-5 1/2	32′-0 1/4	28′-7 1/8	25′-2	21′-8 3/4	18′-3 5/8	14′-10 3/8	42′-3 7/8	38′-10 5/8	35′-5 1/2	32′-0 1/4	28′-7 1/8	25′-2	21′-8 3/4	18′-3 5/8	14′-10 3/8	PL
PS	37′-0 1/8	34′-0	31′-0	28′-0	25′-0	22′-0	19′-0	16′-0	13′-0	37′-0 1/8	34′-0	31′-0	28′-0	25′-0	22′-0	19′-0	16′-0	13′-0	PS
RL	44′-1	40′-6 1/8	36′-11 1/8	33′-4 1/4	29′-9 3/8	26′-2 1/2	22′-7 5/8	19′-0 3/4	15′-5 7/8	44′-1	40′-6 1/8	36′-11 1/8	33′-4 1/4	29′-9 3/8	26′-2 1/2	22′-7 5/8	19′-0 3/4	15′-5 7/8	RL
RS	39′-0 1/8	35′-10 1/8	32′-8 1/8	29′-6 1/4	26′-4 1/4	23′-2 3/8	20′-0 3/8	16′-10 3/8	13′-8 1/2	39′-0 1/8	35′-10 1/8	32′-8 1/8	29′-6 1/4	26′-4 1/4	23′-2 3/8	20′-0 3/8	16′-10 3/8	13′-8 1/2	RS
R1	27′-6 3/4	25′-3 3/8	23′-0 1/8	20′-8 1/2	18′-5	16′-1 5/8	13′-10 1/8	11′-6 5/8	9′-3 1/4	27′-6 3/4	25′-3 3/8	23′-0 1/8	20′-8 1/2	18′-5	16′-1 5/8	13′-10 1/8	11′-6 5/8	9′-3 1/4	R1
S1	12′-5 1/8	12′-5 1/8	12′-5 1/8	12′-5 1/8	12′-5 1/8	12′-5 1/8	12′-5 1/8	12′-5 1/8	12′-5 1/8	10′-4 1/4	10′-4 1/4	10′-4 1/4	10′-4 1/4	10′-4 1/4	10′-4 1/4	10′-4 1/4	10′-4 1/4	10′-4 1/4	S1
T	1′-2	1′-2	1′-2	1′-2	1′-2	1′-2	1′-2	1′-2	1′-2	1′-1	1′-1	1′-1	1′-1	1′-1	1′-1	1′-1	1′-1	1′-1	T
U	1′-0	0′-11	0′-10	0′-10	0′-10	0′-9	0′-9	0′-9	0′-9	1′-0	0′-11	0′-10	0′-10	0′-10	0′-9	0′-9	0′-9	0′-9	U
V	1′-0	0′-11	0′-10	0′-10	0′-10	0′-9	0′-9	0′-9	0′-9	1′-0	0′-11	0′-10	0′-10	0′-10	0′-9	0′-9	0′-9	0′-9	V
V1	1′-0 3/8	0′-11 3/8	0′-10 3/8	0′-10 3/8	0′-10 3/8	0′-9 3/8	0′-9 3/8	0′-9 3/8	0′-9 3/8	1′-0 3/8	0′-11 3/8	0′-10 3/8	0′-10 3/8	0′-10 3/8	0′-9 3/8	0′-9 3/8	0′-9 3/8	0′-9 3/8	V1
W	5′-0	4′-9	4′-6	4′-3	4′-0	3′-9	3′-6	3′-6	3′-6	5′-0	4′-9	4′-6	4′-3	4′-0	3′-9	3′-6	3′-6	3′-6	W

NOTES:

1. SEE SHEET TRRCB G1-12 FOR GENERAL INFORMATION, SPECIFICATIONS, AND DESIGN STRESSES.
2. SEE SHEETS TRH 15-1-12 AND TRH 15-3-12 THRU 15-6-12 FOR LOCATION OF CERTAIN DIMENSIONS TABULATED.
3. SEE SHEET TRH 15-7-12 FOR HEADWALL NOTES.

LATEST REVISION DATE

APPROVED BY BRIDGE ENGINEER

IOWA DOT Highway Division

STANDARD DESIGN

TRIPLE REINFORCED CONCRETE BOX CULVERTS

APRIL, 2012

FLARED WING HEADWALLS

15° SKEW

TRH 15-2-12

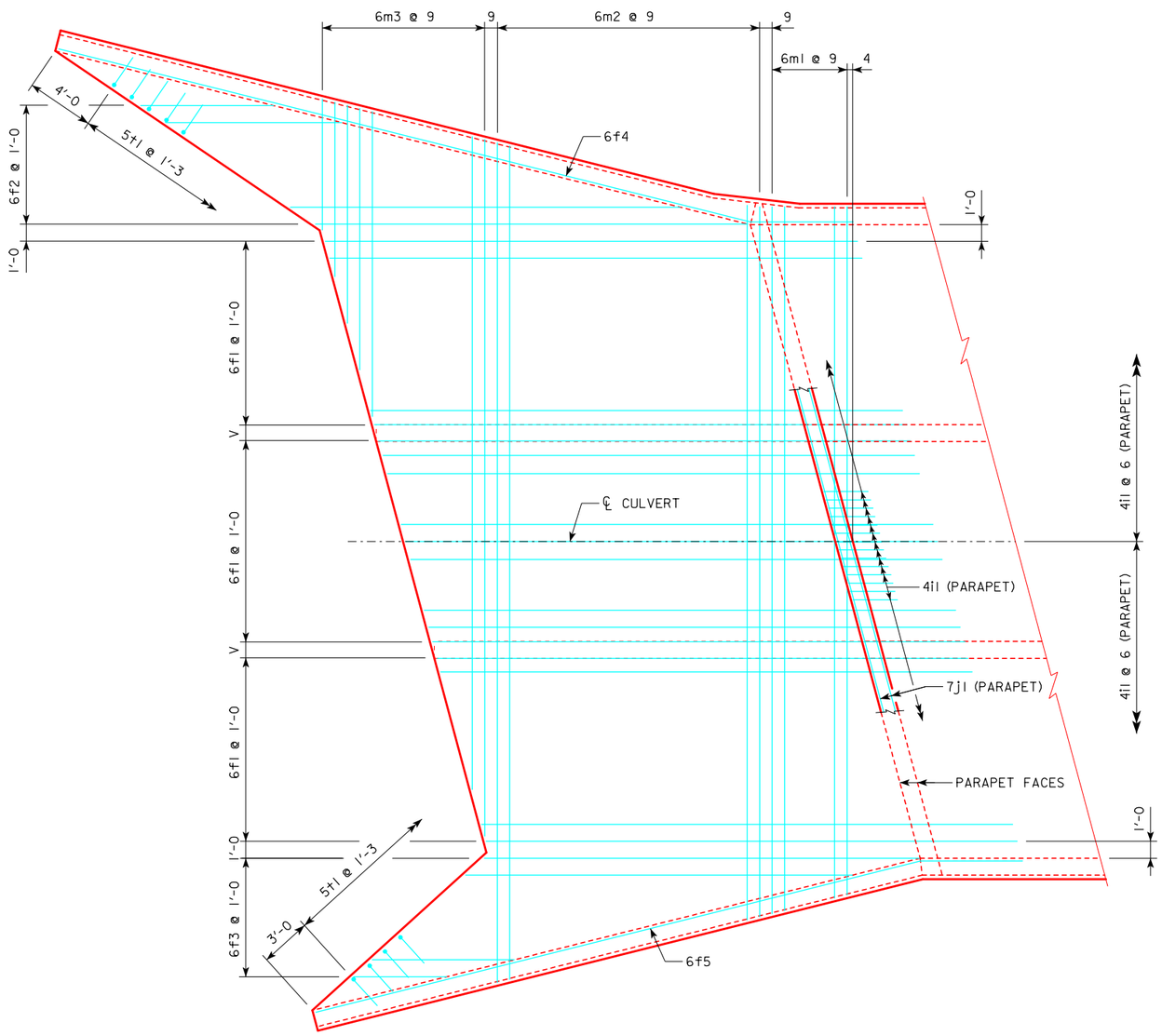

PLAN VIEW - TOP OF APRON REINFORCING BARS

NOTES:

1. BAR SPACINGS AND POSITIONS SHOWN ARE SIMILAR FOR ALL SIZES OF HEADWALLS IN THIS STANDARD.
2. TOP TRANSVERSE FLOOR BARS ARE REFERENCED APPROXIMATELY 4" FROM THE BACK OF THE PARAPET FOR ALL HEADWALLS.
3. FOR DIMENSION TABLE SEE SHEET TRH 15-2-12.
4. FOR REINFORCING IN CURTAIN WALL SEE CURTAIN WALL DETAILS ON SHEET TRH 15-5-12.

LATEST REVISION DATE

APPROVED BY BRIDGE ENGINEER

IOWA DOT Highway Division

STANDARD DESIGN

TRIPLE REINFORCED CONCRETE BOX CULVERTS

APRIL, 2012

FLARED WING HEADWALLS

15° SKEW

TRH 15-3-12

ENGLISHLRFDSIGNEDTRIPLECULVERTS.DGN - TRH 15-3-12 - THIS SHEET ISSUED 04-12.

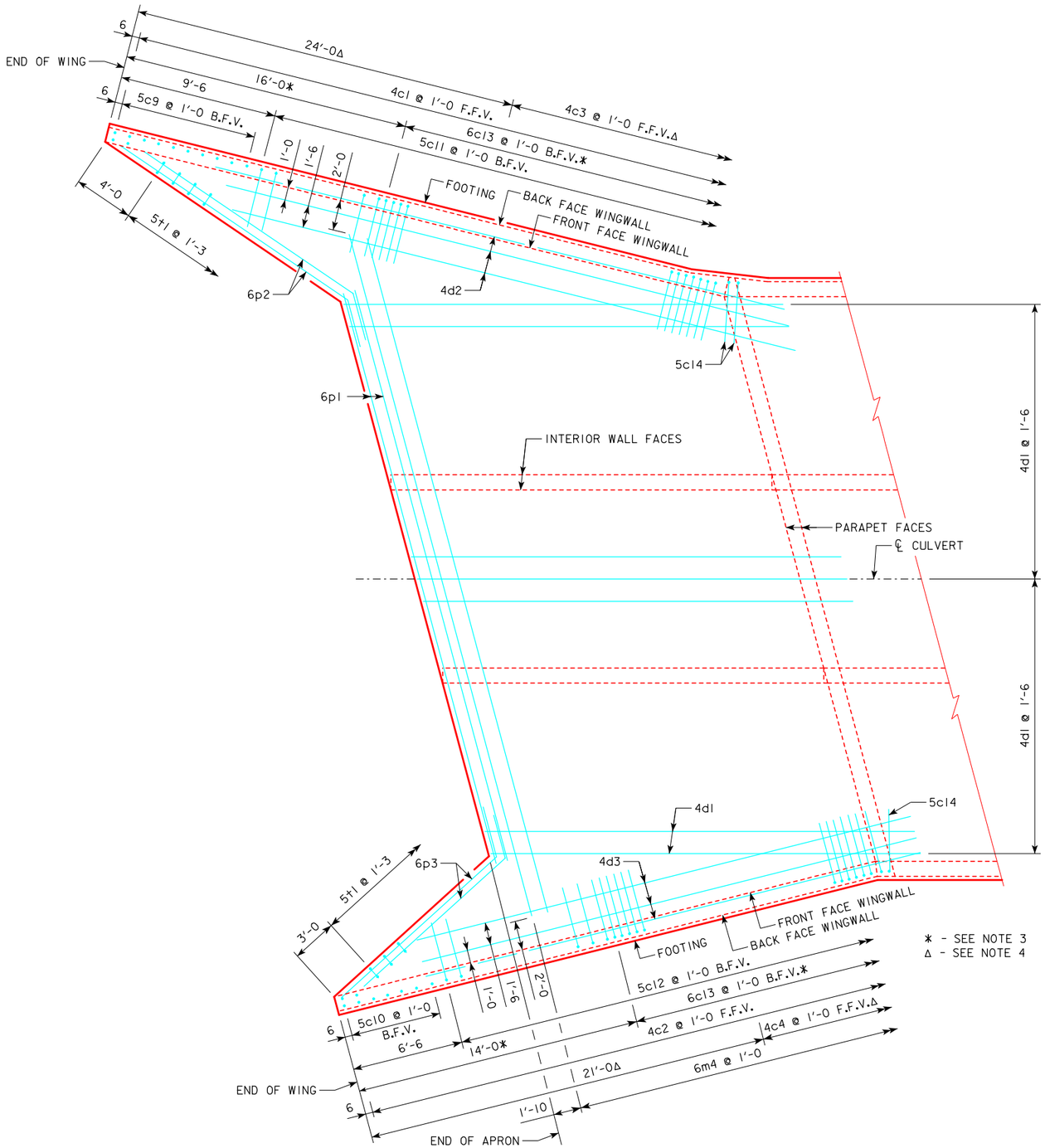

* - SEE NOTE 3
Δ - SEE NOTE 4

NOTES:

1. BAR SPACINGS AND POSITIONS SHOWN ARE SIMILAR FOR ALL SIZES OF HEADWALLS IN THIS STANDARD.
2. WINGWALL BARS CONSISTENTLY REFERENCED FROM END OF WING FOR ALL HEADWALLS.
3. THERE ARE NO 6c13 BARS IN THE 4' & 5' HEIGHT HEADWALLS.
4. 4c3 & 4c4 BARS USED ONLY IN THE 9', 10', 11' & 12' HEIGHT HEADWALLS.
5. FOR DIMENSION TABLE SEE SHEET TRH 15-2-12.
6. FOR REINFORCING IN CURTAIN WALL SEE CURTAIN WALL DETAILS ON SHEET TRH 15-5-12.

PLAN VIEW - BOTTOM OF APRON REINFORCING BARS

LATEST REVISION DATE

APPROVED BY BRIDGE ENGINEER

IOWADOT Highway Division

STANDARD DESIGN

TRIPLE REINFORCED CONCRETE BOX CULVERTS

APRIL, 2012

FLARED WING HEADWALLS

15° SKEW

TRH 15-4-12

ENGLISHLRFDSIGNEDTRIPLECULVERTS.DGN - TRH 15-4-12 - THIS SHEET ISSUED 04-12.

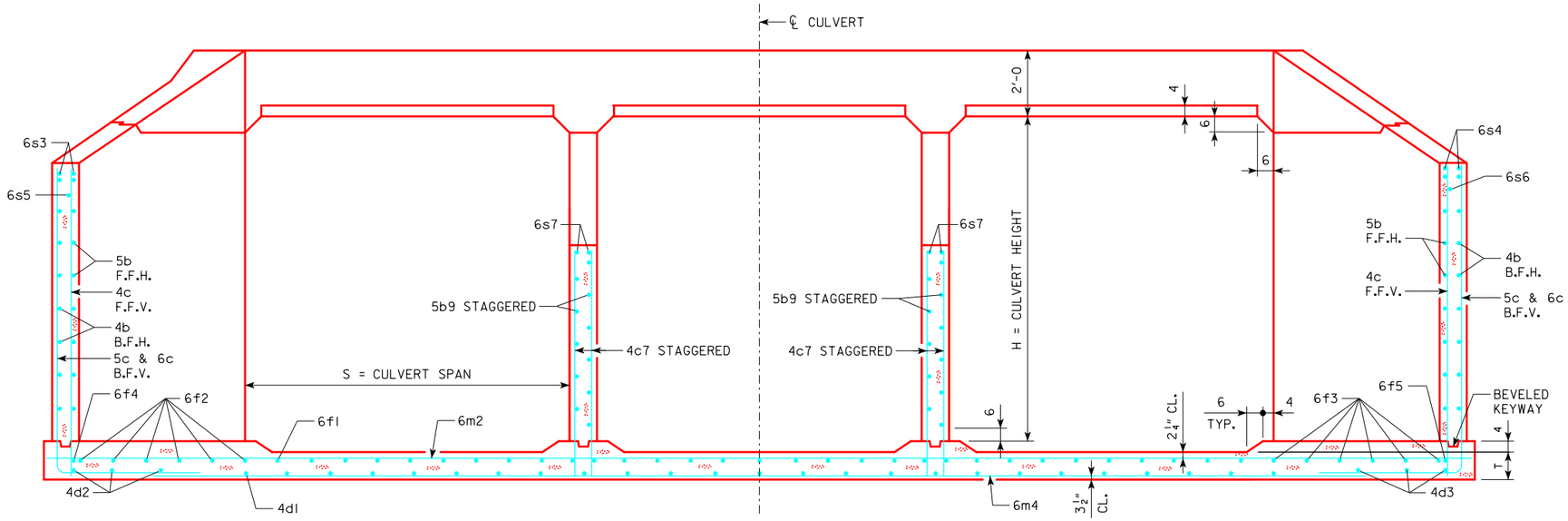

TYPICAL SECTION - NEAR CENTER OF APRON

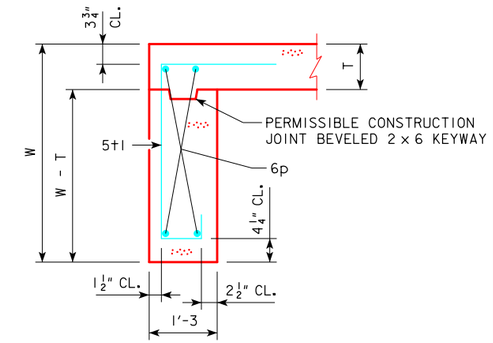

SECTION THRU CURTAIN WALL

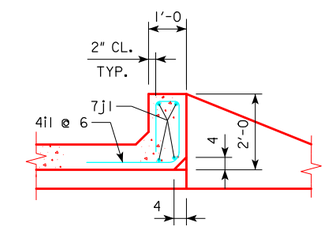

SECTION THRU PARAPET

CULVERT HEIGHT (H)	ANGLE	
	∡L	∡S
4'	35°24'	44°28'
5'	35°02'	43°51'
6'	34°49'	43°21'
7'	34°38'	43°03'
8'	34°31'	42°45'
9'	34°23'	42°35'
10'	34°19'	42°26'
11'	34°14'	42°17'
12'	34°10'	42°11'

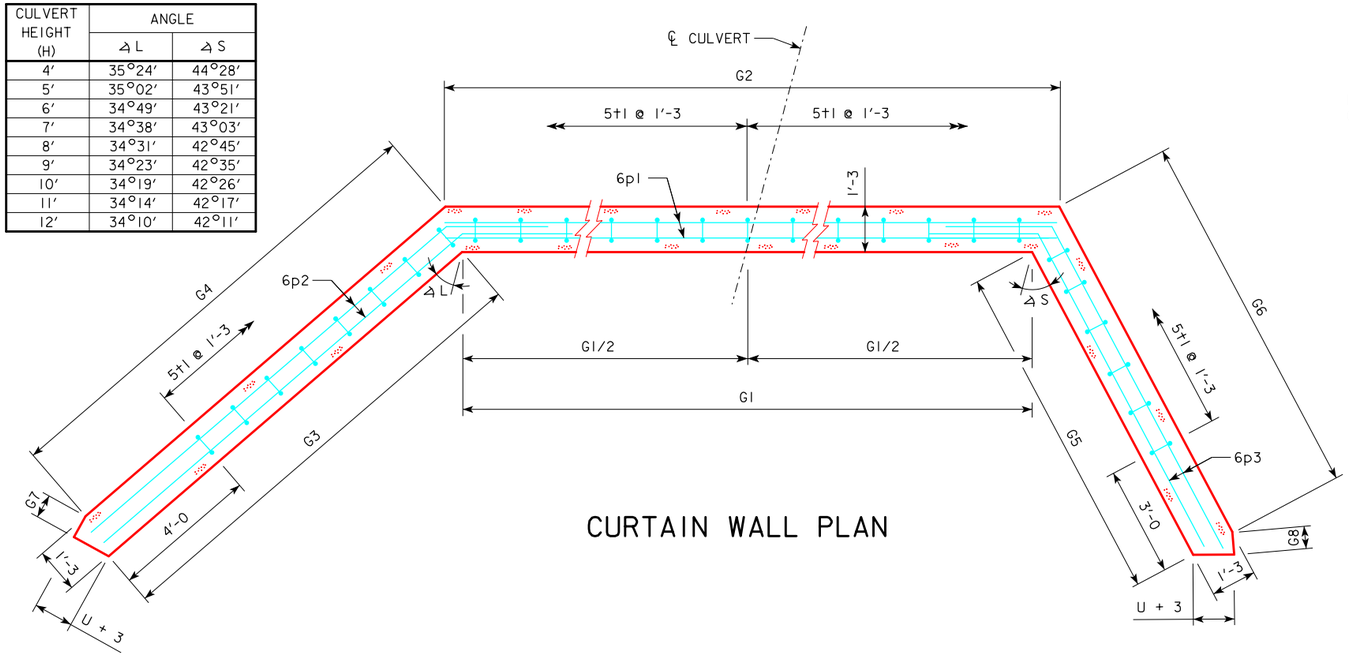

CURTAIN WALL PLAN

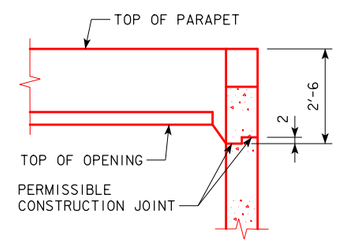

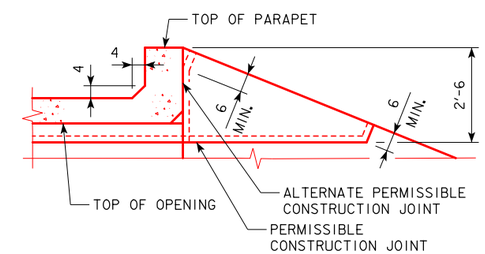

TOP OF WINGWALL DETAILS

NOTES:

1. SEE SHEET TRRCB G1-12 FOR GENERAL INFORMATION, SPECIFICATIONS, AND DESIGN STRESSES.
2. FOR DIMENSION TABLE SEE SHEET TRH 15-2-12.

LATEST REVISION DATE

APPROVED BY BRIDGE ENGINEER

IOWA DOT Highway Division

STANDARD DESIGN

TRIPLE REINFORCED CONCRETE BOX CULVERTS

APRIL, 2012

FLARED WING HEADWALLS

15° SKEW

TRH 15-5-12

ENGLISHLRFDSIGNEDTRIPLECULVERTS.DGN - TRH 15-5-12 - THIS SHEET ISSUED 04-12.

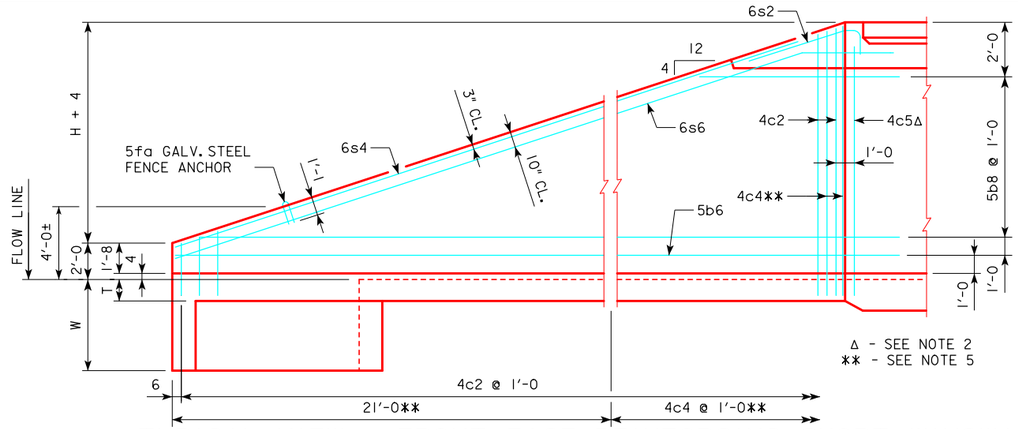

TYPICAL VIEW - FRONT FACE REINFORCING SHORT WINGWALL

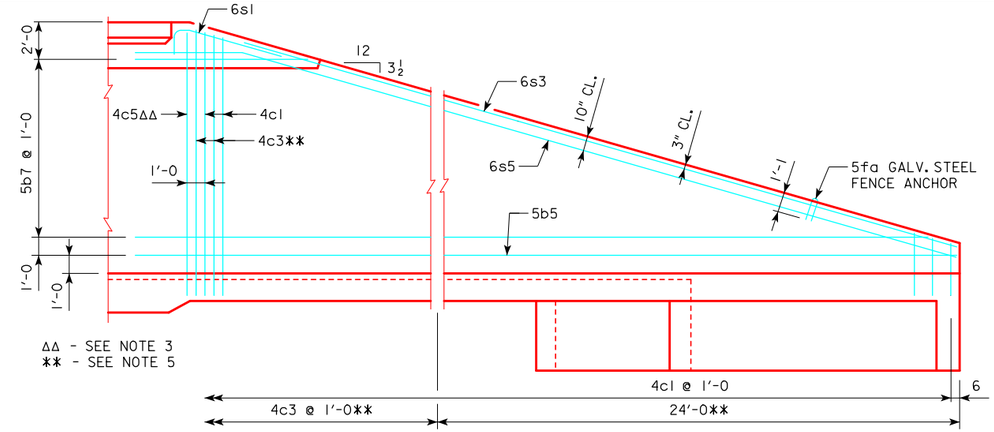

TYPICAL VIEW - FRONT FACE REINFORCING LONG WINGWALL

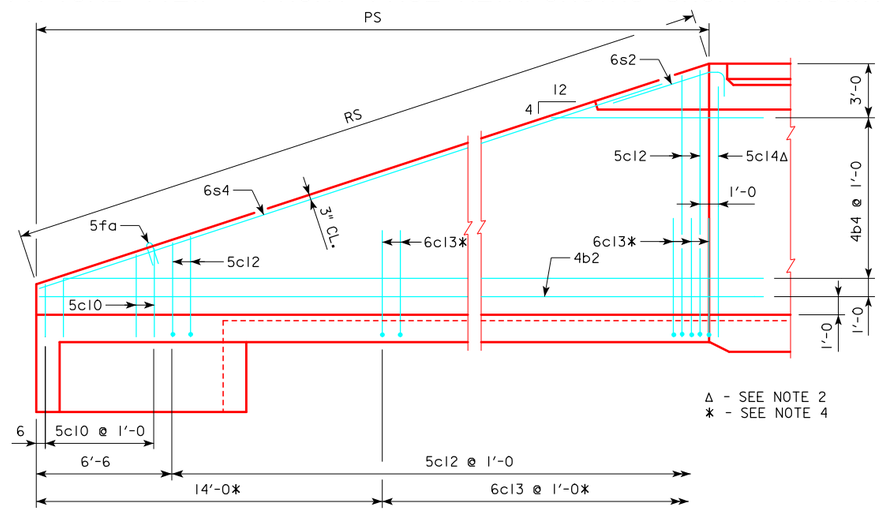

TYPICAL VIEW - BACK FACE REINFORCING SHORT WINGWALL

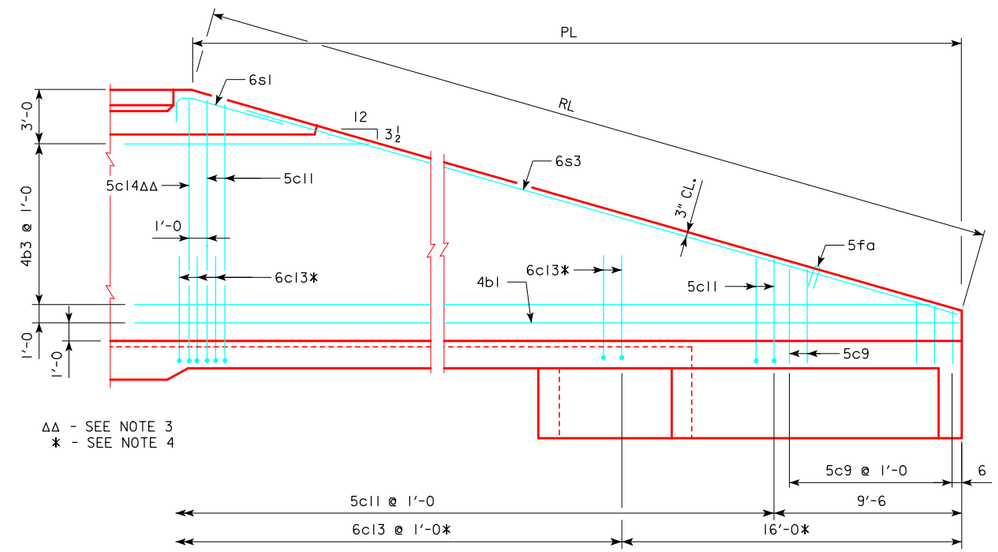

TYPICAL VIEW - BACK FACE REINFORCING LONG WINGWALL

CULVERT HEIGHT (H)	SLOPE y INCHES
4'	$4\frac{1}{8}$
5'	$4\frac{7}{16}$
6'	$4\frac{5}{8}$
7'	$4\frac{13}{16}$
8'	$4\frac{15}{16}$
9'	5
10'	$5\frac{1}{8}$
11'	$5\frac{3}{16}$
12'	$5\frac{1}{4}$

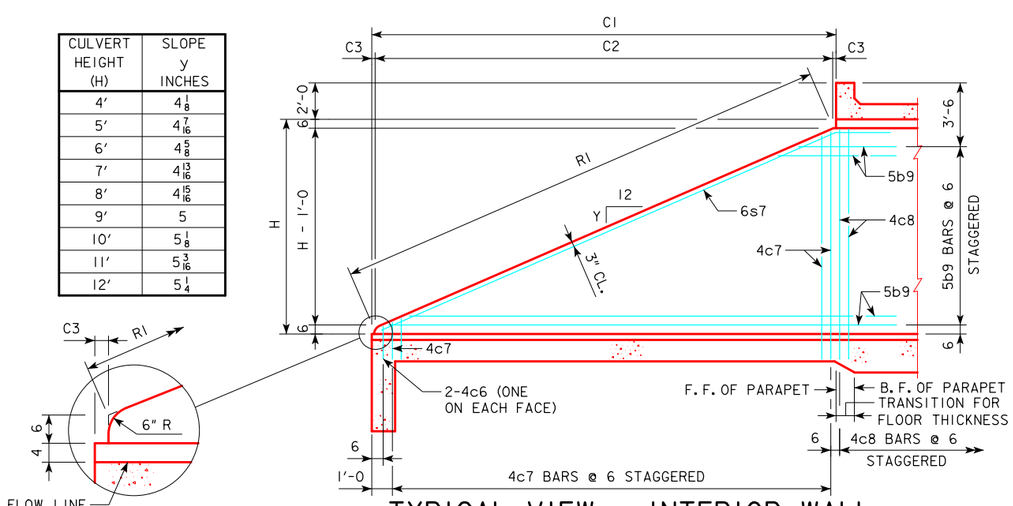

TYPICAL VIEW - INTERIOR WALL

NOTES:

1. BAR SPACINGS AND POSITIONS SHOWN ARE SIMILAR FOR ALL SIZES OF HEADWALLS IN THIS STANDARD.
2. TWO 4c5 & TWO 5c14 BARS FOR ALL HEADWALLS.
3. TWO 4c5 & TWO 5c14 BARS FOR 4', 5', 7', 9', 10' & 12' HEIGHT HEADWALLS. ONE 4c5 & ONE 5c14 BAR FOR 6', 8' & 11' HEIGHT HEADWALLS.
4. NOT APPLICABLE FOR 4' & 5' HEADWALLS.
5. NOT APPLICABLE FOR 4' THRU 8' HEIGHT HEADWALLS.
6. FOR DIMENSION TABLE SEE SHEET TRH 15-2-12.

07-2016
LATEST REVISION DATE

APPROVED BY BRIDGE ENGINEER

IOWA DOT Highway Division

STANDARD DESIGN

TRIPLE REINFORCED CONCRETE BOX CULVERTS

APRIL, 2012

FLARED WING HEADWALLS

15° SKEW

TRH 15-6-12

REVISED 05-13 - CHANGED BAR MARK 6c3 TO 6c13 IN TYPICAL VIEW - BACK FACE REINFORCING LONG WINGWALL DETAIL.
REVISED 07-2016 - REMOVED 1'-8 VERTICAL DIMENSION FROM 6s5 & 6s6 BARS TO TOP OF PARAPET. THIS ALLOWS FOR THE VARIABLE VERTICAL LOCATION OF THE HORIZONTAL LEG IN THE SLAB.
THIS VARIANCE IN LOCATION IS CAUSED BY THE DIFFERING WING SIZES OF DIFFERENT SIZED R.C.B. CULVERTS.
ENGLISHLRFDSIGNEDTRIPLECULVERTS.DGN - TRH 15-6-12 - THIS SHEET ISSUED 04-12.

BILL OF REINFORCING FOR ONE HEADWALL 15° SKEW CULVERT SPAN x CULVERT HEIGHT

BAR	LOCATION	SHAPE	12' x 12' NO.	12' x 12' LENGTH	12' x 12' WT.	12' x 11' NO.	12' x 11' LENGTH	12' x 11' WT.	12' x 10' NO.	12' x 10' LENGTH	12' x 10' WT.	12' x 9' NO.	12' x 9' LENGTH	12' x 9' WT.	12' x 8' NO.	12' x 8' LENGTH	12' x 8' WT.	12' x 7' NO.	12' x 7' LENGTH	12' x 7' WT.	12' x 6' NO.	12' x 6' LENGTH	12' x 6' WT.	BAR
5fa	FENCE ANCHOR (GALV.)		2	2'-10	6	2	2'-10	6	2	2'-10	6	2	2'-10	6	2	2'-10	6	2	2'-10	6	2	2'-10	6	5fa
4b1	WINGWALL, B.F.H. LONG		1	45'-0	32	1	41'-7	29	1	38'-2	25	1	34'-9	23	1	31'-4	21	1	27'-11	19	1	24'-6	16	4b1
4b2	WINGWALL, B.F.H. SHORT		1	39'-8	26	1	36'-9	25	1	33'-9	23	1	30'-9	21	1	27'-9	19	1	24'-9	17	1	21'-9	15	4b2
4b3	WINGWALL, B.F.H. LONG		10 VAR.	12'-7 TO 43'-5	189	9 VAR.	12'-7 TO 40'-0	158	8 VAR.	12'-7 TO 36'-7	131	7 VAR.	12'-7 TO 33'-2	107	6 VAR.	12'-7 TO 29'-9	85	5 VAR.	12'-7 TO 26'-4	65	4 VAR.	12'-7 TO 22'-11	47	4b3
4b4	WINGWALL, B.F.H. SHORT		10 VAR.	11'-4 TO 38'-4	166	9 VAR.	11'-4 TO 35'-4	140	8 VAR.	11'-4 TO 32'-4	117	7 VAR.	11'-4 TO 29'-4	95	6 VAR.	11'-4 TO 26'-4	75	5 VAR.	11'-4 TO 23'-4	58	4 VAR.	11'-4 TO 20'-4	42	4b4
5b5	WINGWALL, F.F.H. LONG		1	45'-1	49	1	41'-8	46	1	38'-3	40	1	34'-10	36	1	31'-4	33	1	27'-11	29	1	24'-6	26	5b5
5b6	WINGWALL, F.F.H. SHORT		1	39'-9	41	1	36'-9	38	1	33'-9	35	1	30'-9	32	1	27'-9	29	1	24'-9	26	1	21'-9	23	5b6
5b7	WINGWALL, F.F.H. LONG		11 VAR.	9'-3 TO 43'-6	307	10 VAR.	9'-3 TO 40'-1	260	9 VAR.	9'-3 TO 36'-8	216	8 VAR.	9'-3 TO 33'-3	177	7 VAR.	9'-3 TO 29'-10	143	6 VAR.	9'-3 TO 26'-4	111	5 VAR.	9'-3 TO 22'-11	84	5b7
5b8	WINGWALL, F.F.H. SHORT		11 VAR.	8'-5 TO 38'-5	269	10 VAR.	8'-5 TO 35'-5	229	9 VAR.	8'-5 TO 32'-5	192	8 VAR.	8'-5 TO 29'-5	158	7 VAR.	8'-5 TO 26'-5	127	6 VAR.	8'-5 TO 23'-5	100	5 VAR.	8'-5 TO 20'-5	75	5b8
5b9	INTERIOR WALLS, BOTH F.H.		42 VAR.	2 EA. 5'-1 TO 28'-1	726	38 VAR.	2 EA. 5'-1 TO 26'-0	616	34 VAR.	2 EA. 5'-1 TO 23'-11	514	30 VAR.	2 EA. 5'-2 TO 21'-10	422	26 VAR.	2 EA. 5'-2 TO 19'-9	338	22 VAR.	2 EA. 5'-3 TO 17'-9	264	18 VAR.	2 EA. 5'-4 TO 15'-8	197	5b9
4c1	WINGWALL, F.F.V. LONG		42 VAR.	2'-10 TO 14'-10	248	39 VAR.	2'-10 TO 13'-11	218	35 VAR.	2'-10 TO 12'-9	182	32 VAR.	2'-10 TO 11'-11	158	29 VAR.	2'-10 TO 11'-0	134	25 VAR.	2'-10 TO 9'-10	106	22 VAR.	2'-10 TO 9'-0	87	4c1
4c2	WINGWALL, F.F.V. SHORT		37 VAR.	2'-10 TO 14'-10	218	34 VAR.	2'-10 TO 13'-10	189	31 VAR.	2'-10 TO 12'-10	162	28 VAR.	2'-10 TO 11'-10	137	25 VAR.	2'-10 TO 10'-10	114	22 VAR.	2'-10 TO 9'-10	93	19 VAR.	2'-10 TO 8'-10	74	4c2
4c3	WINGWALL, F.F.V. LONG		19 VAR.	9'-8 TO 14'-11	156	16 VAR.	9'-8 TO 14'-1	127	12 VAR.	9'-8 TO 12'-11	91	9 VAR.	9'-8 TO 12'-0	65	---	---	---	---	---	---	---	---	---	4c3
4c4	WINGWALL, F.F.V. SHORT		17 VAR.	9'-8 TO 15'-0	140	14 VAR.	9'-8 TO 14'-0	111	11 VAR.	9'-8 TO 13'-0	83	8 VAR.	9'-8 TO 12'-0	58	---	---	---	---	---	---	---	---	---	4c4
4c5	WINGWALL, F.F.V. LONG		2	13'-9	18	1	12'-9	9	2	11'-9	16	2	10'-9	14	1	9'-9	7	2	8'-9	12	1	7'-9	5	4c5
4c5	WINGWALL, F.F.V. SHORT		2	13'-9	18	2	12'-9	17	2	11'-9	16	2	10'-9	14	2	9'-9	13	2	8'-9	12	2	7'-9	10	4c5
4c6	INTERIOR WALLS, BOTH F.V.		4	1'-9	5	4	1'-9	5	4	1'-9	5	4	1'-9	5	4	1'-9	5	4	1'-9	5	4	1'-9	5	4c6
4c7	INTERIOR WALLS, BOTH F.V.		98 VAR.	2 EA. 2'-0 TO 12'-5	472	90 VAR.	2 EA. 1'-11 TO 11'-5	401	82 VAR.	2 EA. 1'-11 TO 10'-5	338	74 VAR.	2 EA. 1'-11 TO 9'-6	282	66 VAR.	2 EA. 1'-11 TO 8'-6	230	56 VAR.	2 EA. 1'-11 TO 7'-4	173	48 VAR.	2 EA. 1'-11 TO 6'-4	132	4c7
4c8	INTERIOR WALLS, BOTH F.V.		4	12'-7	34	4	11'-7	31	4	10'-7	28	4	9'-7	26	4	8'-7	23	4	7'-7	20	4	6'-7	18	4c8
5c9	WINGWALL, B.F.V. LONG		9 VAR.	2'-10 TO 5'-2	38	9 VAR.	2'-10 TO 5'-2	38	9 VAR.	2'-10 TO 5'-2	38	9 VAR.	2'-10 TO 5'-2	38	9 VAR.	2'-10 TO 5'-2	38	9 VAR.	2'-10 TO 5'-2	38	9 VAR.	2'-10 TO 5'-2	38	5c9
5c10	WINGWALL, B.F.V. SHORT		6 VAR.	2'-10 TO 4'-6	23	6 VAR.	2'-10 TO 4'-6	23	6 VAR.	2'-10 TO 4'-6	23	6 VAR.	2'-10 TO 4'-6	23	6 VAR.	2'-10 TO 4'-6	23	6 VAR.	2'-10 TO 4'-6	23	6 VAR.	2'-10 TO 4'-6	23	5c10
5c11	WINGWALL, B.F.V. LONG		33 VAR.	9'-6 TO 18'-10	488	30 VAR.	9'-6 TO 17'-11	429	26 VAR.	9'-6 TO 16'-9	356	23 VAR.	9'-6 TO 15'-11	305	20 VAR.	9'-6 TO 15'-0	256	16 VAR.	9'-6 TO 13'-10	195	13 VAR.	9'-6 TO 13'-0	153	5c11
5c12	WINGWALL, B.F.V. SHORT		31 VAR.	8'-10 TO 18'-10	447	28 VAR.	8'-10 TO 17'-10	389	25 VAR.	8'-10 TO 16'-10	335	22 VAR.	8'-10 TO 15'-10	283	19 VAR.	8'-10 TO 14'-10	235	16 VAR.	8'-10 TO 13'-10	189	13 VAR.	8'-10 TO 12'-10	147	5c12
6c13	WINGWALL, B.F.V. LONG		27	10'-6	426	24	10'-6	379	20	10'-6	315	17	10'-6	268	14	10'-6	221	10	10'-6	158	7	10'-6	110	6c13
6c13	WINGWALL, B.F.V. SHORT		24	10'-6	379	21	10'-6	331	18	10'-6	284	15	10'-6	237	12	10'-6	189	9	10'-6	142	6	10'-6	95	6c13
5c14	WINGWALL, B.F.V. LONG		2	17'-9	37	1	16'-9	17	2	15'-9	33	2	14'-9	31	1	13'-9	14	2	12'-9	27	1	11'-9	12	5c14
5c14	WINGWALL, B.F.V. SHORT		2	17'-9	37	2	16'-9	35	2	15'-9	33	2	14'-9	31	2	13'-9	29	2	12'-9	27	2	11'-9	25	5c14
4d1	APRON, LONGIT., BOTT.		25	28'-5	475	25	26'-4	440	25	24'-4	406	25	22'-3	372	25	20'-2	337	25	18'-1	302	25	16'-0	267	4d1
4d2	APRON, LONGIT., BOTT. LONG		3	39'-7	79	3	36'-2	72	3	32'-9	66	3	29'-5	59	3	26'-0	52	3	22'-7	45	3	19'-3	39	4d2
4d3	APRON, LONGIT., BOTT. SHORT		3	35'-0	70	3	32'-0	64	3	29'-0	58	3	26'-1	52	3	23'-1	46	3	20'-2	40	3	17'-3	35	4d3
6f1	APRON, LONGIT., TOP		37	28'-5	1579	37	26'-4	1463	37	24'-4	1352	37	22'-3	1237	37	20'-2	1121	37	18'-1	1005	37	16'-0	889	6f1
6f2	APRON, LONGIT., TOP LONG		9 VAR.	5'-5 TO 25'-7	210	8 VAR.	5'-10 TO 23'-6	176	7 VAR.	6'-3 TO 21'-5	145	6 VAR.	6'-8 TO 19'-5	118	5 VAR.	7'-2 TO 17'-4	92	4 VAR.	7'-7 TO 15'-3	69	4 VAR.	5'-6 TO 13'-2	56	6f2
6f3	APRON, LONGIT., TOP SHORT		8 VAR.	5'-5 TO 25'-8	187	7 VAR.	6'-3 TO 23'-8	157	6 VAR.	7'-0 TO 21'-7	129	6 VAR.	4'-11 TO 19'-6	110	5 VAR.	5'-9 TO 17'-5	87	4 VAR.	6'-7 TO 15'-4	66	4 VAR.	4'-5 TO 13'-3	53	6f3
6f4	APRON, LONGIT., TOP LONG		1	45'-1	71	1	41'-8	66	1	38'-3	57	1	34'-10	52	1	31'-4	47	1	27'-11	42	1	24'-6	37	6f4
6f5	APRON, LONGIT., TOP SHORT		1	39'-9	60	1	36'-9	55	1	33'-9	51	1	30'-9	46	1	27'-9	42	1	24'-9	37	1	21'-9	33	6f5
4i1	PARAPET, VERTICAL		77	6'-2	317	75	6'-2	309	75	6'-2	309	75	6'-2	309	75	6'-2	309	75	6'-2	309	75	6'-2	309	4i1
7ji	PARAPET, HORIZONTAL		4	41'-0	354	4	40'-8	351	4	40'-4	348	4	40'-4	348	4	40'-4	348	4	40'-0	327	4	40'-0	327	7ji
6m1	APRON, TRANS., TOP		8 VAR.	41'-3 TO 42'-7	531	8 VAR.	40'-11 TO 42'-3	527	8 VAR.	40'-7 TO 41'-11	523	8 VAR.	40'-7 TO 41'-11	523	8 VAR.	40'-7 TO 41'-11	523	8 VAR.	40'-3 TO 41'-7	519	8 VAR.	40'-3 TO 41'-7	519	6m1
6m2	APRON, TRANS., TOP		21 VAR.	42'-10 TO 50'-4	1540	18 VAR.	42'-6 TO 48'-11	1297	15 VAR.	42'-2 TO 47'-5	1060	12 VAR.	42'-2 TO 46'-3	837	10 VAR.	42'-2 TO 45'-6	692	7 VAR.	41'-10 TO 44'-1	475	4 VAR.	41'-10 TO 42'-11	268	6m2
6m3	APRON, TRANS., TOP		13 VAR.	8'-10 TO 40'-2	482	13 VAR.	8'-9 TO 40'-1	480	14 VAR.	6'-1 TO 40'-1	489	14 VAR.	6'-3 TO 40'-2	491	13 VAR.	6'-4 TO 37'-8	430	13 VAR.	6'-3 TO 37'-7	428	14 VAR.	3'-9 TO 37'-9	436	6m3
6m4	APRON, TRANS., BOTT.		24 VAR.	34'-11 TO 47'-4	1530	22 VAR.	34'-9 TO 46'-1	1376	20 VAR.	34'-7 TO 44'-10	1223	18 VAR.	34'-7 TO 43'-9	1083	16 VAR.	34'-7 TO 42'-8	945	14 VAR.	34'-5 TO 41'-5	807	12 VAR.	34'-5 TO 40'-4	677	6m4
6p1	CURTAIN, HORIZONTAL		4	39'-7	238	4	39'-5	237	4	39'-3	236	4	39'-3	236	4	39'-3	236	4	39'-1	235	4	39'-1	235	6p1
6p2	CURTAIN, HORIZONTAL LONG		4	21'-9	131	4	20'-3	122	4	18'-9	113	4	17'-3	104	4	15'-9	95	4	14'-2	85	4	12'-8	76	6p1
6p3	CURTAIN, HORIZONTAL SHORT		4	16'-10	101	4	15'-9	95	4	14'-7	88	4	13'-6	81	4	12'-5	75	4	11'-3	68	4	10'-2	61	6p2
6s1	WING SLOPE, BOTH F. LONG		2	6'-11	21	2	6'-11	21	2	6'-11	21	2	6'-11	21	2	6'-11	21	2	6'-11	21	2	6'-11	21	6s1
6s2	WING SLOPE, BOTH F. SHORT		2	6'-6	20	2	6'-6	20	2	6'-6	20	2	6'-6	20	2	6'-6	20	2	6'-6	20	2	6'-6	20	6s2
6s3	WING SLOPE, BOTH F. LONG		2	41'-9	132	2	38'-2	115	2	34'-7	104	2	31'-0	93	2	27'-5	82	2	23'-10	72	2	20'-3	61	6s3
6s4	WING SLOPE, BOTH F. SHORT		2	37'-4	112	2	34'-2	103	2	31'-0	93	2	27'-10	84	2	24'-8	74	2	21'-6	65	2	18'-4	55	6s4
6s5	WING SLOPE, F.F. LONG		1	45'-11	72	1	42'-4	67	1	38'-9	58	1	35'-2	53	1	31'-8	48	1	28'-1	42	1	24'-6	37	6s5
6s6	WING SLOPE, F.F. SHORT		1	41'-2	65	1	38'-0	57	1	34'-10	52	1	31'-8	48	1	28'-6	43	1	25'-4	38	1	22'-2	33	6s6
6s7	INTERIOR WALLS, BOTH F.H.		4	30'-4	182	4	28'-1	169	4	25'-10	155	4	23'-6	141	4	21'-3	128	4	18'-11	114	4	16'-8	100	6s7
5t1	CURTAIN, VERTICAL		52	7'-11	429	50	7'-8	400	48	7'-5	371	47	7'-2	351	45	6'-11	325	42	6'-8	292	40	6'-5	268	5t1
ESTIMATED QUANTITIES ONE HEADWALL	REINF. STEEL			13,983 LB			12,535 LB			11,164 LB			9921 LB			8625 LB			7438 LB			6377 LB		
	CONCRETE	PARAPET Δ	4.0			3.9			3.8			3.8			3.8			3.7			3.7			
		WINGWALLS	35.6	117.6 CY		28.0	101.9 CY		21.5	87.6 CY		17.8	77.0 CY		14.4	67.1 CY		10.3	55.8 CY		7.9	47.7 CY		
		FOOTING *	78.0			70.0			62.3			55.4			48.9			41.8			36.1			

BENT BAR DETAILS

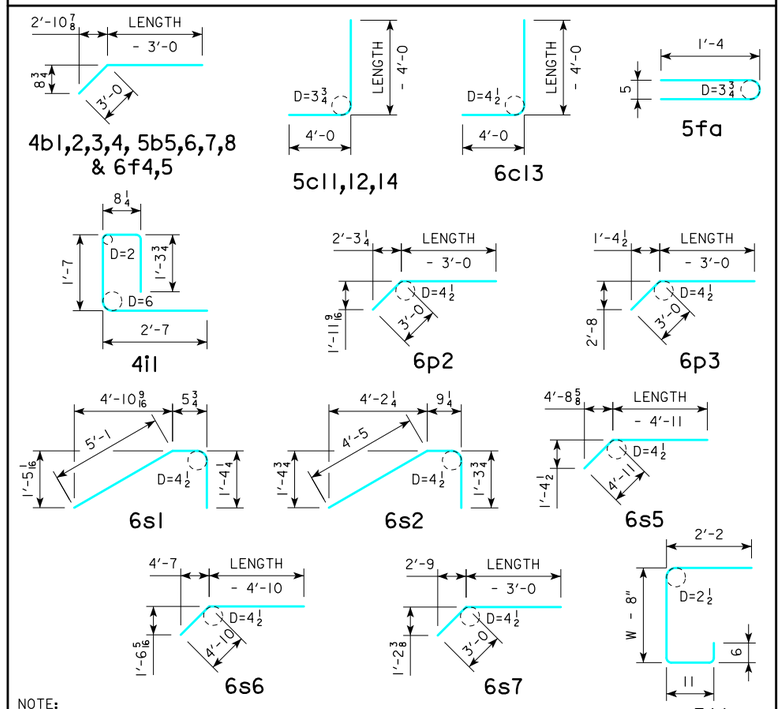

NOTE:
ALL DIMENSIONS ARE OUT TO OUT. D = PIN DIAMETER.

Δ INCLUDES TOP OF WINGWALL QUANTITIES.
* ASSUMES APRON AND FLOOR ARE EQUAL THICKNESS, ADJUST CONCRETE QUANTITIES FOR TRANSITION WHERE APRON AND FLOOR THICKNESS ARE NOT EQUAL.

NOTE:
WEIGHT OF BARS OVER 40'-0 LONG INCLUDES AN ALLOWANCE OF 2'-3 FOR LAP.
LENGTHS SHOWN FOR BARS OVER 40'-0 LONG DO NOT INCLUDE LAP.

"SHORT" DENOTES SHORT WINGWALL
"LONG" DENOTES LONG WINGWALL

HEADWALL NOTES:

1. SEE DRAWING TRRCB G1-12 FOR GENERAL INFORMATION, SPECIFICATIONS, AND DESIGN STRESSES.
2. THIS HEADWALL IS BASED ON A 3:1 SLOPE NORMAL TO CENTERLINE OF ROADWAY.
3. THE SIDES OF THE FOOTING ARE TO BE FORMED TO INSURE CORRECT LINE AND GRADE.
4. ALL SLAB AND FLOOR REINFORCING STEEL IS TO BE SUPPORTED BY BAR CHAIRS AT INTERVALS OF NOT MORE THAN 3'-0 IN EITHER DIRECTION AS OUTLINED IN THE STANDARD SPECIFICATIONS.
5. CLEAR DISTANCE FROM FACE OF CONCRETE TO NEAR REINFORCING BAR IS TO BE 2" UNLESS OTHERWISE NOTED OR SHOWN. CLEARANCE TO THE BOTTOM ENDS OF VERTICAL BARS SHALL BE 3 INCHES.
6. CONCRETE QUANTITIES ARE ESTIMATED FROM BACK OF PARAPET.
7. HORIZONTAL TAILS OF BARS "b" & "s" ESTIMATED TO EXTEND 2'-0 BEYOND BACK OF PARAPET (INTO END OF BARREL). LONGITUDINAL BARS "d", "6f1", AND "6f3" ESTIMATED TO PROJECT INTO END SECTION OF BARREL A MINIMUM OF 2'-0 BEYOND BACK OF PARAPET.
8. THE "LENGTH" COLUMN REFLECTS TOTAL NUMBER OF FEET NECESSARY TO MEET THESE REQUIREMENTS.

LATEST REVISION DATE

APPROVED BY BRIDGE ENGINEER

IOWA DOT Highway Division

STANDARD DESIGN

TRIPLE REINFORCED CONCRETE BOX CULVERTS

APRIL, 2012

FLARED WING HEADWALLS

15° SKEW

TRH 15-7-12

BILL OF REINFORCING FOR ONE HEADWALL 15° SKEW CULVERT SPAN x CULVERT HEIGHT

BAR	LOCATION	SHAPE	12' x 5' NO.	12' x 5' LENGTH	12' x 5' WT.	12' x 4' NO.	12' x 4' LENGTH	12' x 4' WT.	10' x 12' NO.	10' x 12' LENGTH	10' x 12' WT.	10' x 11' NO.	10' x 11' LENGTH	10' x 11' WT.	10' x 10' NO.	10' x 10' LENGTH	10' x 10' WT.	10' x 9' NO.	10' x 9' LENGTH	10' x 9' WT.	10' x 8' NO.	10' x 8' LENGTH	10' x 8' WT.	BAR
5fa	FENCE ANCHOR (GALV.)		2	2'-10	6	2	2'-10	6	2	2'-10	6	2	2'-10	6	2	2'-10	6	2	2'-10	6	2	2'-10	6	5fa
4b1	WINGWALL, B.F.H. LONG		1	21'-0	14	1	17'-7	12	1	45'-0	32	1	41'-7	29	1	38'-2	25	1	34'-9	23	1	31'-4	21	4b1
4b2	WINGWALL, B.F.H. SHORT		1	18'-9	13	1	15'-9	11	1	39'-8	26	1	36'-9	25	1	33'-9	23	1	30'-9	21	1	27'-9	19	4b2
4b3	WINGWALL, B.F.H. LONG		3 VAR.	12'-7 TO 19'-6	32	2 VAR.	12'-7 TO 16'-0	19	10 VAR.	12'-7 TO 43'-5	189	9 VAR.	12'-7 TO 40'-0	158	8 VAR.	12'-7 TO 36'-7	131	7 VAR.	12'-7 TO 33'-2	107	6 VAR.	12'-7 TO 29'-9	85	4b3
4b4	WINGWALL, B.F.H. SHORT		3 VAR.	11'-4 TO 17'-4	29	2 VAR.	11'-4 TO 14'-4	17	10 VAR.	11'-4 TO 38'-4	166	9 VAR.	11'-4 TO 35'-4	140	8 VAR.	11'-4 TO 32'-4	117	7 VAR.	11'-4 TO 29'-4	95	6 VAR.	11'-4 TO 26'-4	75	4b4
5b5	WINGWALL, F.F.H. LONG		1	21'-1	22	1	17'-8	18	1	45'-1	49	1	41'-8	46	1	38'-3	40	1	34'-10	36	1	31'-4	33	5b5
5b6	WINGWALL, F.F.H. SHORT		1	18'-9	20	1	15'-9	16	1	39'-9	41	1	36'-9	38	1	33'-9	35	1	30'-9	32	1	27'-9	29	5b6
5b7	WINGWALL, F.F.H. LONG		4 VAR.	9'-3 TO 19'-6	60	3 VAR.	9'-2 TO 16'-1	40	11 VAR.	9'-3 TO 43'-6	307	10 VAR.	9'-3 TO 40'-1	260	9 VAR.	9'-3 TO 36'-8	216	8 VAR.	9'-3 TO 33'-3	177	7 VAR.	9'-3 TO 29'-10	143	5b7
5b8	WINGWALL, F.F.H. SHORT		4 VAR.	8'-5 TO 17'-5	54	3 VAR.	8'-5 TO 14'-5	36	11 VAR.	8'-5 TO 38'-5	269	10 VAR.	8'-5 TO 35'-5	229	9 VAR.	8'-5 TO 32'-5	192	8 VAR.	8'-5 TO 29'-5	158	7 VAR.	8'-5 TO 26'-5	127	5b8
5b9	INTERIOR WALLS, BOTH F.H.		14 VAR.	2 EA. 5'-5 TO 13'-7	139	10 VAR.	2 EA. 5'-7 TO 11'-5	89	42 VAR.	2 EA. 5'-1 TO 28'-1	726	38 VAR.	2 EA. 5'-1 TO 26'-0	616	34 VAR.	2 EA. 5'-1 TO 23'-11	514	30 VAR.	2 EA. 5'-2 TO 21'-10	422	26 VAR.	2 EA. 5'-2 TO 19'-9	338	5b9
4c1	WINGWALL, F.F.V. LONG		18 VAR.	2'-10 TO 7'-10	64	15 VAR.	2'-10 TO 6'-11	49	42 VAR.	2'-9 TO 14'-9	245	39 VAR.	2'-9 TO 13'-10	216	35 VAR.	2'-9 TO 12'-8	180	32 VAR.	2'-9 TO 11'-10	156	29 VAR.	2'-9 TO 10'-11	132	4c1
4c2	WINGWALL, F.F.V. SHORT		16 VAR.	2'-10 TO 7'-10	57	13 VAR.	2'-10 TO 6'-10	42	37 VAR.	2'-9 TO 14'-9	216	34 VAR.	2'-9 TO 13'-9	187	31 VAR.	2'-9 TO 12'-9	160	28 VAR.	2'-9 TO 11'-9	136	25 VAR.	2'-9 TO 10'-9	113	4c2
4c3	WINGWALL, F.F.V. LONG		---	---	---	---	---	---	19 VAR.	9'-7 TO 14'-10	155	16 VAR.	9'-7 TO 14'-0	126	12 VAR.	9'-7 TO 12'-10	90	9 VAR.	9'-7 TO 11'-11	65	---	---	---	4c3
4c4	WINGWALL, F.F.V. SHORT		---	---	---	---	---	---	17 VAR.	9'-7 TO 14'-11	139	14 VAR.	9'-7 TO 13'-11	110	11 VAR.	9'-7 TO 12'-11	83	8 VAR.	9'-7 TO 11'-11	57	---	---	---	4c4
4c5	WINGWALL, F.F.V. LONG		2	6'-9	9	2	5'-9	8	2	13'-8	18	1	12'-8	8	2	11'-8	16	2	10'-8	14	1	9'-8	6	4c5
4c5	WINGWALL, F.F.V. SHORT		2	6'-9	9	2	5'-9	8	2	13'-8	18	2	12'-8	17	2	11'-8	16	2	10'-8	14	2	9'-8	13	4c5
4c6	INTERIOR WALLS, BOTH F.V.		4	1'-9	5	4	1'-8	4	4	1'-8	4	4	1'-8	4	4	1'-8	4	4	1'-8	4	4	1'-8	4	4c6
4c7	INTERIOR WALLS, BOTH F.V.		40 VAR.	2 EA. 1'-11 TO 5'-5	98	32 VAR.	2 EA. 1'-10 TO 4'-5	67	98 VAR.	2 EA. 1'-11 TO 12'-4	466	90 VAR.	2 EA. 1'-10 TO 11'-4	396	82 VAR.	2 EA. 1'-10 TO 10'-4	333	74 VAR.	2 EA. 1'-10 TO 9'-5	278	66 VAR.	2 EA. 1'-10 TO 8'-5	226	4c7
4c8	INTERIOR WALLS, BOTH F.V.		4	5'-7	15	4	4'-7	12	4	12'-6	33	4	11'-6	31	4	10'-6	28	4	9'-6	25	4	8'-6	23	4c8
5c9	WINGWALL, B.F.V. LONG		9 VAR.	2'-10 TO 5'-2	38	9 VAR.	2'-10 TO 5'-2	38	9 VAR.	2'-9 TO 5'-1	37	9 VAR.	2'-9 TO 5'-1	37	9 VAR.	2'-9 TO 5'-1	37	9 VAR.	2'-9 TO 5'-1	37	9 VAR.	2'-9 TO 5'-1	37	5c9
5c10	WINGWALL, B.F.V. SHORT		6 VAR.	2'-10 TO 4'-6	23	6 VAR.	2'-10 TO 4'-6	23	6 VAR.	2'-9 TO 4'-5	22	6 VAR.	2'-9 TO 4'-5	22	6 VAR.	2'-9 TO 4'-5	22	6 VAR.	2'-9 TO 4'-5	22	6 VAR.	2'-9 TO 4'-5	22	5c10
5c11	WINGWALL, B.F.V. LONG		9 VAR.	9'-6 TO 11'-10	100	6 VAR.	9'-6 TO 10'-11	64	33 VAR.	9'-5 TO 18'-9	485	30 VAR.	9'-5 TO 17'-10	426	26 VAR.	9'-5 TO 16'-8	354	23 VAR.	9'-5 TO 15'-10	303	20 VAR.	9'-5 TO 14'-11	254	5c11
5c12	WINGWALL, B.F.V. SHORT		10 VAR.	8'-10 TO 11'-10	108	7 VAR.	8'-10 TO 10'-10	72	31 VAR.	8'-9 TO 18'-9	445	28 VAR.	8'-9 TO 17'-9	387	25 VAR.	8'-9 TO 16'-9	332	22 VAR.	8'-9 TO 15'-9	281	19 VAR.	8'-9 TO 14'-9	233	5c12
6c13	WINGWALL, B.F.V. LONG		---	---	---	---	---	---	27	10'-6	426	24	10'-6	379	20	10'-6	315	17	10'-6	268	14	10'-6	221	6c13
6c13	WINGWALL, B.F.V. SHORT		---	---	---	---	---	---	24	10'-6	379	21	10'-6	331	18	10'-6	284	15	10'-6	237	12	10'-6	189	6c13
5c14	WINGWALL, B.F.V. LONG		2	10'-9	22	2	9'-9	20	2	17'-8	37	1	16'-8	17	2	15'-8	33	2	14'-8	31	1	13'-8	14	5c14
5c14	WINGWALL, B.F.V. SHORT		2	10'-9	22	2	9'-9	20	2	17'-8	37	2	16'-8	35	2	15'-8	33	2	14'-8	31	2	13'-8	29	5c14
4d1	APRON, LONGIT., BOTT.		25	13'-11	232	25	11'-11	199	21	28'-5	399	21	26'-4	369	21	24'-4	341	21	22'-3	312	21	20'-2	283	4d1
4d2	APRON, LONGIT., BOTT. LONG		3	15'-11	32	3	12'-7	25	3	39'-7	79	3	36'-2	72	3	32'-9	66	3	29'-5	59	3	26'-0	52	4d2
4d3	APRON, LONGIT., BOTT. SHORT		3	14'-4	29	3	11'-5	23	3	35'-0	70	3	32'-0	64	3	29'-0	58	3	26'-1	52	3	23'-1	46	4d3
6f1	APRON, LONGIT., TOP		37	13'-11	773	37	11'-11	662	31	28'-5	1323	31	26'-4	1226	31	24'-4	1133	31	22'-3	1036	31	20'-2	939	6f1
6f2	APRON, LONGIT., TOP LONG		3 VAR.	5'-11 TO 11'-1	38	2 VAR.	6'-5 TO 9'-0	23	9 VAR.	5'-5 TO 25'-7	210	8 VAR.	5'-10 TO 23'-6	176	7 VAR.	6'-3 TO 21'-5	145	6 VAR.	6'-8 TO 19'-5	118	5 VAR.	7'-2 TO 17'-4	92	6f2
6f3	APRON, LONGIT., TOP SHORT		3 VAR.	5'-3 TO 11'-2	37	2 VAR.	6'-2 TO 9'-1	23	8 VAR.	5'-5 TO 25'-8	187	7 VAR.	6'-3 TO 23'-8	157	6 VAR.	7'-0 TO 21'-7	129	6 VAR.	4'-11 TO 19'-6	110	5 VAR.	5'-9 TO 17'-5	87	6f3
6f4	APRON, LONGIT., TOP LONG		1	21'-1	32	1	17'-8	27	1	45'-1	71	1	41'-8	66	1	38'-3	57	1	34'-10	52	1	31'-4	47	6f4
6f5	APRON, LONGIT., TOP SHORT		1	18'-9	28	1	15'-9	24	1	39'-9	60	1	36'-9	55	1	33'-9	51	1	30'-9	46	1	27'-9	42	6f5
4i1	PARAPET, VERTICAL		75	6'-2	309	75	6'-2	309	65	6'-2	268	63	6'-2	260	63	6'-2	260	63	6'-2	260	63	6'-2	260	4i1
7ji	PARAPET, HORIZONTAL		4	40'-0	327	4	40'-0	327	4	34'-10	285	4	34'-6	282	4	34'-1	279	4	34'-1	279	4	34'-1	279	7ji
6m1	APRON, TRANS., TOP		8 VAR.	40'-3 TO 41'-7	519	7 VAR.	40'-3 TO 41'-4	453	7 VAR.	35'-1 TO 36'-2	375	7 VAR.	34'-9 TO 35'-10	371	7 VAR.	34'-4 TO 35'-6	367	7 VAR.	34'-4 TO 35'-6	367	7 VAR.	34'-4 TO 35'-6	367	6m1
6m2	APRON, TRANS., TOP		1 VAR.	41'-10 TO 41'-10	66	1 VAR.	35'-5 TO 35'-5	53	23 VAR.	36'-6 TO 44'-9	1447	20 VAR.	36'-2 TO 43'-3	1223	17 VAR.	35'-9 TO 41'-9	1006	14 VAR.	35'-9 TO 40'-8	810	12 VAR.	35'-9 TO 39'-11	682	6m2
6m3	APRON, TRANS., TOP		14 VAR.	3'-10 TO 37'-10	438	12 VAR.	4'-0 TO 32'-8	330	11 VAR.	8'-8 TO 34'-9	359	11 VAR.	8'-7 TO 34'-8	357	12 VAR.	5'-11 TO 34'-8	366	12 VAR.	6'-0 TO 34'-9	367	11 VAR.	6'-2 TO 32'-3	317	6m3
6m4	APRON, TRANS., BOTT.		10 VAR.	34'-5 TO 39'-3	553	8 VAR.	34'-5 TO 38'-2	436	24 VAR.	28'-8 TO 41'-1	1267	22 VAR.	28'-6 TO 39'-10	1129	20 VAR.	28'-4 TO 38'-7	1005	18 VAR.	28'-4 TO 37'-6	890	16 VAR.	28'-4 TO 36'-5	778	6m4
6p1	CURTAIN, HORIZONTAL		4	39'-0	234	4	39'-0	234	4	33'-5	201	4	33'-2	199	4	33'-0	198	4	33'-0	198	4	33'-0	198	6p1
6p2	CURTAIN, HORIZONTAL LONG		4	11'-2	67	4	9'-8	58	4	21'-9	131	4	20'-3	122	4	18'-9	113	4	17'-3	104	4	15'-9	95	6p1
6p3	CURTAIN, HORIZONTAL SHORT		4	9'-1	55	4	7'-11	48	4	16'-10	101	4	15'-9	95	4	14'-7	88	4	13'-6	81	4	12'-5	75	6p2
6s1	WING SLOPE, BOTH F. LONG		2	6'-11	21	2	6'-11	21	2	6'-11	21	2	6'-11	21	2	6'-11	21	2	6'-11	21	2	6'-11	21	6s1
6s2	WING SLOPE, BOTH F. SHORT		2	6'-6	20	2	6'-6	20	2	6'-6	20	2	6'-6	20	2	6'-6	20	2	6'-6	20	2	6'-6	20	6s2
6s3	WING SLOPE, BOTH F. LONG		2	16'-9	50	2	13'-2	40	2	41'-9	132	2	38'-2	115	2	34'-7	104	2	31'-0	93	2	27'-5	82	6s3
6s4	WING SLOPE, BOTH F. SHORT		2	15'-2	46	2	12'-0	36	2	37'-4	112	2	34'-2	103	2	31'-0	93	2	27'-10	84	2	24'-8	74	6s4
6s5	WING SLOPE, F.F. LONG		1	20'-11	31	1	17'-4	26	1	45'-11	72	1	42'-4	67	1	38'-9	58	1	35'-2	53	1	31'-8	48	6s5
6s6	WING SLOPE, F.F. SHORT		1	19'-0	29	1	15'-10	24	1	41'-2	65	1	38'-0	57	1	34'-10	52	1	31'-8	48	1	28'-6	43	6s6
6s7	INTERIOR WALLS, BOTH F.H.		4	14'-4	86	4	12'-1	73	4	30'-4	182	4	28'-1	169	4	25'-10	155	4	23'-6	141	4	21'-3	128	6s7
5t1	CURTAIN, VERTICAL		38	6'-5	254	36	6'-5	241	46	7'-11	380	44	7'-8	352	42	7'-5	325	41	7'-2	306	39	6'-11	281	5t1
ESTIMATED QUANTITIES ONE HEADWALL	REINF. STEEL		5265 LB			4426 LB			12,790 LB			11,403 LB			10,109 LB			8943 LB			7728 LB			
	CONCRETE	PARAPET △	3.7	40.4 CY		3.7	33.5 CY		3.5	105.6 CY		3.4	90.9 CY		3.3	77.6 CY		3.3	68.0 CY		3.3	58.9 CY		
		WINGWALLS	5.8			3.9			35.6			28.0			21.5			17.8			14.4			
		FOOTING *	30.9			25.9			66.5			59.5			52.8			46.9			41.2			

BENT BAR DETAILS

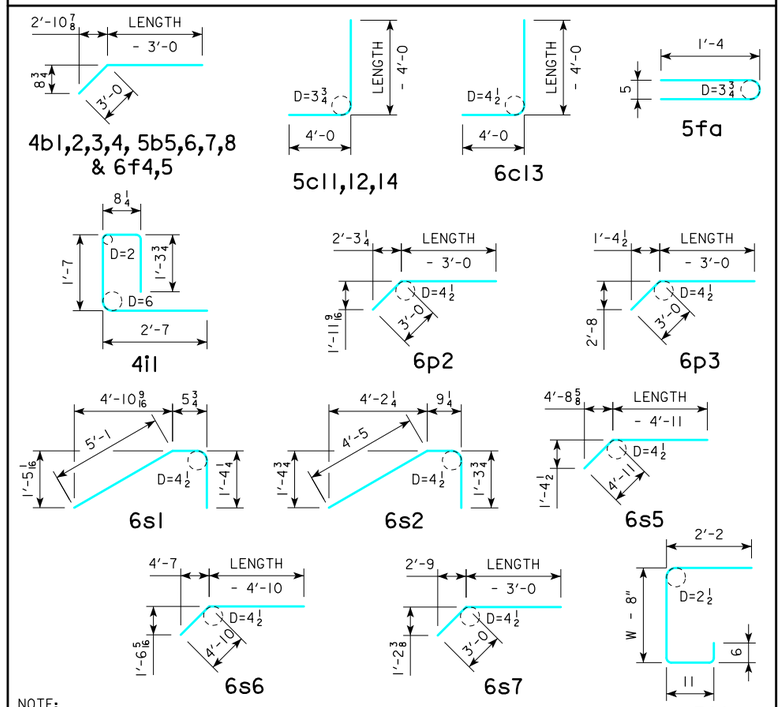

△ INCLUDES TOP OF WINGWALL QUANTITIES.
* ASSUMES APRON AND FLOOR ARE EQUAL THICKNESS, ADJUST CONCRETE QUANTITIES FOR TRANSITION WHERE APRON AND FLOOR THICKNESS ARE NOT EQUAL.

NOTE:
WEIGHT OF BARS OVER 40'-0 LONG INCLUDES AN ALLOWANCE OF 2'-3 FOR LAP.
LENGTHS SHOWN FOR BARS OVER 40'-0 LONG DO NOT INCLUDE LAP.

"SHORT" DENOTES SHORT WINGWALL
"LONG" DENOTES LONG WINGWALL

HEADWALL NOTES:

1. SEE DRAWING TRRCB G1-12 FOR GENERAL INFORMATION, SPECIFICATIONS, AND DESIGN STRESSES.
2. THIS HEADWALL IS BASED ON A 3:1 SLOPE NORMAL TO CENTERLINE OF ROADWAY.
3. THE SIDES OF THE FOOTING ARE TO BE FORMED TO INSURE CORRECT LINE AND GRADE.
4. ALL SLAB AND FLOOR REINFORCING STEEL IS TO BE SUPPORTED BY BAR CHAIRS AT INTERVALS OF NOT MORE THAN 3'-0 IN EITHER DIRECTION AS OUTLINED IN THE STANDARD SPECIFICATIONS.
5. CLEAR DISTANCE FROM FACE OF CONCRETE TO NEAR REINFORCING BAR IS TO BE 2" UNLESS OTHERWISE NOTED OR SHOWN. CLEARANCE TO THE BOTTOM ENDS OF VERTICAL BARS SHALL BE 3 INCHES.
6. CONCRETE QUANTITIES ARE ESTIMATED FROM BACK OF PARAPET.
7. HORIZONTAL TAILS OF BARS "b" & "s" ESTIMATED TO EXTEND 2'-0 BEYOND BACK OF PARAPET (INTO END OF BARREL). LONGITUDINAL BARS "d", "6f1", AND "6f3" ESTIMATED TO PROJECT INTO END SECTION OF BARREL A MINIMUM OF 2'-0 BEYOND BACK OF PARAPET.
8. THE "LENGTH" COLUMN REFLECTS TOTAL NUMBER OF FEET NECESSARY TO MEET THESE REQUIREMENTS.

LATEST REVISION DATE

APPROVED BY BRIDGE ENGINEER

IOWA DOT Highway Division

STANDARD DESIGN

TRIPLE REINFORCED CONCRETE BOX CULVERTS

APRIL, 2012

FLARED WING HEADWALLS

15° SKEW

TRH 15-8-12

BILL OF REINFORCING FOR ONE HEADWALL 15° SKEW CULVERT SPAN x CULVERT HEIGHT

BAR	LOCATION	SHAPE	10′ x 7′ NO.	10′ x 7′ LENGTH	10′ x 7′ WT.	10′ x 6′ NO.	10′ x 6′ LENGTH	10′ x 6′ WT.	10′ x 5′ NO.	10′ x 5′ LENGTH	10′ x 5′ WT.	10′ x 4′ NO.	10′ x 4′ LENGTH	10′ x 4′ WT.	BAR
5fa	FENCE ANCHOR (GALV.)		2	2′-10	6	2	2′-10	6	2	2′-10	6	2	2′-10	6	5fa
4b1	WINGWALL, B.F.H. LONG		1	27′-11	19	1	24′-6	16	1	21′-0	14	1	17′-7	12	4b1
4b2	WINGWALL, B.F.H. SHORT		1	24′-9	17	1	21′-9	15	1	18′-9	13	1	15′-9	11	4b2
4b3	WINGWALL, B.F.H. LONG		5 VAR.	12′-7 TO 26′-4	65	4 VAR.	12′-7 TO 22′-11	47	3 VAR.	12′-7 TO 19′-6	32	2 VAR.	12′-7 TO 16′-0	19	4b3
4b4	WINGWALL, B.F.H. SHORT		5 VAR.	11′-4 TO 23′-4	58	4 VAR.	11′-4 TO 20′-4	42	3 VAR.	11′-4 TO 17′-4	29	2 VAR.	11′-4 TO 14′-4	17	4b4
5b5	WINGWALL, F.F.H. LONG		1	27′-11	29	1	24′-6	26	1	21′-1	22	1	17′-8	18	5b5
5b6	WINGWALL, F.F.H. SHORT		1	24′-9	26	1	21′-9	23	1	18′-9	20	1	15′-9	16	5b6
5b7	WINGWALL, F.F.H. LONG		6 VAR.	9′-3 TO 26′-4	111	5 VAR.	9′-3 TO 22′-11	84	4 VAR.	9′-3 TO 19′-6	60	3 VAR.	9′-2 TO 16′-1	40	5b7
5b8	WINGWALL, F.F.H. SHORT		6 VAR.	8′-5 TO 23′-5	100	5 VAR.	8′-5 TO 20′-5	75	4 VAR.	8′-5 TO 17′-5	54	3 VAR.	8′-5 TO 14′-5	36	5b8
5b9	INTERIOR WALLS, BOTH F.H.		22 VAR.	2 EA. 5′-3 TO 17′-9	264	18 VAR.	2 EA. 5′-4 TO 15′-8	197	14 VAR.	2 EA. 5′-5 TO 13′-7	139	10 VAR.	2 EA. 5′-7 TO 11′-5	89	5b9
4c1	WINGWALL, F.F.V. LONG		25 VAR.	2′-9 TO 9′-9	104	22 VAR.	2′-9 TO 8′-11	86	18 VAR.	2′-9 TO 7′-9	63	15 VAR.	2′-9 TO 6′-10	48	4c1
4c2	WINGWALL, F.F.V. SHORT		22 VAR.	2′-9 TO 9′-9	92	19 VAR.	2′-9 TO 8′-9	73	16 VAR.	2′-9 TO 7′-9	56	13 VAR.	2′-9 TO 6′-9	41	4c2
4c3	WINGWALL, F.F.V. LONG		---	---	---	---	---	---	---	---	---	---	---	---	4c3
4c4	WINGWALL, F.F.V. SHORT		---	---	---	---	---	---	---	---	---	---	---	---	4c4
4c5	WINGWALL, F.F.V. LONG		2	8′-8	12	1	7′-8	5	2	6′-8	9	2	5′-8	8	4c5
4c5	WINGWALL, F.F.V. SHORT		2	8′-8	12	2	7′-8	10	2	6′-8	9	2	5′-8	8	4c5
4c6	INTERIOR WALLS, BOTH F.V.		4	1′-8	4	4	1′-8	4	4	1′-8	4	4	1′-7	4	4c6
4c7	INTERIOR WALLS, BOTH F.V.		56 VAR.	2 EA. 1′-10 TO 7′-3	170	48 VAR.	2 EA. 1′-10 TO 6′-3	130	40 VAR.	2 EA. 1′-10 TO 5′-4	96	32 VAR.	2 EA. 1′-9 TO 4′-4	65	4c7
4c8	INTERIOR WALLS, BOTH F.V.		4	7′-6	20	4	6′-6	17	4	5′-6	15	4	4′-6	12	4c8
5c9	WINGWALL, B.F.V. LONG		9 VAR.	2′-9 TO 5′-1	37	9 VAR.	2′-9 TO 5′-1	37	9 VAR.	2′-9 TO 5′-1	37	9 VAR.	2′-9 TO 5′-1	37	5c9
5c10	WINGWALL, B.F.V. SHORT		6 VAR.	2′-9 TO 4′-5	22	6 VAR.	2′-9 TO 4′-5	22	6 VAR.	2′-9 TO 4′-5	22	6 VAR.	2′-9 TO 4′-5	22	5c10
5c11	WINGWALL, B.F.V. LONG		16 VAR.	9′-5 TO 13′-9	193	13 VAR.	9′-5 TO 12′-11	151	9 VAR.	9′-5 TO 11′-9	99	6 VAR.	9′-5 TO 10′-10	63	5c11
5c12	WINGWALL, B.F.V. SHORT		16 VAR.	8′-9 TO 13′-9	188	13 VAR.	8′-9 TO 12′-9	146	10 VAR.	8′-9 TO 11′-9	107	7 VAR.	8′-9 TO 10′-9	71	5c12
6c13	WINGWALL, B.F.V. LONG		10	10′-6	158	7	10′-6	110	---	---	---	---	---	---	6c13
6c13	WINGWALL, B.F.V. SHORT		9	10′-6	142	6	10′-6	95	---	---	---	---	---	---	6c13
5c14	WINGWALL, B.F.V. LONG		2	12′-8	26	1	11′-8	12	2	10′-8	22	2	9′-8	20	5c14
5c14	WINGWALL, B.F.V. SHORT		2	12′-8	26	2	11′-8	24	2	10′-8	22	2	9′-8	20	5c14
4d1	APRON, LONGIT., BOTT.		21	18′-1	254	21	16′-0	224	21	13′-11	195	21	11′-11	167	4d1
4d2	APRON, LONGIT., BOTT. LONG		3	22′-7	45	3	19′-3	39	3	15′-11	32	3	12′-7	25	4d2
4d3	APRON, LONGIT., BOTT. SHORT		3	20′-2	40	3	17′-3	35	3	14′-4	29	3	11′-5	23	4d3
6f1	APRON, LONGIT., TOP		31	18′-1	842	31	16′-0	745	31	13′-11	648	31	11′-11	555	6f1
6f2	APRON, LONGIT., TOP LONG		4 VAR.	7′-7 TO 15′-3	69	4 VAR.	5′-6 TO 13′-2	56	3 VAR.	5′-11 TO 11′-1	38	2 VAR.	6′-5 TO 9′-0	23	6f2
6f3	APRON, LONGIT., TOP SHORT		4 VAR.	6′-7 TO 15′-4	66	4 VAR.	4′-5 TO 13′-3	53	3 VAR.	5′-3 TO 11′-2	37	2 VAR.	6′-2 TO 9′-1	23	6f3
6f4	APRON, LONGIT., TOP LONG		1	27′-11	42	1	24′-6	37	1	21′-1	32	1	17′-8	27	6f4
6f5	APRON, LONGIT., TOP SHORT		1	24′-9	37	1	21′-9	33	1	18′-9	28	1	15′-9	24	6f5
4i1	PARAPET, VERTICAL		63	6′-2	260	63	6′-2	260	63	6′-2	260	63	6′-2	260	4i1
7ji	PARAPET, HORIZONTAL		4	33′-9	276	4	33′-9	276	4	33′-9	276	4	33′-9	276	7ji
6m1	APRON, TRANS., TOP		7 VAR.	34′-0 TO 35′-2	364	7 VAR.	34′-0 TO 35′-2	364	7 VAR.	34′-0 TO 35′-2	364	7 VAR.	34′-0 TO 35′-2	364	6m1
6m2	APRON, TRANS., TOP		9 VAR.	35′-5 TO 38′-5	499	6 VAR.	35′-5 TO 37′-4	328	3 VAR.	35′-5 TO 36′-2	161	1 VAR.	35′-5 TO 35′-5	53	6m2
6m3	APRON, TRANS., TOP		11 VAR.	6′-1 TO 32′-2	316	11 VAR.	6′-2 TO 32′-4	318	12 VAR.	3′-8 TO 32′-5	325	11 VAR.	3′-9 TO 29′-11	278	6m3
6m4	APRON, TRANS., BOTT.		14 VAR.	28′-2 TO 35′-2	666	12 VAR.	28′-2 TO 34′-1	561	10 VAR.	28′-2 TO 33′-1	460	8 VAR.	28′-2 TO 31′-11	361	6m4
6p1	CURTAIN, HORIZONTAL		4	32′-10	197	4	32′-10	197	4	32′-10	197	4	32′-10	197	6p1
6p2	CURTAIN, HORIZONTAL LONG		4	14′-2	85	4	12′-8	76	4	11′-2	67	4	9′-8	58	6p1
6p3	CURTAIN, HORIZONTAL SHORT		4	11′-3	68	4	10′-2	61	4	9′-1	55	4	7′-11	48	6p2
6s1	WING SLOPE, BOTH F. LONG		2	6′-11	21	2	6′-11	21	2	6′-11	21	2	6′-11	21	6s1
6s2	WING SLOPE, BOTH F. SHORT		2	6′-6	20	2	6′-6	20	2	6′-6	20	2	6′-6	20	6s2
6s3	WING SLOPE, BOTH F. LONG		2	23′-10	72	2	20′-3	61	2	16′-9	50	2	13′-2	40	6s3
6s4	WING SLOPE, BOTH F. SHORT		2	21′-6	65	2	18′-4	55	2	15′-2	46	2	12′-0	36	6s4
6s5	WING SLOPE, F.F. LONG		1	28′-1	42	1	24′-6	37	1	20′-11	31	1	17′-4	26	6s5
6s6	WING SLOPE, F.F. SHORT		1	25′-4	38	1	22′-2	33	1	19′-0	29	1	15′-10	24	6s6
6s7	INTERIOR WALLS, BOTH F.H.		4	18′-11	114	4	16′-8	100	4	14′-4	86	4	12′-1	73	6s7
5t1	CURTAIN, VERTICAL		36	6′-8	250	34	6′-5	228	32	6′-5	214	30	6′-5	201	5t1

ESTIMATED QUANTITIES ONE HEADWALL			10′ x 7′		10′ x 6′		10′ x 5′		10′ x 4′	
REINF. STEEL			6649 LB		5671 LB		4651 LB		3886 LB	
CONCRETE	PARAPET Δ	3.2	48.9 CY	3.2	41.3 CY	3.2	34.8 CY	3.2	28.7 CY	
	WINGWALLS	10.3		7.9		5.8		3.9		
	FOOTING *	35.4		30.2		25.8		21.6		

BENT BAR DETAILS

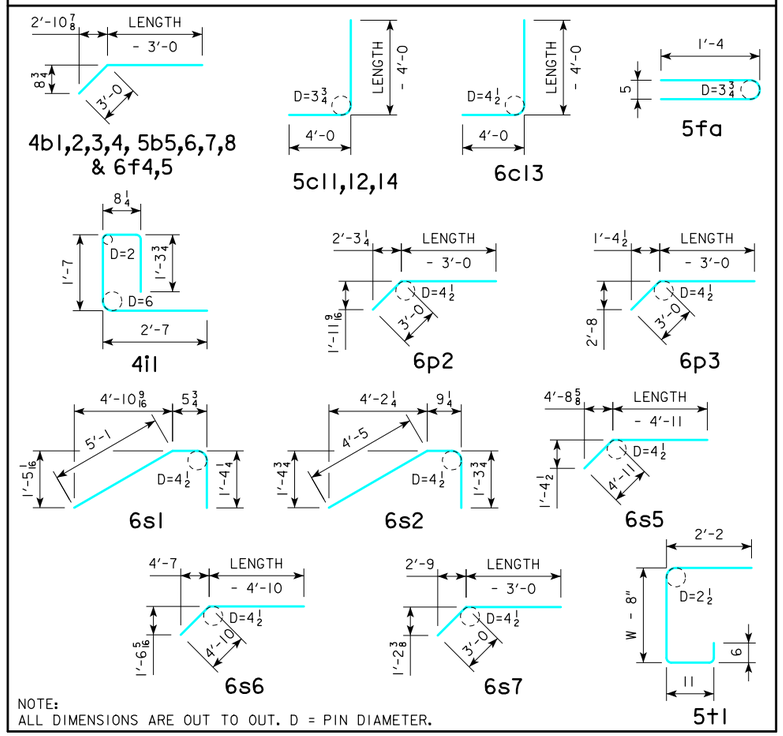

Δ INCLUDES TOP OF WINGWALL QUANTITIES.
* ASSUMES APRON AND FLOOR ARE EQUAL THICKNESS, ADJUST CONCRETE QUANTITIES FOR TRANSITION WHERE APRON AND FLOOR THICKNESS ARE NOT EQUAL.

NOTE:
WEIGHT OF BARS OVER 40′-0 LONG INCLUDES AN ALLOWANCE OF 2′-3 FOR LAP.
LENGTHS SHOWN FOR BARS OVER 40′-0 LONG DO NOT INCLUDE LAP.

"SHORT" DENOTES SHORT WINGWALL
"LONG" DENOTES LONG WINGWALL

HEADWALL NOTES:

1. SEE DRAWING TRRCB G1-12 FOR GENERAL INFORMATION, SPECIFICATIONS, AND DESIGN STRESSES.
2. THIS HEADWALL IS BASED ON A 3:1 SLOPE NORMAL TO CENTERLINE OF ROADWAY.
3. THE SIDES OF THE FOOTING ARE TO BE FORMED TO INSURE CORRECT LINE AND GRADE.
4. ALL SLAB AND FLOOR REINFORCING STEEL IS TO BE SUPPORTED BY BAR CHAIRS AT INTERVALS OF NOT MORE THAN 3′-0 IN EITHER DIRECTION AS OUTLINED IN THE STANDARD SPECIFICATIONS.
5. CLEAR DISTANCE FROM FACE OF CONCRETE TO NEAR REINFORCING BAR IS TO BE 2″ UNLESS OTHERWISE NOTED OR SHOWN. CLEARANCE TO THE BOTTOM ENDS OF VERTICAL BARS SHALL BE 3 INCHES.
6. CONCRETE QUANTITIES ARE ESTIMATED FROM BACK OF PARAPET.
7. HORIZONTAL TAILS OF BARS "b" & "s" ESTIMATED TO EXTEND 2′-0 BEYOND BACK OF PARAPET (INTO END OF BARREL). LONGITUDINAL BARS "d", "6f1", AND "6f3" ESTIMATED TO PROJECT INTO END SECTION OF BARREL A MINIMUM OF 2′-0 BEYOND BACK OF PARAPET.
8. THE "LENGTH" COLUMN REFLECTS TOTAL NUMBER OF FEET NECESSARY TO MEET THESE REQUIREMENTS.

LATEST REVISION DATE

APPROVED BY BRIDGE ENGINEER

IOWA DOT Highway Division

STANDARD DESIGN

TRIPLE REINFORCED CONCRETE BOX CULVERTS

APRIL, 2012

FLARED WING HEADWALLS

15° SKEW

TRH 15-9-12

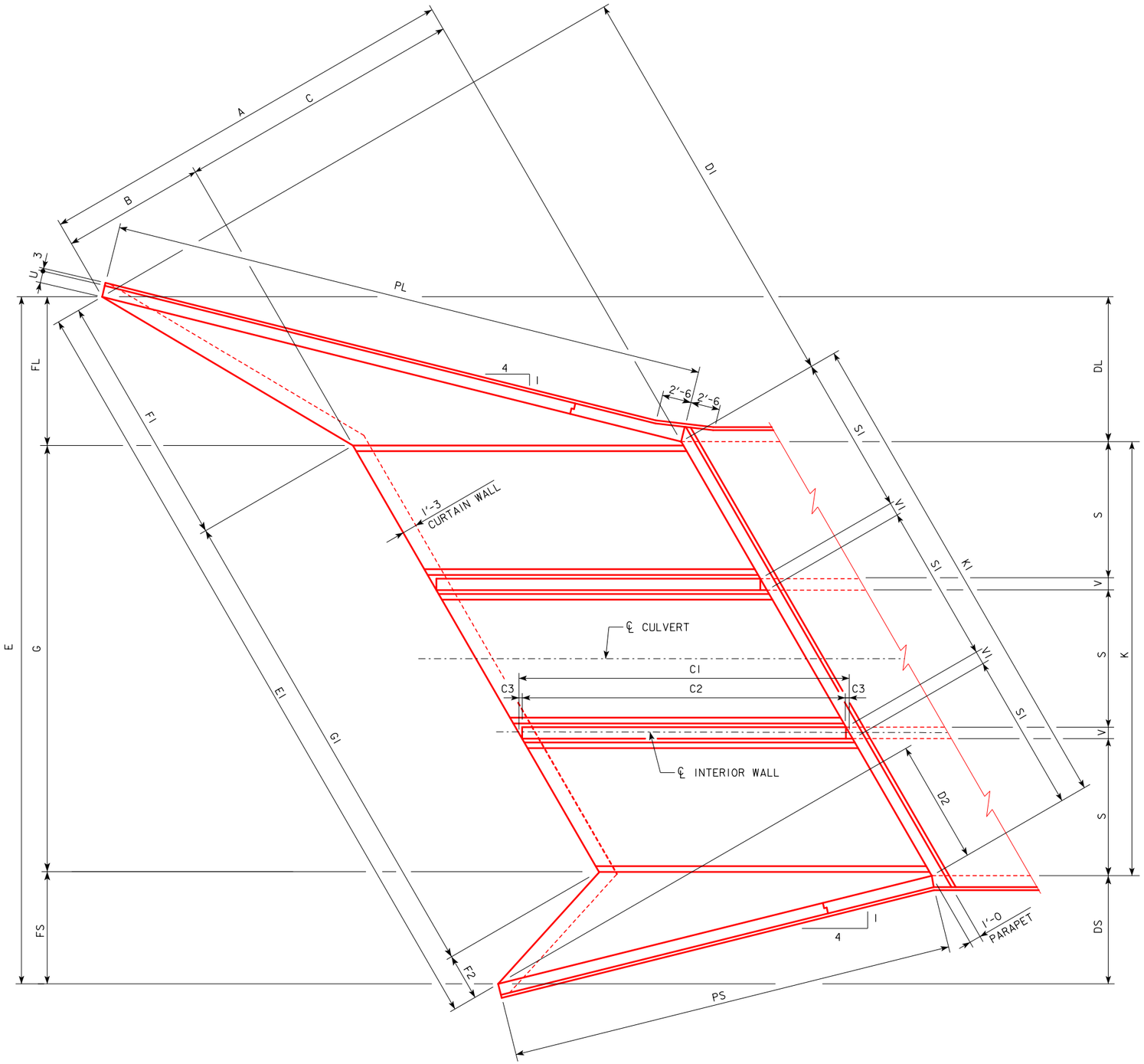

PLAN VIEW

NOTES:

1. SEE SHEET TRRCB G1-12 FOR GENERAL INFORMATION, SPECIFICATIONS AND DESIGN STRESSES.
2. SEE SHEET TRH 30-2-12 FOR DIMENSION TABLE.
3. SEE SHEET TRH 30-7-12 FOR HEADWALL NOTES.

LATEST REVISION DATE

APPROVED BY BRIDGE ENGINEER

IOWA DOT Highway Division

STANDARD DESIGN

TRIPLE REINFORCED CONCRETE BOX CULVERTS

APRIL, 2012

FLARED WING HEADWALLS

30° SKEW

TRH 30-1-12

ENGLISHLRFDSIGNEDTRIPLECULVERTS.DGN - TRH 30-1-12 - THIS SHEET ISSUED 04-12.

DIMENSION TABLE

S X H	12' X 12'	12' X 11'	12' X 10'	12' X 9'	12' X 8'	12' X 7'	12' X 6'	12' X 5'	12' X 4'	10' X 12'	10' X 11'	10' X 10'	10' X 9'	10' X 8'	10' X 7'	10' X 6'	10' X 5'	10' X 4'	S X H
A	37'-0	34'-0	31'-0	28'-0	25'-0	22'-0	19'-0	16'-0	13'-0	37'-0	34'-0	31'-0	28'-0	25'-0	22'-0	19'-0	16'-0	13'-0	A
B	12'-4	11'-4	10'-4	9'-4	8'-4	7'-4	6'-4	5'-4	4'-4	12'-4	11'-4	10'-4	9'-4	8'-4	7'-4	6'-4	5'-4	4'-4	B
C	24'-8	22'-8	20'-8	18'-8	16'-8	14'-8	12'-8	10'-8	8'-8	24'-8	22'-8	20'-8	18'-8	16'-8	14'-8	12'-8	10'-8	8'-8	C
C1	28'-5 3/4	26'-2 1/8	23'-10 3/8	21'-6 5/8	19'-3	16'-11 1/4	14'-7 1/2	12'-3 3/4	10'-0 1/8	28'-5 3/4	26'-2 1/8	23'-10 3/8	21'-6 5/8	19'-3	16'-11 1/4	14'-7 1/2	12'-3 3/4	10'-0 1/8	C1
C2	27'-10 7/8	25'-7 3/4	23'-4 5/8	21'-0 7/8	18'-9 1/8	16'-6	14'-2 3/8	11'-10 5/8	9'-6 7/8	27'-10 7/8	25'-7 3/4	23'-4 5/8	21'-0 7/8	18'-9 1/8	16'-6	14'-2 3/8	11'-10 5/8	9'-6 7/8	C2
C3	0'-3 1/2	0'-3 1/8	0'-2 7/8	0'-2 7/8	0'-2 7/8	0'-2 5/8	0'-2 5/8	0'-2 5/8	0'-2 5/8	0'-3 1/2	0'-3 1/8	0'-2 7/8	0'-2 7/8	0'-2 7/8	0'-2 5/8	0'-2 5/8	0'-2 5/8	0'-2 5/8	C3
DL	12'-5 3/4	11'-5 5/8	10'-5 1/2	9'-5 3/8	8'-5 1/4	7'-5 1/8	6'-4 7/8	5'-4 3/4	4'-4 5/8	12'-5 3/4	11'-5 5/8	10'-5 1/2	9'-5 3/8	8'-5 1/4	7'-5 1/8	6'-4 7/8	5'-4 3/4	4'-4 5/8	DL
DS	9'-4	8'-6 7/8	7'-9 7/8	7'-0 3/4	6'-3 5/8	5'-6 5/8	4'-9 1/2	4'-0 3/8	3'-3 3/8	9'-4	8'-6 7/8	7'-9 7/8	7'-0 3/4	6'-3 5/8	5'-6 5/8	4'-9 1/2	4'-0 3/8	3'-3 3/8	DS
D1	35'-9 1/4	32'-10 1/2	29'-11 3/4	27'-0 7/8	24'-2 1/8	21'-3 1/4	18'-4 1/2	15'-5 5/8	12'-6 7/8	35'-9 1/4	32'-10 1/2	29'-11 3/4	27'-0 7/8	24'-2 1/8	21'-3 1/4	18'-4 1/2	15'-5 5/8	12'-6 7/8	D1
D2	10'-7	9'-8 3/4	8'-10 3/8	8'-0 1/8	7'-1 7/8	6'-3 1/2	5'-5 1/4	4'-6 7/8	3'-8 5/8	10'-7	9'-8 3/4	8'-10 3/8	8'-0 1/8	7'-1 7/8	6'-3 1/2	5'-5 1/4	4'-6 7/8	3'-8 5/8	D2
E	59'-9 3/4	57'-10 5/8	55'-11 3/8	54'-2 1/8	52'-4 7/8	50'-5 5/8	48'-8 3/8	46'-11 1/4	45'-2	53'-9 3/4	51'-10 5/8	49'-11 3/8	48'-2 1/8	46'-4 7/8	44'-5 5/8	42'-8 3/8	40'-11 1/4	39'-2	E
E1	69'-0 7/8	66'-10	64'-7 1/4	62'-6 3/4	60'-6 1/8	58'-3 3/8	56'-2 7/8	54'-2 3/8	52'-1 7/8	62'-1 3/4	59'-10 7/8	57'-8 1/8	55'-7 1/2	53'-7	51'-4 1/4	49'-3 3/4	47'-3 1/4	45'-2 3/4	E1
FL	12'-9 3/4	11'-9 5/8	10'-9 1/2	9'-9 3/8	8'-9 1/4	7'-9 1/8	6'-8 7/8	5'-8 3/4	4'-8 5/8	12'-9 3/4	11'-9 5/8	10'-9 1/2	9'-9 3/8	8'-9 1/4	7'-9 1/8	6'-8 7/8	5'-8 3/4	4'-8 5/8	FL
FS	9'-8	8'-10 7/8	8'-1 7/8	7'-4 3/4	6'-7 5/8	5'-10 5/8	5'-1 1/2	4'-4 3/8	3'-7 3/8	9'-8	8'-10 7/8	8'-1 7/8	7'-4 3/4	6'-7 5/8	5'-10 5/8	5'-1 1/2	4'-4 3/8	3'-7 3/8	FS
F1	21'-11	20'-2 1/8	18'-5 1/8	16'-8 1/8	14'-11 1/4	13'-2 1/4	11'-5 3/8	9'-8 3/8	7'-11 3/8	21'-11	20'-2 1/8	18'-5 1/8	16'-8 1/8	14'-11 1/4	13'-2 1/4	11'-5 3/8	9'-8 3/8	7'-11 3/8	F1
F2	4'-0 1/2	3'-9	3'-5 3/8	3'-1 7/8	2'-10 1/4	2'-6 3/4	2'-3 1/8	1'-11 5/8	1'-8	4'-0 1/2	3'-9	3'-5 3/8	3'-1 7/8	2'-10 1/4	2'-6 3/4	2'-3 1/8	1'-11 5/8	1'-8	F2
G	37'-4	37'-2	37'-0	37'-0	37'-0	36'-10	36'-10	36'-10	36'-10	31'-4	31'-2	31'-0	31'-0	31'-0	30'-10	30'-10	30'-10	30'-10	G
G1	43'-1 1/4	42'-11	42'-8 5/8	42'-8 5/8	42'-8 5/8	42'-6 3/8	42'-6 3/8	42'-6 3/8	42'-6 3/8	36'-2 1/8	35'-11 7/8	35'-9 1/2	35'-9 1/2	35'-9 1/2	35'-7 1/4	35'-7 1/4	35'-7 1/4	35'-7 1/4	G1
G2	44'-4 1/8	44'-1 3/4	43'-11 3/8	43'-11 3/8	43'-11 1/4	43'-8 7/8	43'-8 7/8	43'-8 5/8	43'-8 1/2	37'-5	37'-2 5/8	37'-0 1/4	37'-0 1/4	37'-0 1/8	36'-9 3/4	36'-9 5/8	36'-9 1/2	36'-9 3/8	G2
G3	25'-1 3/4	23'-1 5/8	21'-1 1/2	19'-1 3/8	17'-1 1/4	15'-1 1/8	13'-1	11'-0 3/4	9'-0 5/8	25'-1 3/4	23'-1 5/8	21'-1 1/2	19'-1 3/8	17'-1 1/4	15'-1 1/8	13'-1	11'-0 3/4	9'-0 5/8	G3
G4	25'-7 7/8	23'-4 1/4	21'-0 5/8	19'-0 1/2	17'-0 3/8	14'-8 7/8	12'-8 3/4	10'-8 3/4	8'-8 3/4	25'-7 7/8	23'-4 1/4	21'-0 5/8	19'-0 1/2	17'-0 3/8	14'-8 7/8	12'-8 3/4	10'-8 3/4	8'-8 3/4	G4
G5	12'-11 3/4	11'-11 1/4	10'-10 3/4	9'-10 1/4	8'-9 3/4	7'-9 1/4	6'-8 3/4	5'-8 1/4	4'-7 3/4	12'-11 3/4	11'-11 1/4	10'-10 3/4	9'-10 1/4	8'-9 3/4	7'-9 1/4	6'-8 3/4	5'-8 1/4	4'-7 3/4	G5
G6	14'-3 1/4	13'-0 7/8	11'-10 5/8	10'-10 1/8	9'-9 5/8	8'-7 3/8	7'-7	6'-6 1/2	5'-6 1/8	14'-3 1/4	13'-0 7/8	11'-10 5/8	10'-10 1/8	9'-9 5/8	8'-7 3/8	7'-7	6'-6 1/2	5'-6 1/8	G6
G7	0'-2 1/4	0'-5 1/2	0'-8 7/8	0'-8 7/8	0'-8 7/8	1'-0 1/8	1'-0	1'-0	0'-11 7/8	0'-2 1/4	0'-5 1/2	0'-8 7/8	0'-8 7/8	0'-8 7/8	1'-0 1/8	1'-0	1'-0	0'-11 7/8	G7
G8	0'-4 5/8	0'-6 1/8	0'-7 5/8	0'-7 5/8	0'-7 5/8	0'-9	0'-9	0'-9	0'-9	0'-4 5/8	0'-6 1/8	0'-7 5/8	0'-7 5/8	0'-7 5/8	0'-9	0'-9	0'-9	0'-9	G8
K	38'-0	37'-10	37'-8	37'-8	37'-8	37'-6	37'-6	37'-6	37'-6	32'-0	31'-10	31'-8	31'-8	31'-8	31'-6	31'-6	31'-6	31'-6	K
K1	43'-10 1/2	43'-8 1/4	43'-5 7/8	43'-5 7/8	43'-5 7/8	43'-3 5/8	43'-3 5/8	43'-3 5/8	43'-3 5/8	36'-11 3/8	36'-9 1/8	36'-6 3/4	36'-6 3/4	36'-6 3/4	36'-4 1/2	36'-4 1/2	36'-4 1/2	36'-4 1/2	K1
PL	51'-5 5/8	47'-3 1/2	43'-1 1/2	38'-11 3/8	34'-9 1/4	30'-7 1/4	26'-5 1/8	22'-3 1/8	18'-1	51'-5 5/8	47'-3 1/2	43'-1 1/2	38'-11 3/8	34'-9 1/4	30'-7 1/4	26'-5 1/8	22'-3 1/8	18'-1	PL
PS	38'-5 3/4	35'-4 3/8	32'-2 7/8	29'-1 1/2	26'-0	22'-10 5/8	19'-9 1/8	16'-7 3/4	13'-6 1/4	38'-5 3/4	35'-4 3/8	32'-2 7/8	29'-1 1/2	26'-0	22'-10 5/8	19'-9 1/8	16'-7 3/4	13'-6 1/4	PS
RL	52'-11 1/8	48'-7 5/8	44'-4 1/8	40'-0 5/8	35'-9 1/8	31'-5 5/8	27'-2 1/8	22'-10 5/8	18'-7 1/8	52'-11 1/8	48'-7 5/8	44'-4 1/8	40'-0 5/8	35'-9 1/8	31'-5 5/8	27'-2 1/8	22'-10 5/8	18'-7 1/8	RL
RS	40'-5	37'-1 5/8	33'-10 1/4	30'-7	27'-3 5/8	24'-0 3/8	20'-9	17'-5 3/4	14'-2 3/8	40'-5	37'-1 5/8	33'-10 1/4	30'-7	27'-3 5/8	24'-0 3/8	20'-9	17'-5 3/4	14'-2 3/8	RS
R1	30'-0	27'-6 1/4	25'-0 5/8	22'-6 1/2	20'-0 3/8	17'-6 3/4	15'-0 5/8	12'-6 1/2	10'-0 3/8	30'-0	27'-6 1/4	25'-0 5/8	22'-6 1/2	20'-0 3/8	17'-6 3/4	15'-0 5/8	12'-6 1/2	10'-0 3/8	R1
S1	13'-10 1/4	13'-10 1/4	13'-10 1/4	13'-10 1/4	13'-10 1/4	13'-10 1/4	13'-10 1/4	13'-10 1/4	13'-10 1/4	11'-6 5/8	11'-6 5/8	11'-6 5/8	11'-6 5/8	11'-6 5/8	11'-6 5/8	11'-6 5/8	11'-6 5/8	11'-6 5/8	S1
T	1'-2	1'-2	1'-2	1'-2	1'-2	1'-2	1'-2	1'-2	1'-2	1'-1	1'-1	1'-1	1'-1	1'-1	1'-1	1'-1	1'-1	1'-1	T
U	1'-0	0'-11	0'-10	0'-10	0'-10	0'-9	0'-9	0'-9	0'-9	1'-0	0'-11	0'-10	0'-10	0'-10	0'-9	0'-9	0'-9	0'-9	U
V	1'-0	0'-11	0'-10	0'-10	0'-10	0'-9	0'-9	0'-9	0'-9	1'-0	0'-11	0'-10	0'-10	0'-10	0'-9	0'-9	0'-9	0'-9	V
V1	1'-1 7/8	1'-0 3/4	0'-11 1/2	0'-11 1/2	0'-11 1/2	0'-10 3/8	0'-10 3/8	0'-10 3/8	0'-10 3/8	1'-1 7/8	1'-0 3/4	0'-11 1/2	0'-11 1/2	0'-11 1/2	0'-10 3/8	0'-10 3/8	0'-10 3/8	0'-10 3/8	V1
W	5'-0	4'-9	4'-6	4'-3	4'-0	3'-9	3'-6	3'-6	3'-6	5'-0	4'-9	4'-6	4'-3	4'-0	3'-9	3'-6	3'-6	3'-6	W

NOTES:

1. SEE SHEET TRRCB G1-12 FOR GENERAL INFORMATION, SPECIFICATIONS, AND DESIGN STRESSES.
2. SEE SHEETS TRH 30-1-12 AND TRH 30-3-12 THRU TRH 30-6-12 FOR LOCATION OF CERTAIN DIMENSIONS TABULATED.
3. SEE SHEET TRH 30-7-12 FOR HEADWALL NOTES.

LATEST REVISION DATE

APPROVED BY BRIDGE ENGINEER

IOWA DOT Highway Division

STANDARD DESIGN

TRIPLE REINFORCED CONCRETE BOX CULVERTS

APRIL, 2012

FLARED WING HEADWALLS

30° SKEW

TRH 30-2-12

ENGLISHLRFDSIGNEDTRIPLECULVERTS.DGN - TRH 30-2-12 - THIS SHEET ISSUED 04-12.

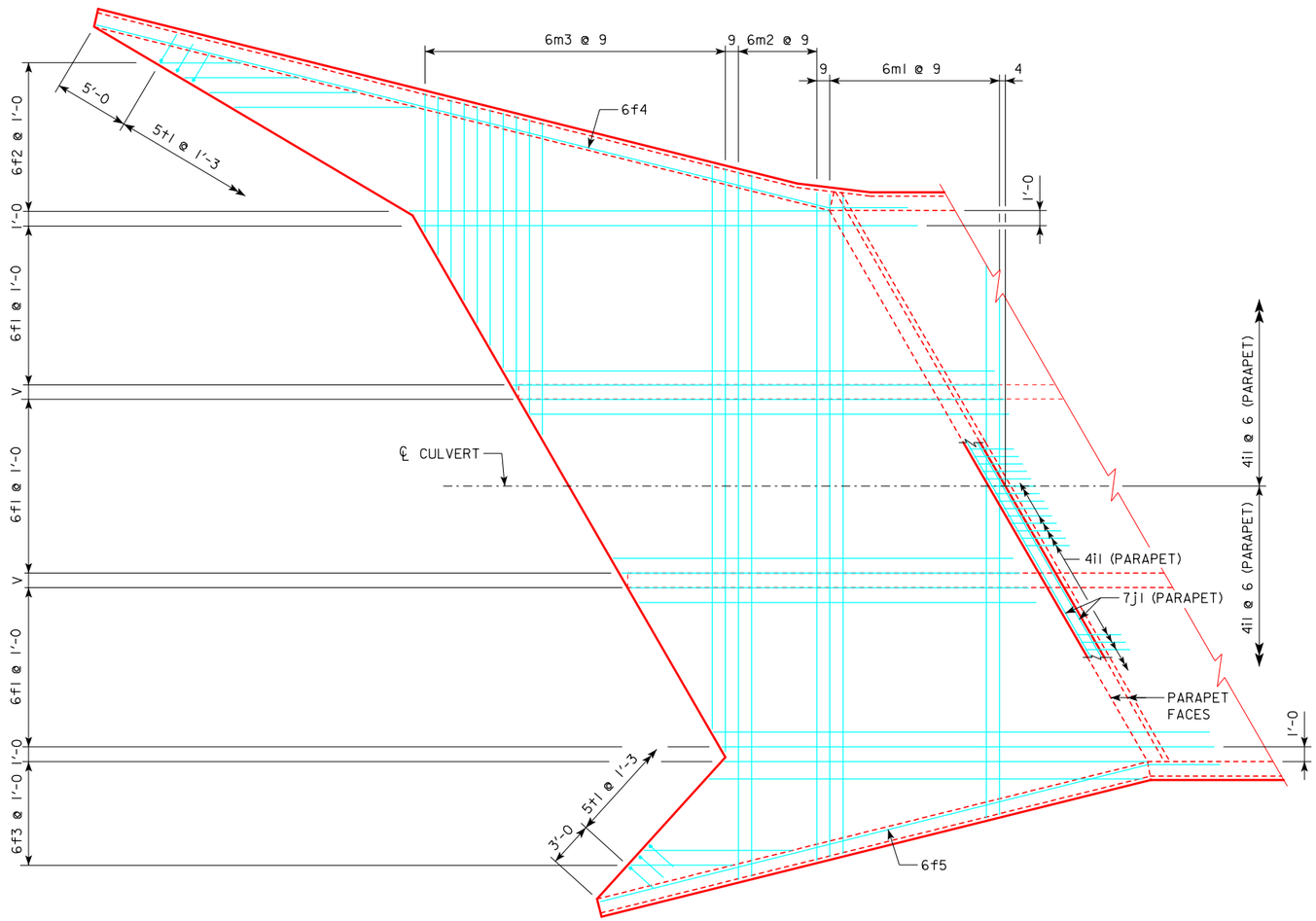

PLAN VIEW - TOP OF APRON REINFORCING BARS

NOTES:

1. BAR SPACINGS AND POSITIONS SHOWN ARE SIMILAR FOR ALL SIZES OF HEADWALLS IN THIS STANDARD.
2. TOP TRANSVERSE FLOOR BARS ARE REFERENCED APPROXIMATELY 4" FROM THE BACK OF THE PARAPET FOR ALL HEADWALLS.
3. FOR DIMENSION TABLE SEE SHEET TRH 30-2-12.
4. FOR REINFORCING IN CURTAIN WALL SEE CURTAIN WALL DETAILS ON SHEET TRH 30-5-12.

LATEST REVISION DATE

APPROVED BY BRIDGE ENGINEER

IOWA DOT Highway Division

STANDARD DESIGN

TRIPLE REINFORCED CONCRETE BOX CULVERTS

APRIL, 2012

FLARED WING HEADWALLS

30° SKEW

TRH 30-3-12

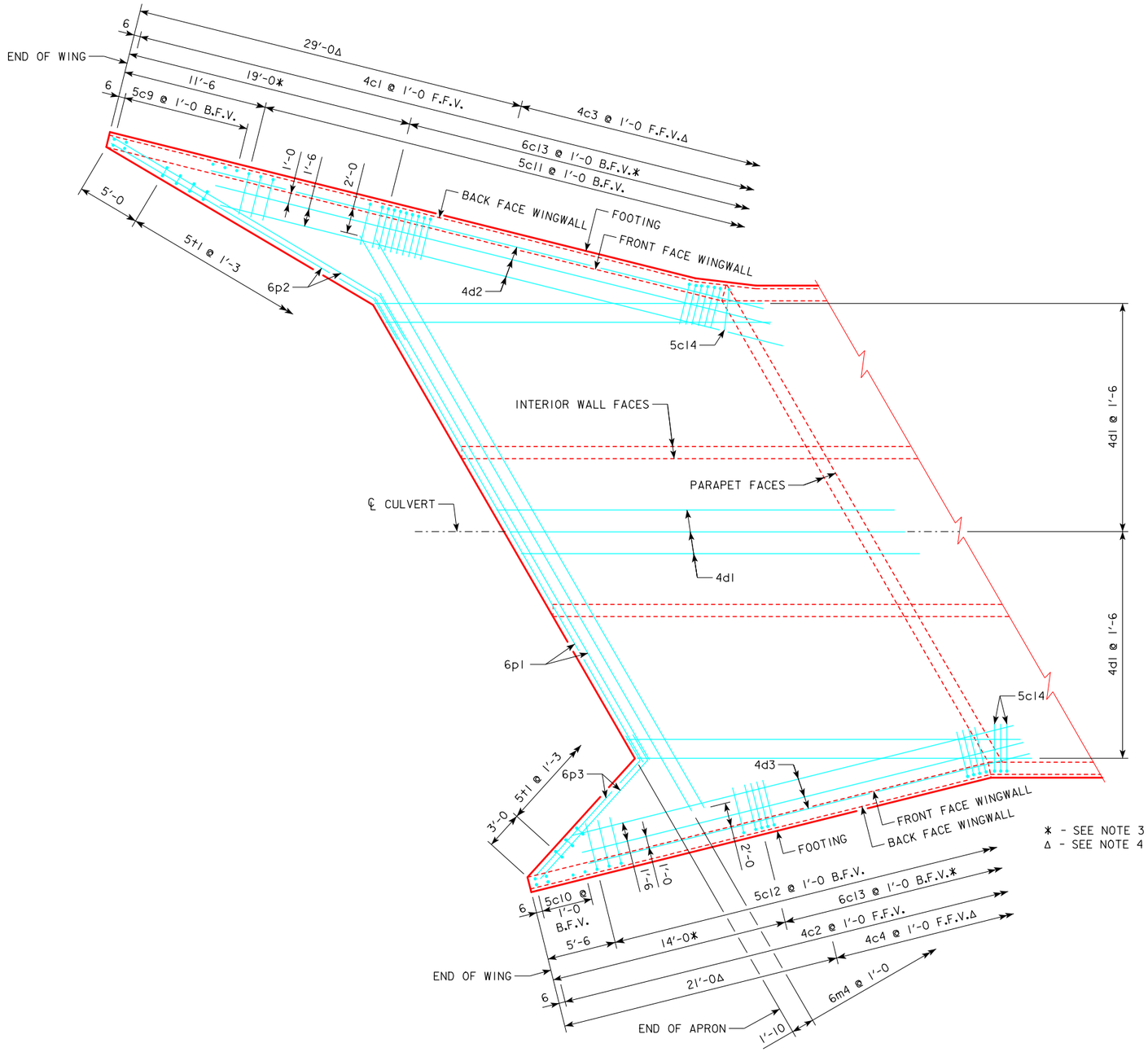

PLAN VIEW - BOTTOM OF APRON REINFORCING BARS

NOTES:

1. BAR SPACINGS AND POSITIONS SHOWN ARE SIMILAR FOR ALL SIZES OF HEADWALLS IN THIS STANDARD.
2. WINGWALL BARS CONSISTENTLY REFERENCED FROM END OF WING FOR ALL HEADWALLS.
3. THERE ARE NO 6c13 BARS IN THE 4' & 5' HEIGHT HEADWALLS.
4. 4c3 & 4c4 BARS USED ONLY IN THE 9', 10', 11' & 12' HEIGHT HEADWALLS.
5. FOR DIMENSION TABLE SEE SHEET TRH 30-2-12.
6. FOR REINFORCING IN CURTAIN WALL SEE CURTAIN WALL DETAILS ON SHEET TRH 30-5-12.

LATEST REVISION DATE

APPROVED BY BRIDGE ENGINEER

IOWA DOT Highway Division

STANDARD DESIGN

TRIPLE REINFORCED CONCRETE BOX CULVERTS

APRIL, 2012

FLARED WING HEADWALLS

30° SKEW

TRH 30-4-12

ENGLISHLRFDSIGNEDTRIPLECULVERTS.DGN - TRH 30-4-12 - THIS SHEET ISSUED 04-12.

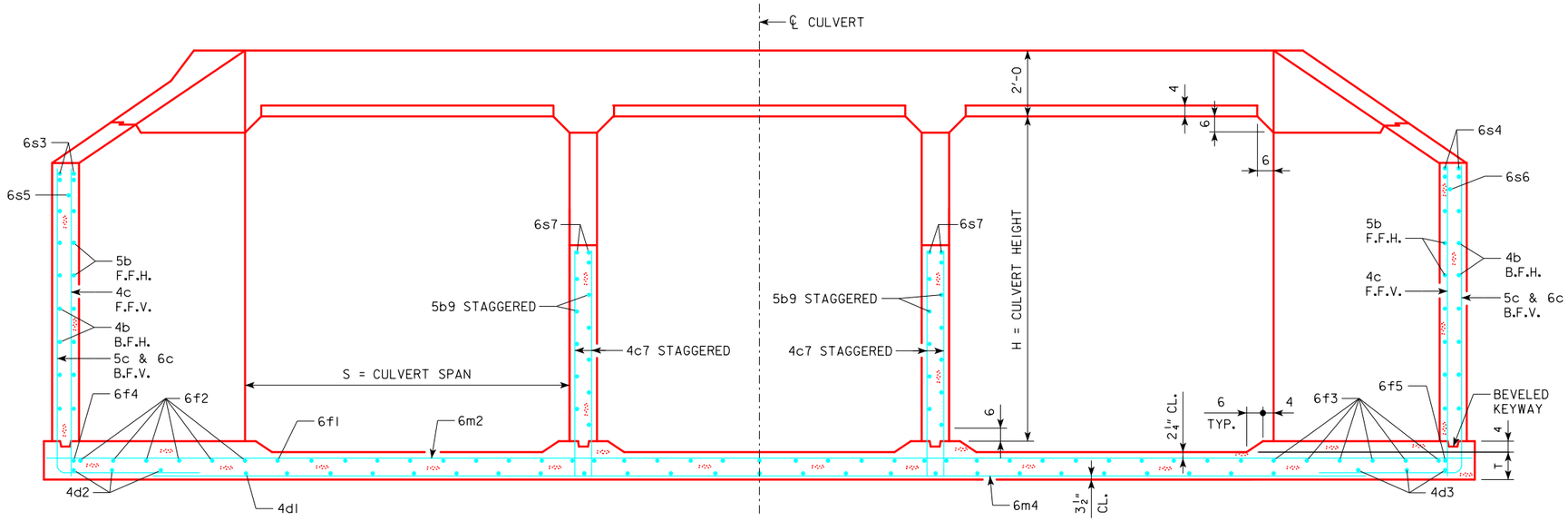

TYPICAL SECTION - NEAR CENTER OF APRON

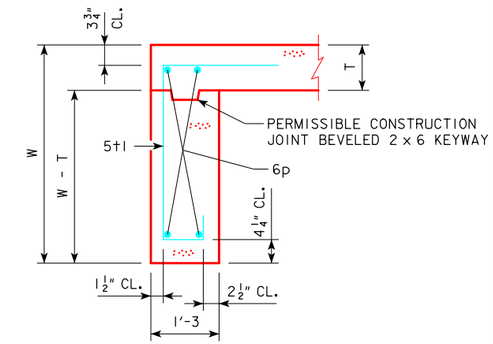

SECTION THRU CURTAIN WALL

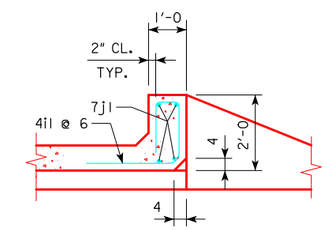

SECTION THRU PARAPET

CULVERT HEIGHT (H)	ANGLE	
	∡L	∡S
4'	31°24'	51°02'
5'	31°11'	50°16'
6'	31°03'	49°39'
7'	30°55'	49°16'
8'	30°51'	48°54'
9'	30°46'	48°41'
10'	30°43'	48°27'
11'	30°41'	48°19'
12'	30°38'	48°09'

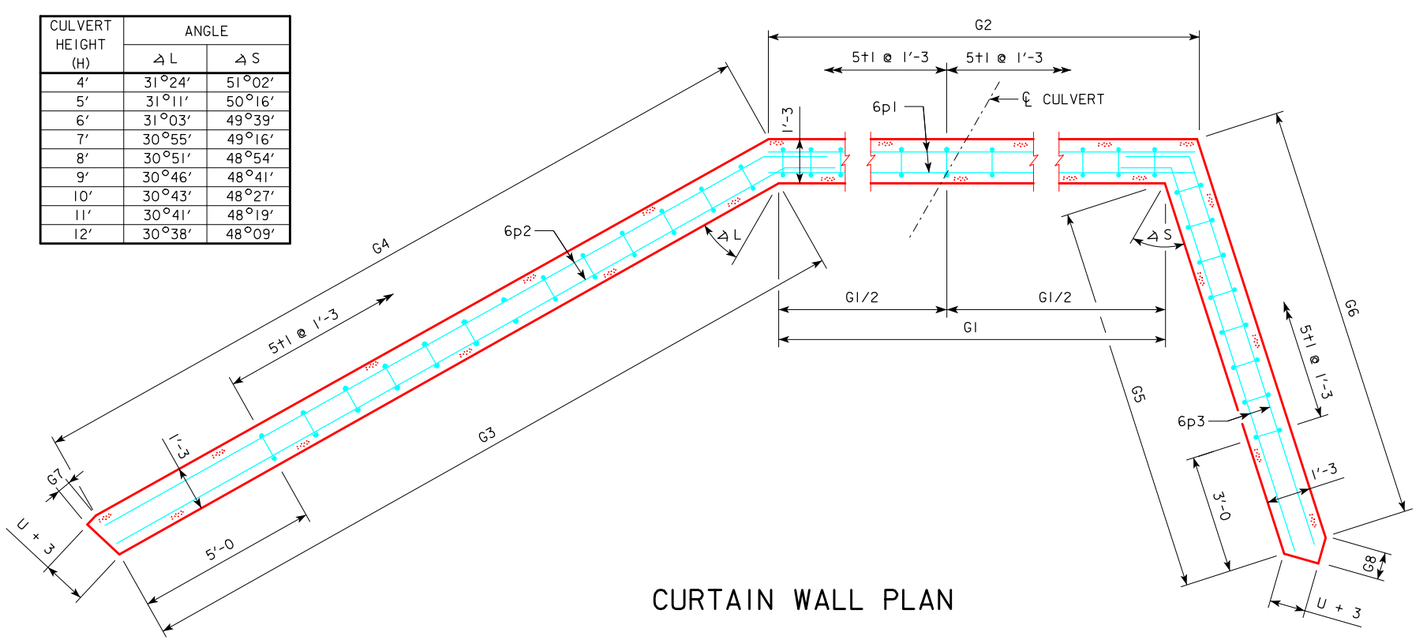

CURTAIN WALL PLAN

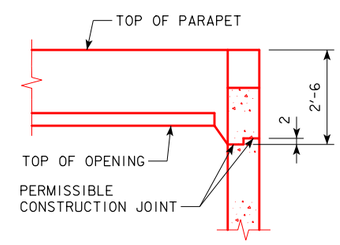

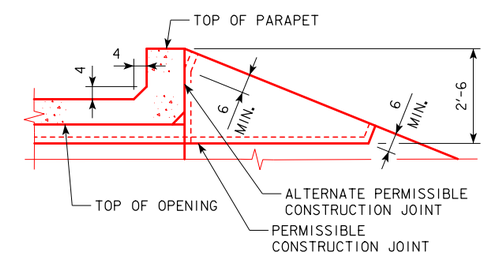

TOP OF WINGWALL DETAILS

NOTES:

1. SEE SHEET TRRCB G1-12 FOR GENERAL INFORMATION, SPECIFICATIONS, AND DESIGN STRESSES.
2. FOR DIMENSION TABLE SEE SHEET TRH 30-2-12.

LATEST REVISION DATE

APPROVED BY BRIDGE ENGINEER

IOWA DOT Highway Division

STANDARD DESIGN

TRIPLE REINFORCED CONCRETE BOX CULVERTS

APRIL, 2012

FLARED WING HEADWALLS

30° SKEW

TRH 30-5-12

ENGLISHLRFDSIGNEDTRIPLECULVERTS.DGN - TRH 30-5-12 - THIS SHEET ISSUED 04-12.

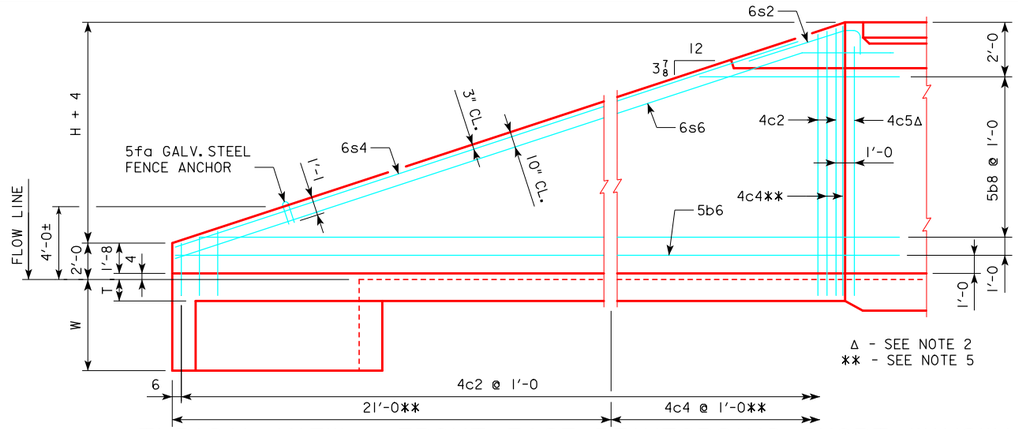

TYPICAL VIEW - FRONT FACE REINFORCING SHORT WINGWALL

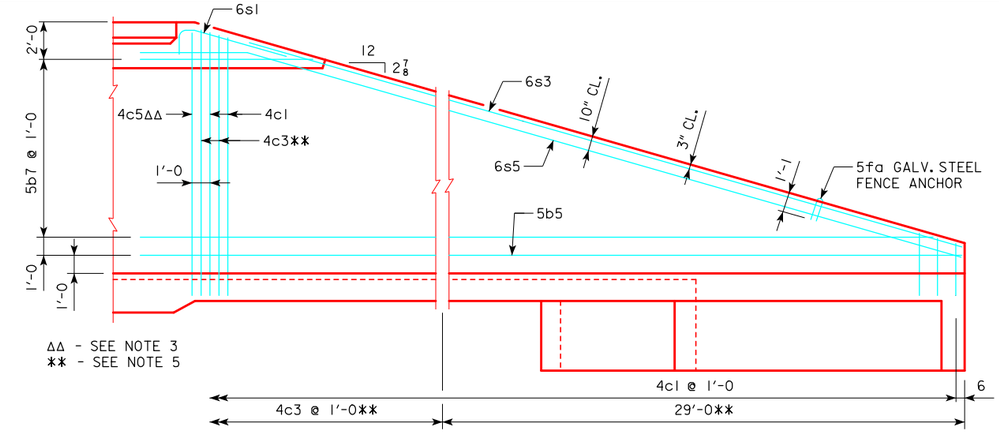

TYPICAL VIEW - FRONT FACE REINFORCING LONG WINGWALL

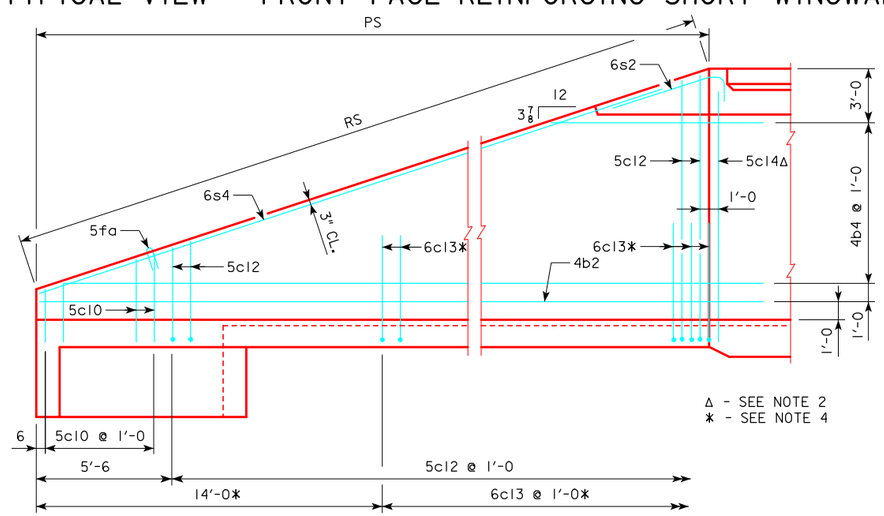

TYPICAL VIEW - BACK FACE REINFORCING SHORT WINGWALL

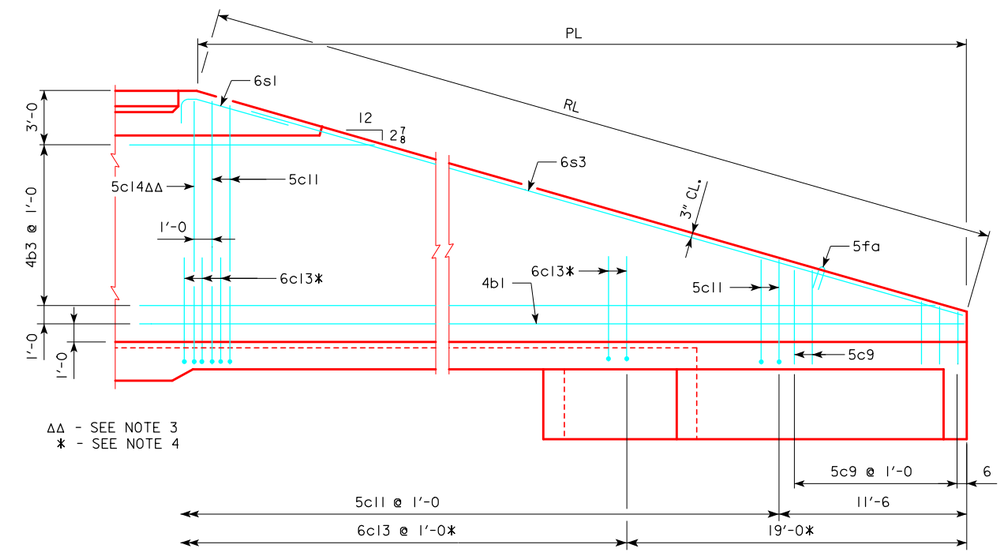

TYPICAL VIEW - BACK FACE REINFORCING LONG WINGWALL

CULVERT HEIGHT (H)	SLOPE y INCHES
4'	3 3/4
5'	4 1/16
6'	4 1/4
7'	4 3/8
8'	4 1/2
9'	4 9/16
10'	4 5/8
11'	4 11/16
12'	4 3/4

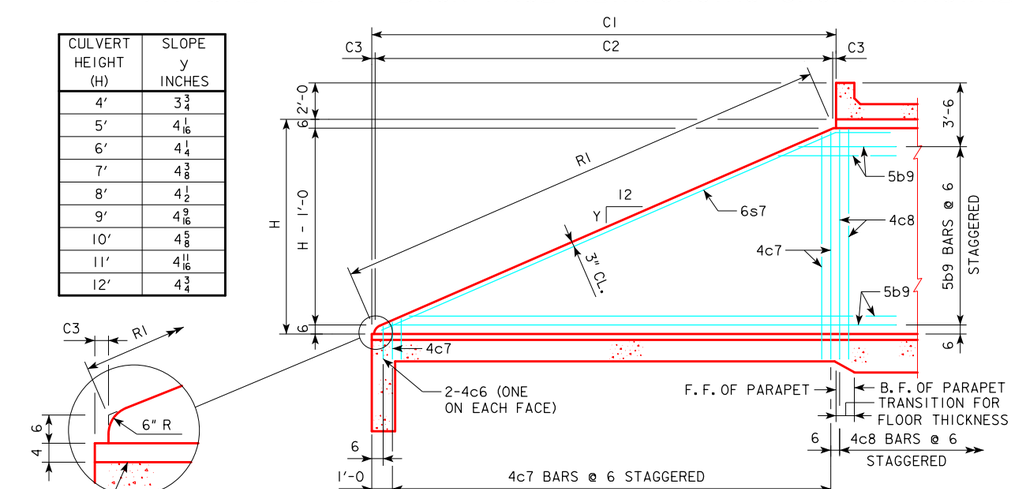

TYPICAL VIEW - INTERIOR WALL

NOTES:

1. BAR SPACINGS AND POSITIONS SHOWN ARE SIMILAR FOR ALL SIZES OF HEADWALLS IN THIS STANDARD.
2. TWO 4c5 & TWO 5c14 BARS FOR 4', 8', 9', 10', 11' & 12' HEIGHT HEADWALLS. ONE 4c5 & ONE 5c14 BAR FOR 5', 6' & 7' HEIGHT HEADWALLS.
3. TWO 4c5 & TWO 5c14 BARS FOR 4', 5', 6', 10', 11' & 12' HEIGHT HEADWALLS. ONE 4c5 & ONE 5c14 BAR FOR 7', 8' & 9' HEIGHT HEADWALLS.
4. NOT APPLICABLE FOR 4' & 5' HEADWALLS.
5. NOT APPLICABLE FOR 4' THRU 8' HEIGHT HEADWALLS.
6. FOR DIMENSION TABLE SEE SHEET TRH 30-2-12.

07-2016
LATEST REVISION DATE

APPROVED BY BRIDGE ENGINEER

IOWA DOT Highway Division

STANDARD DESIGN

TRIPLE REINFORCED CONCRETE BOX CULVERTS

APRIL, 2012

FLARED WING HEADWALLS

30° SKEW

TRH 30-6-12

REVISED 05-13 - CHANGED DIMENSIONS WHEN TO BEGIN PLACING BARS 4c3,5c11, 5c12, & 6c13 IN WINGWALLS.
REVISED 07-2016 - REMOVED 1'-8 VERTICAL DIMENSION FROM 6s5 & 6s6 BARS TO TOP OF PARAPET. THIS VARIANCE IN LOCATION IS CAUSED BY THE DIFFERING WING SIZES OF DIFFERENT SIZED R.C.B. CULVERTS.
ENGLISHLRFDSIGNEDTRIPLECULVERTS.DGN - TRH 30-6-12 - THIS SHEET ISSUED 04-12.

BILL OF REINFORCING FOR ONE HEADWALL 30° SKEW CULVERT SPAN x CULVERT HEIGHT

BAR	LOCATION	SHAPE	12′ x 12′ NO.	12′ x 12′ LENGTH	12′ x 12′ WT.	12′ x 11′ NO.	12′ x 11′ LENGTH	12′ x 11′ WT.	12′ x 10′ NO.	12′ x 10′ LENGTH	12′ x 10′ WT.	12′ x 9′ NO.	12′ x 9′ LENGTH	12′ x 9′ WT.	12′ x 8′ NO.	12′ x 8′ LENGTH	12′ x 8′ WT.	12′ x 7′ NO.	12′ x 7′ LENGTH	12′ x 7′ WT.	12′ x 6′ NO.	12′ x 6′ LENGTH	12′ x 6′ WT.	BAR
5fa	FENCE ANCHOR (GALV.)		2	2′-10	6	2	2′-10	6	2	2′-10	6	2	2′-10	6	2	2′-10	6	2	2′-10	6	2	2′-10	6	5fa
4b1	WINGWALL, B.F.H. LONG		1	54′-2	38	1	50′-0	35	1	45′-10	32	1	41′-8	29	1	37′-6	25	1	33′-4	22	1	29′-2	19	4b1
4b2	WINGWALL, B.F.H. SHORT		1	41′-2	29	1	38′-1	25	1	35′-0	23	1	31′-10	21	1	28′-9	19	1	25′-7	17	1	22′-6	15	4b2
4b3	WINGWALL, B.F.H. LONG		10 VAR.	14′-8 TO 52′-3	228	9 VAR.	14′-8 TO 48′-1	192	8 VAR.	14′-8 TO 43′-11	158	7 VAR.	14′-8 TO 39′-9	127	6 VAR.	14′-8 TO 35′-7	101	5 VAR.	14′-8 TO 31′-5	77	4 VAR.	14′-8 TO 27′-3	56	4b3
4b4	WINGWALL, B.F.H. SHORT		10 VAR.	11′-11 TO 39′-9	173	9 VAR.	11′-11 TO 36′-8	146	8 VAR.	11′-11 TO 33′-7	122	7 VAR.	11′-10 TO 30′-5	99	6 VAR.	11′-10 TO 27′-4	78	5 VAR.	11′-10 TO 24′-3	60	4 VAR.	11′-10 TO 21′-1	44	4b4
5b5	WINGWALL, F.F.H. LONG		1	54′-3	59	1	50′-1	55	1	45′-11	50	1	41′-9	46	1	37′-7	39	1	33′-5	35	1	29′-2	30	5b5
5b6	WINGWALL, F.F.H. SHORT		1	41′-3	45	1	38′-2	40	1	35′-0	37	1	31′-11	33	1	28′-9	30	1	25′-8	27	1	22′-6	23	5b6
5b7	WINGWALL, F.F.H. LONG		11 VAR.	10′-7 TO 52′-4	368	10 VAR.	10′-7 TO 48′-2	311	9 VAR.	10′-7 TO 43′-11	258	8 VAR.	10′-7 TO 39′-9	210	7 VAR.	10′-7 TO 35′-7	169	6 VAR.	10′-7 TO 31′-5	131	5 VAR.	10′-7 TO 27′-3	99	5b7
5b8	WINGWALL, F.F.H. SHORT		11 VAR.	8′-10 TO 39′-10	279	10 VAR.	8′-10 TO 36′-9	238	9 VAR.	8′-10 TO 33′-7	199	8 VAR.	8′-10 TO 30′-6	164	7 VAR.	8′-9 TO 27′-4	132	6 VAR.	8′-9 TO 24′-3	103	5 VAR.	8′-9 TO 21′-1	78	5b8
5b9	INTERIOR WALLS, BOTH F.H.		42 VAR.	2 EA. 5′-7 TO 30′-11	799	38 VAR.	2 EA. 5′-7 TO 28′-8	679	34 VAR.	2 EA. 5′-7 TO 26′-4	566	30 VAR.	2 EA. 5′-7 TO 24′-0	463	26 VAR.	2 EA. 5′-8 TO 21′-9	372	22 VAR.	2 EA. 5′-8 TO 19′-5	288	18 VAR.	2 EA. 5′-9 TO 17′-1	214	5b9
4c1	WINGWALL, F.F.V. LONG		51 VAR.	2′-10 TO 14′-10	301	47 VAR.	2′-10 TO 13′-10	262	43 VAR.	2′-10 TO 12′-11	226	39 VAR.	2′-10 TO 11′-11	192	35 VAR.	2′-10 TO 11′-0	162	31 VAR.	2′-10 TO 10′-0	133	26 VAR.	2′-10 TO 8′-10	101	4c1
4c2	WINGWALL, F.F.V. SHORT		38 VAR.	2′-10 TO 14′-9	223	35 VAR.	2′-10 TO 13′-9	194	32 VAR.	2′-10 TO 12′-10	167	29 VAR.	2′-10 TO 11′-10	142	26 VAR.	2′-10 TO 10′-10	119	23 VAR.	2′-10 TO 9′-11	98	20 VAR.	2′-10 TO 8′-11	78	4c2
4c3	WINGWALL, F.F.V. LONG		23 VAR.	8′-5 TO 13′-9	170	19 VAR.	8′-5 TO 12′-9	134	15 VAR.	8′-5 TO 11′-10	101	11 VAR.	8′-5 TO 10′-10	71	---	---	---	---	---	---	---	---	---	4c3
4c4	WINGWALL, F.F.V. SHORT		18 VAR.	9′-5 TO 14′-11	146	15 VAR.	9′-5 TO 13′-11	117	12 VAR.	9′-5 TO 12′-11	90	9 VAR.	9′-5 TO 12′-0	64	---	---	---	---	---	---	---	---	---	4c4
4c5	WINGWALL, F.F.V. LONG		2	13′-9	18	2	12′-9	17	2	11′-9	16	1	10′-9	7	1	9′-9	7	1	8′-9	6	2	7′-9	10	4c5
4c5	WINGWALL, F.F.V. SHORT		2	13′-9	18	2	12′-9	17	2	11′-9	16	2	10′-9	14	2	9′-9	13	1	8′-9	6	1	7′-9	5	4c5
4c6	INTERIOR WALLS, BOTH F.V.		4	1′-9	5	4	1′-9	5	4	1′-9	5	4	1′-9	5	4	1′-9	5	4	1′-9	5	4	1′-8	4	4c6
4c7	INTERIOR WALLS, BOTH F.V.		108 VAR.	2 EA. 1′-11 TO 12′-4	514	100 VAR.	2 EA. 1′-11 TO 11′-6	448	90 VAR.	2 EA. 1′-11 TO 10′-5	371	82 VAR.	2 EA. 1′-11 TO 9′-6	313	72 VAR.	2 EA. 1′-11 TO 8′-5	248	64 VAR.	2 EA. 1′-11 TO 7′-6	201	54 VAR.	2 EA. 1′-11 TO 6′-6	152	4c7
4c8	INTERIOR WALLS, BOTH F.V.		4	12′-7	34	4	11′-7	31	4	10′-7	28	4	9′-7	26	4	8′-7	23	4	7′-7	20	4	6′-7	18	4c8
5c9	WINGWALL, B.F.V. LONG		11 VAR.	2′-10 TO 5′-3	46	11 VAR.	2′-10 TO 5′-3	46	11 VAR.	2′-10 TO 5′-3	46	11 VAR.	2′-10 TO 5′-3	46	11 VAR.	2′-10 TO 5′-3	46	11 VAR.	2′-10 TO 5′-3	46	11 VAR.	2′-10 TO 5′-3	46	5c9
5c10	WINGWALL, B.F.V. SHORT		5 VAR.	2′-10 TO 4′-2	18	5 VAR.	2′-10 TO 4′-2	18	5 VAR.	2′-10 TO 4′-2	18	5 VAR.	2′-10 TO 4′-2	18	5 VAR.	2′-10 TO 4′-2	18	5 VAR.	2′-10 TO 4′-2	18	5 VAR.	2′-10 TO 4′-2	18	5c10
5c11	WINGWALL, B.F.V. LONG		40 VAR.	9′-6 TO 18′-10	591	36 VAR.	9′-6 TO 17′-10	513	32 VAR.	9′-6 TO 16′-11	441	28 VAR.	9′-6 TO 15′-11	371	24 VAR.	9′-6 TO 15′-0	307	20 VAR.	9′-6 TO 14′-0	245	15 VAR.	9′-6 TO 12′-10	175	5c11
5c12	WINGWALL, B.F.V. SHORT		33 VAR.	8′-6 TO 18′-9	469	30 VAR.	8′-6 TO 17′-9	411	27 VAR.	8′-6 TO 16′-10	357	24 VAR.	8′-6 TO 15′-10	305	21 VAR.	8′-6 TO 14′-10	256	18 VAR.	8′-6 TO 13′-11	210	15 VAR.	8′-6 TO 12′-11	168	5c12
6c13	WINGWALL, B.F.V. LONG		33	10′-6	520	29	10′-6	457	25	10′-6	394	21	10′-6	331	17	10′-6	268	13	10′-6	205	8	10′-6	126	6c13
6c13	WINGWALL, B.F.V. SHORT		25	10′-6	394	22	10′-6	347	19	10′-6	300	16	10′-6	252	13	10′-6	205	10	10′-6	158	7	10′-6	110	6c13
5c14	WINGWALL, B.F.V. LONG		2	17′-9	37	2	16′-9	35	2	15′-9	33	1	14′-9	15	1	13′-9	14	1	12′-9	13	2	11′-9	25	5c14
5c14	WINGWALL, B.F.V. SHORT		2	17′-9	37	2	16′-9	35	2	15′-9	33	2	14′-9	31	2	13′-9	29	1	12′-9	13	1	11′-9	12	5c14
4d1	APRON, LONGIT., BOTT.		25	31′-6	526	25	29′-2	487	25	26′-10	448	25	24′-7	411	25	22′-3	372	25	19′-11	333	25	17′-8	295	4d1
4d2	APRON, LONGIT., BOTT. LONG		3	48′-4	101	3	44′-2	93	3	40′-1	85	3	35′-11	72	3	31′-9	64	3	27′-8	55	3	23′-7	47	4d2
4d3	APRON, LONGIT., BOTT. SHORT		3	36′-10	74	3	33′-9	68	3	30′-8	61	3	27′-7	55	3	24′-6	49	3	21′-5	43	3	18′-4	37	4d3
6f1	APRON, LONGIT., TOP		37	31′-6	1751	37	29′-2	1621	37	26′-10	1491	37	24′-7	1366	37	22′-3	1237	37	19′-11	1107	37	17′-8	982	6f1
6f2	APRON, LONGIT., TOP LONG		11 VAR.	5′-4 TO 28′-6	279	10 VAR.	5′-4 TO 26′-2	237	9 VAR.	5′-4 TO 23′-10	197	8 VAR.	5′-4 TO 21′-7	162	7 VAR.	5′-3 TO 19′-3	129	6 VAR.	5′-3 TO 16′-11	100	5 VAR.	5′-3 TO 14′-7	74	6f2
6f3	APRON, LONGIT., TOP SHORT		8 VAR.	7′-0 TO 28′-8	214	7 VAR.	7′-9 TO 26′-5	180	7 VAR.	5′-5 TO 24′-1	155	6 VAR.	6′-2 TO 21′-9	126	5 VAR.	6′-11 TO 19′-6	99	4 VAR.	7′-9 TO 17′-2	75	4 VAR.	5′-5 TO 14′-10	61	6f3
6f4	APRON, LONGIT., TOP LONG		1	54′-3	85	1	50′-1	79	1	45′-11	72	1	41′-9	66	1	37′-7	56	1	33′-5	50	1	29′-2	44	6f4
6f5	APRON, LONGIT., TOP SHORT		1	41′-3	65	1	38′-2	57	1	35′-0	53	1	31′-11	48	1	28′-9	43	1	25′-8	39	1	22′-6	34	6f5
4i1	PARAPET, VERTICAL		77	6′-4	326	75	6′-4	317	75	6′-4	317	75	6′-4	317	75	6′-4	317	75	6′-4	317	75	6′-4	317	4i1
7ji	PARAPET, HORIZONTAL		4	45′-9	392	4	45′-5	390	4	45′-0	386	4	45′-0	386	4	45′-0	386	4	44′-7	383	4	44′-7	383	7ji
6m1	APRON, TRANS., TOP		16 VAR.	42′-8 TO 45′-6	1113	16 VAR.	42′-4 TO 45′-2	1105	16 VAR.	42′-0 TO 44′-10	1097	15 VAR.	42′-0 TO 44′-7	1026	13 VAR.	42′-0 TO 44′-3	886	10 VAR.	41′-8 TO 43′-4	672	7 VAR.	41′-8 TO 42′-9	467	6m1
6m2	APRON, TRANS., TOP		9 VAR.	45′-9 TO 48′-9	669	6 VAR.	45′-5 TO 47′-4	438	3 VAR.	45′-1 TO 45′-10	215	1 VAR.	44′-9 TO 44′-9	71	3 VAR.	34′-8 TO 37′-3	162	6 VAR.	30′-6 TO 37′-0	304	9 VAR.	26′-6 TO 36′-10	428	6m2
6m3	APRON, TRANS., TOP		29 VAR.	8′-8 TO 39′-9	1054	29 VAR.	7′-10 TO 38′-11	1018	29 VAR.	7′-0 TO 38′-1	982	29 VAR.	6′-4 TO 37′-5	953	25 VAR.	6′-9 TO 33′-5	754	22 VAR.	5′-11 TO 29′-4	582	19 VAR.	5′-3 TO 25′-4	436	6m3
6m4	APRON, TRANS., BOTT.		24 VAR.	38′-10 TO 54′-6	1757	22 VAR.	38′-8 TO 53′-0	1582	20 VAR.	38′-6 TO 51′-5	1408	18 VAR.	38′-6 TO 50′-1	1248	16 VAR.	38′-6 TO 48′-8	1091	14 VAR.	38′-3 TO 47′-2	935	12 VAR.	38′-3 TO 45′-9	787	6m4
6p1	CURTAIN, HORIZONTAL		4	44′-1	278	4	43′-10	277	4	43′-8	276	4	43′-8	276	4	43′-8	276	4	43′-5	274	4	43′-5	274	6p1
6p2	CURTAIN, HORIZONTAL LONG		4	28′-0	168	4	26′-0	156	4	24′-0	144	4	22′-0	132	4	20′-0	120	4	18′-0	108	4	16′-0	96	6p1
6p3	CURTAIN, HORIZONTAL SHORT		4	15′-11	96	4	14′-11	90	4	13′-10	83	4	12′-10	77	4	11′-9	71	4	10′-9	65	4	9′-8	58	6p2
6s1	WING SLOPE, BOTH F. LONG		2	8′-0	24	2	8′-0	24	2	8′-0	24	2	8′-0	24	2	8′-0	24	2	8′-0	24	2	8′-0	24	6s1
6s2	WING SLOPE, BOTH F. SHORT		2	6′-11	21	2	6′-11	21	2	6′-11	21	2	6′-11	21	2	6′-11	21	2	6′-11	21	2	6′-11	21	6s2
6s3	WING SLOPE, BOTH F. LONG		2	49′-4	155	2	45′-0	142	2	40′-9	129	2	36′-5	109	2	32′-2	97	2	27′-10	84	2	23′-7	71	6s3
6s4	WING SLOPE, BOTH F. SHORT		2	38′-6	116	2	35′-2	106	2	31′-11	96	2	28′-8	86	2	25′-4	76	2	22′-1	66	2	18′-10	57	6s4
6s5	WING SLOPE, F.F. LONG		1	54′-7	85	1	50′-3	79	1	46′-0	72	1	41′-8	66	1	37′-5	56	1	33′-1	50	1	28′-10	43	6s5
6s6	WING SLOPE, F.F. SHORT		1	42′-7	67	1	39′-4	59	1	36′-1	54	1	32′-9	49	1	29′-6	44	1	26′-3	39	1	22′-11	34	6s6
6s7	INTERIOR WALLS, BOTH F.H.		4	32′-10	197	4	30′-5	183	4	27′-11	168	4	25′-5	153	4	22′-11	138	4	20′-5	123	4	17′-11	108	6s7
5t1	CURTAIN, VERTICAL		60	7′-11	495	58	7′-8	464	55	7′-5	425	53	7′-2	396	50	6′-11	361	48	6′-8	334	45	6′-5	301	5t1
ESTIMATED QUANTITIES ONE HEADWALL	REINF. STEEL			15,673 LB			14,087 LB			12,552 LB			11,097 LB			9620 LB			8326 LB			7111 LB		
	CONCRETE	PARAPET Δ	4.4			4.3			4.2			4.2			4.2			4.1			4.1			
		WINGWALLS	40.1	133.9 CY		31.5	115.9 CY		24.1	99.4 CY		20.0	87.4 CY		16.3	76.1 CY		11.6	63.5 CY		8.9	53.9 CY		
		FOOTING *	89.4			80.1			71.1			63.2			55.6			47.8			40.9			

BENT BAR DETAILS

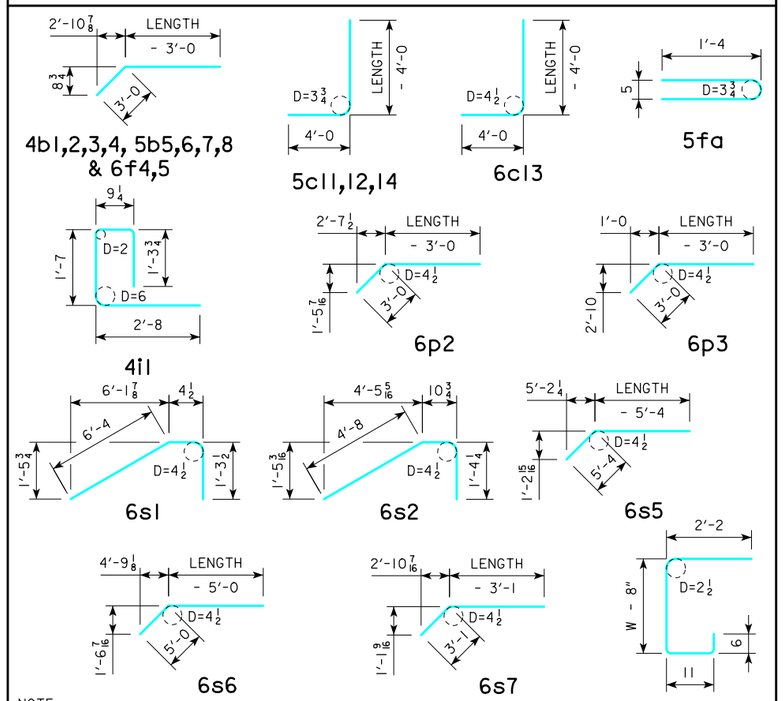

NOTE:
ALL DIMENSIONS ARE OUT TO OUT. D = PIN DIAMETER.

Δ INCLUDES TOP OF WINGWALL QUANTITIES.
* ASSUMES APRON AND FLOOR ARE EQUAL THICKNESS, ADJUST CONCRETE QUANTITIES FOR TRANSITION WHERE APRON AND FLOOR THICKNESS ARE NOT EQUAL.

NOTE:
WEIGHT OF BARS OVER 40′-0 LONG INCLUDES AN ALLOWANCE OF 2′-3 FOR LAP.
LENGTHS SHOWN FOR BARS OVER 40′-0 LONG DO NOT INCLUDE LAP.

"SHORT" DENOTES SHORT WINGWALL
"LONG" DENOTES LONG WINGWALL

HEADWALL NOTES:

1. SEE DRAWING TRRCB GI-12 FOR GENERAL INFORMATION, SPECIFICATIONS, AND DESIGN STRESSES.
2. THIS HEADWALL IS BASED ON A 3:1 SLOPE NORMAL TO CENTERLINE OF ROADWAY.
3. THE SIDES OF THE FOOTING ARE TO BE FORMED TO INSURE CORRECT LINE AND GRADE.
4. ALL SLAB AND FLOOR REINFORCING STEEL IS TO BE SUPPORTED BY BAR CHAIRS AT INTERVALS OF NOT MORE THAN 3′-0 IN EITHER DIRECTION AS OUTLINED IN THE STANDARD SPECIFICATIONS.
5. CLEAR DISTANCE FROM FACE OF CONCRETE TO NEAR REINFORCING BAR IS TO BE 2" UNLESS OTHERWISE NOTED OR SHOWN. CLEARANCE TO THE BOTTOM ENDS OF VERTICAL BARS SHALL BE 3 INCHES.
6. CONCRETE QUANTITIES ARE ESTIMATED FROM BACK OF PARAPET.
7. HORIZONTAL TAILS OF BARS "b" & "s" ESTIMATED TO EXTEND 2′-0 BEYOND BACK OF PARAPET (INTO END OF BARREL). LONGITUDINAL BARS "d", "6f1", AND "6f3" ESTIMATED TO PROJECT INTO END SECTION OF BARREL A MINIMUM OF 2′-0 BEYOND BACK OF PARAPET.
8. THE "LENGTH" COLUMN REFLECTS TOTAL NUMBER OF FEET NECESSARY TO MEET THESE REQUIREMENTS.

LATEST REVISION DATE

APPROVED BY BRIDGE ENGINEER

IOWA DOT Highway Division

STANDARD DESIGN

TRIPLE REINFORCED CONCRETE BOX CULVERTS

APRIL, 2012

FLARED WING HEADWALLS

30° SKEW

TRH 30-7-12

ENGLISHLRFDSIGNEDTRIPLECULVERTS.DGN - TRH 30-7-12 - THIS SHEET ISSUED 04-12.

BILL OF REINFORCING FOR ONE HEADWALL 30° SKEW CULVERT SPAN x CULVERT HEIGHT

BAR	LOCATION	SHAPE	12′ x 5′			12′ x 4′			10′ x 12′			10′ x 11′			10′ x 10′			10′ x 9′			10′ x 8′			BAR
			NO.	LENGTH	WT.	NO.	LENGTH	WT.	NO.	LENGTH	WT.	NO.	LENGTH	WT.	NO.	LENGTH	WT.	NO.	LENGTH	WT.	NO.	LENGTH	WT.	
5fa	FENCE ANCHOR (GALV.)		2	2′-10	6	2	2′-10	6	2	2′-10	6	2	2′-10	6	2	2′-10	6	2	2′-10	6	2	2′-10	6	5fa
4b1	WINGWALL, B.F.H. LONG		1	25′-0	17	1	20′-10	14	1	54′-2	38	1	50′-0	35	1	45′-10	32	1	41′-8	29	1	37′-6	25	4b1
4b2	WINGWALL, B.F.H. SHORT		1	19′-5	13	1	16′-3	11	1	41′-2	29	1	38′-1	25	1	35′-0	23	1	31′-10	21	1	28′-9	19	4b2
4b3	WINGWALL, B.F.H. LONG		3 VAR.	14′-8 TO 23′-1	38	2 VAR.	14′-8 TO 18′-10	22	10 VAR.	14′-8 TO 52′-3	228	9 VAR.	14′-8 TO 48′-1	192	8 VAR.	14′-8 TO 43′-11	158	7 VAR.	14′-8 TO 39′-9	127	6 VAR.	14′-8 TO 35′-7	101	4b3
4b4	WINGWALL, B.F.H. SHORT		3 VAR.	11′-9 TO 18′-0	30	2 VAR.	11′-9 TO 14′-10	18	10 VAR.	11′-11 TO 39′-9	173	9 VAR.	11′-11 TO 36′-8	146	8 VAR.	11′-11 TO 33′-7	122	7 VAR.	11′-10 TO 30′-5	99	6 VAR.	11′-10 TO 27′-4	78	4b4
5b5	WINGWALL, F.F.H. LONG		1	25′-0	26	1	20′-10	22	1	54′-3	59	1	50′-1	55	1	45′-11	50	1	41′-9	46	1	37′-7	39	5b5
5b6	WINGWALL, F.F.H. SHORT		1	19′-5	20	1	16′-4	17	1	41′-3	45	1	38′-2	40	1	35′-0	37	1	31′-11	33	1	28′-9	30	5b6
5b7	WINGWALL, F.F.H. LONG		4 VAR.	10′-7 TO 23′-1	70	3 VAR.	10′-7 TO 18′-11	46	11 VAR.	10′-7 TO 52′-4	368	10 VAR.	10′-7 TO 48′-2	311	9 VAR.	10′-7 TO 43′-11	258	8 VAR.	10′-7 TO 39′-9	210	7 VAR.	10′-7 TO 35′-7	169	5b7
5b8	WINGWALL, F.F.H. SHORT		4 VAR.	8′-9 TO 18′-0	56	3 VAR.	8′-8 TO 14′-11	37	11 VAR.	8′-10 TO 39′-10	279	10 VAR.	8′-10 TO 36′-9	238	9 VAR.	8′-10 TO 33′-7	199	8 VAR.	8′-10 TO 30′-6	164	7 VAR.	8′-9 TO 27′-4	132	5b8
5b9	INTERIOR WALLS, BOTH F.H.		14 VAR.	2 EA. 5′-10 TO 14′-9	150	10 VAR.	2 EA. 6′-1 TO 12′-5	96	42 VAR.	2 EA. 5′-7 TO 30′-11	799	38 VAR.	2 EA. 5′-7 TO 28′-8	679	34 VAR.	2 EA. 5′-7 TO 26′-4	566	30 VAR.	2 EA. 5′-7 TO 24′-0	463	26 VAR.	2 EA. 5′-8 TO 21′-9	372	5b9
4c1	WINGWALL, F.F.V. LONG		22 VAR.	2′-10 TO 7′-10	78	18 VAR.	2′-10 TO 6′-11	59	51 VAR.	2′-9 TO 14′-9	298	47 VAR.	2′-9 TO 13′-9	259	43 VAR.	2′-9 TO 12′-10	224	39 VAR.	2′-9 TO 11′-10	190	35 VAR.	2′-9 TO 10′-11	160	4c1
4c2	WINGWALL, F.F.V. SHORT		17 VAR.	2′-10 TO 8′-0	62	14 VAR.	2′-10 TO 7′-0	46	38 VAR.	2′-9 TO 14′-8	221	35 VAR.	2′-9 TO 13′-8	192	32 VAR.	2′-9 TO 12′-9	166	29 VAR.	2′-9 TO 11′-9	140	26 VAR.	2′-9 TO 10′-9	117	4c2
4c3	WINGWALL, F.F.V. LONG		---	---	---	---	---	---	23 VAR.	8′-4 TO 13′-8	169	19 VAR.	8′-4 TO 12′-8	133	15 VAR.	8′-4 TO 11′-9	101	11 VAR.	8′-4 TO 10′-9	70	---	---	---	4c3
4c4	WINGWALL, F.F.V. SHORT		---	---	---	---	---	---	18 VAR.	9′-4 TO 14′-10	145	15 VAR.	9′-4 TO 13′-10	116	12 VAR.	9′-4 TO 12′-10	89	9 VAR.	9′-4 TO 11′-11	64	---	---	---	4c4
4c5	WINGWALL, F.F.V. LONG		2	6′-9	9	2	5′-9	8	2	13′-8	18	2	12′-8	17	2	11′-8	16	1	10′-8	7	1	9′-8	6	4c5
4c5	WINGWALL, F.F.V. SHORT		1	6′-9	5	2	5′-9	8	2	13′-8	18	2	12′-8	17	2	11′-8	16	2	10′-8	14	2	9′-8	13	4c5
4c6	INTERIOR WALLS, BOTH F.V.		4	1′-8	4	4	1′-8	4	4	1′-8	4	4	1′-8	4	4	1′-8	4	4	1′-8	4	4	1′-8	4	4c6
4c7	INTERIOR WALLS, BOTH F.V.		44 VAR.	2 EA. 1′-10 TO 5′-5	107	36 VAR.	2 EA. 1′-10 TO 4′-6	76	108 VAR.	2 EA. 1′-10 TO 12′-3	508	100 VAR.	2 EA. 1′-10 TO 11′-5	443	90 VAR.	2 EA. 1′-10 TO 10′-4	366	82 VAR.	2 EA. 1′-10 TO 9′-5	308	72 VAR.	2 EA. 1′-10 TO 8′-4	244	4c7
4c8	INTERIOR WALLS, BOTH F.V.		4	5′-7	15	4	4′-7	12	4	12′-6	33	4	11′-6	31	4	10′-6	28	4	9′-6	25	4	8′-6	23	4c8
5c9	WINGWALL, B.F.V. LONG		11 VAR.	2′-10 TO 5′-3	46	11 VAR.	2′-10 TO 5′-3	46	11 VAR.	2′-9 TO 5′-2	45	11 VAR.	2′-9 TO 5′-2	45	11 VAR.	2′-9 TO 5′-2	45	11 VAR.	2′-9 TO 5′-2	45	11 VAR.	2′-9 TO 5′-2	45	5c9
5c10	WINGWALL, B.F.V. SHORT		5 VAR.	2′-10 TO 4′-2	18	5 VAR.	2′-10 TO 4′-2	18	5 VAR.	2′-9 TO 4′-1	18	5 VAR.	2′-9 TO 4′-1	18	5 VAR.	2′-9 TO 4′-1	18	5 VAR.	2′-9 TO 4′-1	18	5 VAR.	2′-9 TO 4′-1	18	5c10
5c11	WINGWALL, B.F.V. LONG		11 VAR.	9′-6 TO 11′-10	122	7 VAR.	9′-6 TO 10′-11	75	40 VAR.	9′-5 TO 18′-9	588	36 VAR.	9′-5 TO 17′-9	510	32 VAR.	9′-5 TO 16′-10	438	28 VAR.	9′-5 TO 15′-10	369	24 VAR.	9′-5 TO 14′-11	305	5c11
5c12	WINGWALL, B.F.V. SHORT		12 VAR.	8′-6 TO 12′-0	128	9 VAR.	8′-6 TO 11′-0	92	33 VAR.	8′-5 TO 18′-8	466	30 VAR.	8′-5 TO 17′-8	408	27 VAR.	8′-5 TO 16′-9	354	24 VAR.	8′-5 TO 15′-9	302	21 VAR.	8′-5 TO 14′-9	254	5c12
6c13	WINGWALL, B.F.V. LONG		---	---	---	---	---	---	33	10′-6	520	29	10′-6	457	25	10′-6	394	21	10′-6	331	17	10′-6	268	6c13
6c13	WINGWALL, B.F.V. SHORT		---	---	---	---	---	---	25	10′-6	394	22	10′-6	347	19	10′-6	300	16	10′-6	252	13	10′-6	205	6c13
5c14	WINGWALL, B.F.V. LONG		2	10′-9	22	2	9′-9	20	2	17′-8	37	2	16′-8	35	2	15′-8	33	1	14′-8	15	1	13′-8	14	5c14
5c14	WINGWALL, B.F.V. SHORT		1	10′-9	11	2	9′-9	20	2	17′-8	37	2	16′-8	35	2	15′-8	33	2	14′-8	31	2	13′-8	29	5c14
4d1	APRON, LONGIT., BOTT.		25	15′-4	256	25	13′-0	217	21	31′-6	442	21	29′-2	409	21	26′-10	376	21	24′-7	345	21	22′-3	312	4d1
4d2	APRON, LONGIT., BOTT. LONG		3	19′-6	39	3	15′-5	31	3	48′-4	101	3	44′-2	93	3	40′-1	85	3	35′-11	72	3	31′-9	64	4d2
4d3	APRON, LONGIT., BOTT. SHORT		3	15′-3	31	3	12′-3	25	3	36′-10	74	3	33′-9	68	3	30′-8	61	3	27′-7	55	3	24′-6	49	4d3
6f1	APRON, LONGIT., TOP		37	15′-4	852	37	13′-0	722	31	31′-6	1467	31	29′-2	1358	31	26′-10	1249	31	24′-7	1145	31	22′-3	1036	6f1
6f2	APRON, LONGIT., TOP LONG		4 VAR.	5′-3 TO 12′-4	53	3 VAR.	5′-3 TO 10′-0	34	11 VAR.	5′-4 TO 28′-6	279	10 VAR.	5′-4 TO 26′-2	237	9 VAR.	5′-4 TO 23′-10	197	8 VAR.	5′-4 TO 21′-7	162	7 VAR.	5′-3 TO 19′-3	129	6f2
6f3	APRON, LONGIT., TOP SHORT		3 VAR.	6′-2 TO 12′-6	42	2 VAR.	7′-0 TO 10′-3	26	8 VAR.	7′-0 TO 28′-8	214	7 VAR.	7′-9 TO 26′-5	180	7 VAR.	5′-5 TO 24′-1	155	6 VAR.	6′-2 TO 21′-9	126	5 VAR.	6′-11 TO 19′-6	99	6f3
6f4	APRON, LONGIT., TOP LONG		1	25′-0	38	1	20′-10	31	1	54′-3	85	1	50′-1	79	1	45′-11	72	1	41′-9	66	1	37′-7	56	6f4
6f5	APRON, LONGIT., TOP SHORT		1	19′-5	29	1	16′-4	25	1	41′-3	65	1	38′-2	57	1	35′-0	53	1	31′-11	48	1	28′-9	43	6f5
4i1	PARAPET, VERTICAL		75	6′-4	317	75	6′-4	317	65	6′-4	275	63	6′-4	267	63	6′-4	267	63	6′-4	267	63	6′-4	267	4i1
7ji	PARAPET, HORIZONTAL		4	44′-7	383	4	44′-7	383	4	38′-10	318	4	38′-5	314	4	38′-1	311	4	38′-1	311	4	38′-1	311	7ji
6m1	APRON, TRANS., TOP		4 VAR.	41′-8 TO 42′-3	266	1 VAR.	41′-8 TO 41′-8	66	14 VAR.	36′-3 TO 38′-8	788	14 VAR.	35′-11 TO 38′-4	781	14 VAR.	35′-7 TO 38′-0	774	13 VAR.	35′-7 TO 37′-10	717	14 VAR.	35′-7 TO 38′-0	774	6m1
6m2	APRON, TRANS., TOP		12 VAR.	22′-6 TO 36′-9	534	15 VAR.	18′-6 TO 36′-8	621	13 VAR.	39′-0 TO 43′-6	839	10 VAR.	38′-8 TO 42′-1	627	7 VAR.	38′-4 TO 40′-7	422	5 VAR.	38′-0 TO 39′-6	291	1 VAR.	38′-4 TO 38′-4	58	6m2
6m3	APRON, TRANS., TOP		16 VAR.	4′-7 TO 21′-4	311	13 VAR.	3′-11 TO 17′-4	207	25 VAR.	8′-4 TO 35′-0	814	24 VAR.	8′-7 TO 34′-2	771	24 VAR.	7′-9 TO 33′-4	740	24 VAR.	7′-1 TO 32′-8	716	24 VAR.	6′-5 TO 32′-0	692	6m3
6m4	APRON, TRANS., BOTT.		10 VAR.	38′-3 TO 44′-5	644	8 VAR.	38′-3 TO 43′-1	506	24 VAR.	31′-11 TO 47′-7	1473	22 VAR.	31′-9 TO 46′-0	1315	20 VAR.	31′-7 TO 44′-6	1167	18 VAR.	31′-7 TO 43′-1	1026	16 VAR.	31′-7 TO 41′-9	891	6m4
6p1	CURTAIN, HORIZONTAL		4	43′-5	274	4	43′-5	274	4	37′-2	223	4	36′-11	222	4	36′-9	221	4	36′-9	221	4	36′-9	221	6p1
6p2	CURTAIN, HORIZONTAL LONG		4	13′-11	84	4	11′-11	72	4	28′-0	168	4	26′-0	156	4	24′-0	144	4	22′-0	132	4	20′-0	120	6p1
6p3	CURTAIN, HORIZONTAL SHORT		4	8′-8	52	4	7′-7	46	4	15′-11	96	4	14′-11	90	4	13′-10	83	4	12′-10	77	4	11′-9	71	6p2
6s1	WING SLOPE, BOTH F. LONG		2	8′-0	24	2	8′-0	24	2	8′-0	24	2	8′-0	24	2	8′-0	24	2	8′-0	24	2	8′-0	24	6s1
6s2	WING SLOPE, BOTH F. SHORT		2	6′-11	21	2	6′-11	21	2	6′-11	21	2	6′-11	21	2	6′-11	21	2	6′-11	21	2	6′-11	21	6s2
6s3	WING SLOPE, BOTH F. LONG		2	19′-3	58	2	15′-0	45	2	49′-4	155	2	45′-0	142	2	40′-9	129	2	36′-5	109	2	32′-2	97	6s3
6s4	WING SLOPE, BOTH F. SHORT		2	15′-7	47	2	12′-3	37	2	38′-6	116	2	35′-2	106	2	31′-11	96	2	28′-8	86	2	25′-4	76	6s4
6s5	WING SLOPE, F.F. LONG		1	24′-6	37	1	20′-3	30	1	54′-7	85	1	50′-3	79	1	46′-0	72	1	41′-8	66	1	37′-5	56	6s5
6s6	WING SLOPE, F.F. SHORT		1	19′-8	30	1	16′-5	25	1	42′-7	67	1	39′-4	59	1	36′-1	54	1	32′-9	49	1	29′-6	44	6s6
6s7	INTERIOR WALLS, BOTH F.H.		4	15′-5	93	4	12′-11	78	4	32′-10	197	4	30′-5	183	4	27′-11	168	4	25′-5	153	4	22′-11	138	6s7
5t1	CURTAIN, VERTICAL		43	6′-5	288	41	6′-5	274	54	7′-11	446	52	7′-8	416	49	7′-5	379	47	7′-2	351	44	6′-11	317	5t1
ESTIMATED QUANTITIES ONE HEADWALL	REINF. STEEL		5856 LB			4910 LB			14,375 LB			12,848 LB			11,396 LB			10,019 LB			8642 LB			
	CONCRETE	PARAPET Δ	4.1	45.5 CY		4.1	37.7 CY		3.9	120.5 CY		3.8	103.6 CY		3.7	88.3 CY		3.7	77.3 CY		3.7	67.0 CY		
		WINGWALLS	6.5			4.4			40.1			31.5			24.1			20.0			16.3			
		FOOTING *	34.9			29.2			76.5			68.3			60.5			53.6			47.0			

BENT BAR DETAILS

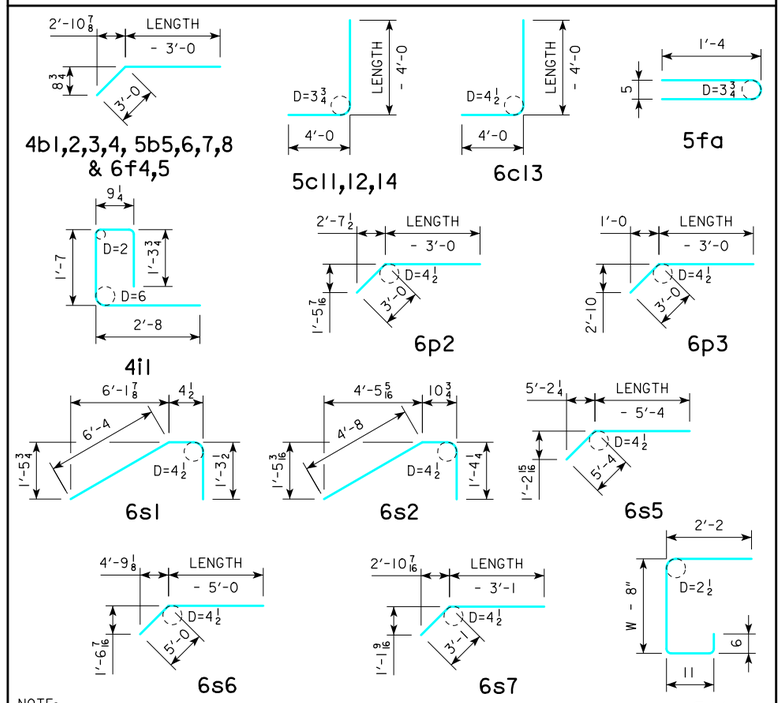

Δ INCLUDES TOP OF WINGWALL QUANTITIES.
* ASSUMES APRON AND FLOOR ARE EQUAL THICKNESS, ADJUST CONCRETE QUANTITIES FOR TRANSITION WHERE APRON AND FLOOR THICKNESS ARE NOT EQUAL.

NOTE:
WEIGHT OF BARS OVER 40′-0 LONG INCLUDES AN ALLOWANCE OF 2′-3 FOR LAP.
LENGTHS SHOWN FOR BARS OVER 40′-0 LONG DO NOT INCLUDE LAP.

"SHORT" DENOTES SHORT WINGWALL
"LONG" DENOTES LONG WINGWALL

HEADWALL NOTES:

1. SEE DRAWING TRRCB GI-12 FOR GENERAL INFORMATION, SPECIFICATIONS, AND DESIGN STRESSES.
2. THIS HEADWALL IS BASED ON A 3:1 SLOPE NORMAL TO CENTERLINE OF ROADWAY.
3. THE SIDES OF THE FOOTING ARE TO BE FORMED TO INSURE CORRECT LINE AND GRADE.
4. ALL SLAB AND FLOOR REINFORCING STEEL IS TO BE SUPPORTED BY BAR CHAIRS AT INTERVALS OF NOT MORE THAN 3′-0 IN EITHER DIRECTION AS OUTLINED IN THE STANDARD SPECIFICATIONS.
5. CLEAR DISTANCE FROM FACE OF CONCRETE TO NEAR REINFORCING BAR IS TO BE 2″ UNLESS OTHERWISE NOTED OR SHOWN. CLEARANCE TO THE BOTTOM ENDS OF VERTICAL BARS SHALL BE 3 INCHES.
6. CONCRETE QUANTITIES ARE ESTIMATED FROM BACK OF PARAPET.
7. HORIZONTAL TAILS OF BARS "b" & "s" ESTIMATED TO EXTEND 2′-0 BEYOND BACK OF PARAPET (INTO END OF BARREL). LONGITUDINAL BARS "d", "6f1", AND "6f3" ESTIMATED TO PROJECT INTO END SECTION OF BARREL A MINIMUM OF 2′-0 BEYOND BACK OF PARAPET.
8. THE "LENGTH" COLUMN REFLECTS TOTAL NUMBER OF FEET NECESSARY TO MEET THESE REQUIREMENTS.

LATEST REVISION DATE

APPROVED BY BRIDGE ENGINEER

IOWA DOT Highway Division

STANDARD DESIGN

TRIPLE REINFORCED CONCRETE BOX CULVERTS

APRIL, 2012

FLARED WING HEADWALLS

30° SKEW

TRH 30-8-12

ENGLISHLRFDSIGNEDTRIPLECULVERTS.DGN - TRH 30-8-12 - THIS SHEET ISSUED 04-12.

BILL OF REINFORCING FOR ONE HEADWALL 30° SKEW CULVERT SPAN x CULVERT HEIGHT

BAR	LOCATION	SHAPE	10′ x 7′ NO.	10′ x 7′ LENGTH	10′ x 7′ WT.	10′ x 6′ NO.	10′ x 6′ LENGTH	10′ x 6′ WT.	10′ x 5′ NO.	10′ x 5′ LENGTH	10′ x 5′ WT.	10′ x 4′ NO.	10′ x 4′ LENGTH	10′ x 4′ WT.	BAR
5fa	FENCE ANCHOR (GALV.)		2	2′-10	6	2	2′-10	6	2	2′-10	6	2	2′-10	6	5fa
4b1	WINGWALL, B.F.H. LONG		1	33′-4	22	1	29′-2	19	1	25′-0	17	1	20′-10	14	4b1
4b2	WINGWALL, B.F.H. SHORT		1	25′-7	17	1	22′-6	15	1	19′-5	13	1	16′-3	11	4b2
4b3	WINGWALL, B.F.H. LONG		5 VAR.	14′-8 TO 31′-5	77	4 VAR.	14′-8 TO 27′-3	56	3 VAR.	14′-8 TO 23′-1	38	2 VAR.	14′-8 TO 18′-10	22	4b3
4b4	WINGWALL, B.F.H. SHORT		5 VAR.	11′-10 TO 24′-3	60	4 VAR.	11′-10 TO 21′-1	44	3 VAR.	11′-9 TO 18′-0	30	2 VAR.	11′-9 TO 14′-10	18	4b4
5b5	WINGWALL, F.F.H. LONG		1	33′-5	35	1	29′-2	30	1	25′-0	26	1	20′-10	22	5b5
5b6	WINGWALL, F.F.H. SHORT		1	25′-8	27	1	22′-6	23	1	19′-5	20	1	16′-4	17	5b6
5b7	WINGWALL, F.F.H. LONG		6 VAR.	10′-7 TO 31′-5	131	5 VAR.	10′-7 TO 27′-3	99	4 VAR.	10′-7 TO 23′-1	70	3 VAR.	10′-7 TO 18′-11	46	5b7
5b8	WINGWALL, F.F.H. SHORT		6 VAR.	8′-9 TO 24′-3	103	5 VAR.	8′-9 TO 21′-1	78	4 VAR.	8′-9 TO 18′-0	56	3 VAR.	8′-8 TO 14′-11	37	5b8
5b9	INTERIOR WALLS, BOTH F.H.		22 VAR.	2 EA. 5′-8 TO 19′-5	288	18 VAR.	2 EA. 5′-9 TO 17′-1	214	14 VAR.	2 EA. 5′-10 TO 14′-9	150	10 VAR.	2 EA. 6′-1 TO 12′-5	96	5b9
4c1	WINGWALL, F.F.V. LONG		31 VAR.	2′-9 TO 9′-11	131	26 VAR.	2′-9 TO 8′-9	100	22 VAR.	2′-9 TO 7′-9	77	18 VAR.	2′-9 TO 6′-10	58	4c1
4c2	WINGWALL, F.F.V. SHORT		23 VAR.	2′-9 TO 9′-10	97	20 VAR.	2′-9 TO 8′-10	77	17 VAR.	2′-9 TO 7′-11	61	14 VAR.	2′-9 TO 6′-11	45	4c2
4c3	WINGWALL, F.F.V. LONG		---	---	---	---	---	---	---	---	---	---	---	---	4c3
4c4	WINGWALL, F.F.V. SHORT		---	---	---	---	---	---	---	---	---	---	---	---	4c4
4c5	WINGWALL, F.F.V. LONG		1	8′-8	6	2	7′-8	10	2	6′-8	9	2	5′-8	8	4c5
4c5	WINGWALL, F.F.V. SHORT		1	8′-8	6	1	7′-8	5	1	6′-8	4	2	5′-8	8	4c5
4c6	INTERIOR WALLS, BOTH F.V.		4	1′-8	4	4	1′-7	4	4	1′-7	4	4	1′-7	4	4c6
4c7	INTERIOR WALLS, BOTH F.V.		64 VAR.	2 EA. 1′-10 TO 7′-5	198	54 VAR.	2 EA. 1′-10 TO 6′-5	149	44 VAR.	2 EA. 1′-9 TO 5′-4	104	36 VAR.	2 EA. 1′-9 TO 4′-5	74	4c7
4c8	INTERIOR WALLS, BOTH F.V.		4	7′-6	20	4	6′-6	17	4	5′-6	15	4	4′-6	12	4c8
5c9	WINGWALL, B.F.V. LONG		11 VAR.	2′-9 TO 5′-2	45	11 VAR.	2′-9 TO 5′-2	45	11 VAR.	2′-9 TO 5′-2	45	11 VAR.	2′-9 TO 5′-2	45	5c9
5c10	WINGWALL, B.F.V. SHORT		5 VAR.	2′-9 TO 4′-1	18	5 VAR.	2′-9 TO 4′-1	18	5 VAR.	2′-9 TO 4′-1	18	5 VAR.	2′-9 TO 4′-1	18	5c10
5c11	WINGWALL, B.F.V. LONG		20 VAR.	9′-5 TO 13′-11	243	15 VAR.	9′-5 TO 12′-9	173	11 VAR.	9′-5 TO 11′-9	121	7 VAR.	9′-5 TO 10′-10	74	5c11
5c12	WINGWALL, B.F.V. SHORT		18 VAR.	8′-5 TO 13′-10	209	15 VAR.	8′-5 TO 12′-10	166	12 VAR.	8′-5 TO 11′-11	127	9 VAR.	8′-5 TO 10′-11	91	5c12
6c13	WINGWALL, B.F.V. LONG		13	10′-6	205	8	10′-6	126	---	---	---	---	---	---	6c13
6c13	WINGWALL, B.F.V. SHORT		10	10′-6	158	7	10′-6	110	---	---	---	---	---	---	6c13
5c14	WINGWALL, B.F.V. LONG		1	12′-8	13	2	11′-8	24	2	10′-8	22	2	9′-8	20	5c14
5c14	WINGWALL, B.F.V. SHORT		1	12′-8	13	1	11′-8	12	1	10′-8	11	2	9′-8	20	5c14
4d1	APRON, LONGIT., BOTT.		21	19′-11	279	21	17′-8	248	21	15′-4	215	21	13′-0	182	4d1
4d2	APRON, LONGIT., BOTT. LONG		3	27′-8	55	3	23′-7	47	3	19′-6	39	3	15′-5	31	4d2
4d3	APRON, LONGIT., BOTT. SHORT		3	21′-5	43	3	18′-4	37	3	15′-3	31	3	12′-3	25	4d3
6f1	APRON, LONGIT., TOP		31	19′-11	927	31	17′-8	823	31	15′-4	714	31	13′-0	605	6f1
6f2	APRON, LONGIT., TOP LONG		6 VAR.	5′-3 TO 16′-11	100	5 VAR.	5′-3 TO 14′-7	74	4 VAR.	5′-3 TO 12′-4	53	3 VAR.	5′-3 TO 10′-0	34	6f2
6f3	APRON, LONGIT., TOP SHORT		4 VAR.	7′-9 TO 17′-2	75	4 VAR.	5′-5 TO 14′-10	61	3 VAR.	6′-2 TO 12′-6	42	2 VAR.	7′-0 TO 10′-3	26	6f3
6f4	APRON, LONGIT., TOP LONG		1	33′-5	50	1	29′-2	44	1	25′-0	38	1	20′-10	31	6f4
6f5	APRON, LONGIT., TOP SHORT		1	25′-8	39	1	22′-6	34	1	19′-5	29	1	16′-4	25	6f5
4i1	PARAPET, VERTICAL		63	6′-4	267	63	6′-4	267	63	6′-4	267	63	6′-4	267	4i1
7ji	PARAPET, HORIZONTAL		4	37′-8	308	4	37′-8	308	4	37′-8	308	4	37′-8	308	7ji
6m1	APRON, TRANS., TOP		12 VAR.	35′-3 TO 37′-3	653	9 VAR.	35′-3 TO 36′-9	487	6 VAR.	35′-3 TO 36′-2	322	3 VAR.	35′-3 TO 35′-7	160	6m1
6m2	APRON, TRANS., TOP		2 VAR.	30′-1 TO 31′-5	92	5 VAR.	26′-1 TO 31′-3	215	8 VAR.	22′-1 TO 31′-2	320	11 VAR.	18′-1 TO 31′-1	406	6m2
6m3	APRON, TRANS., TOP		22 VAR.	5′-7 TO 28′-11	570	19 VAR.	4′-11 TO 24′-11	426	16 VAR.	4′-3 TO 20′-11	302	13 VAR.	3′-7 TO 16′-11	200	6m3
6m4	APRON, TRANS., BOTT.		14 VAR.	31′-4 TO 40′-3	756	12 VAR.	31′-4 TO 38′-10	632	10 VAR.	31′-4 TO 37′-6	517	8 VAR.	31′-4 TO 36′-2	406	6m4
6p1	CURTAIN, HORIZONTAL		4	36′-6	219	4	36′-6	219	4	36′-6	219	4	36′-6	219	6p1
6p2	CURTAIN, HORIZONTAL LONG		4	18′-0	108	4	16′-0	96	4	13′-11	84	4	11′-11	72	6p1
6p3	CURTAIN, HORIZONTAL SHORT		4	10′-9	65	4	9′-8	58	4	8′-8	52	4	7′-7	46	6p2
6s1	WING SLOPE, BOTH F. LONG		2	8′-0	24	2	8′-0	24	2	8′-0	24	2	8′-0	24	6s1
6s2	WING SLOPE, BOTH F. SHORT		2	6′-11	21	2	6′-11	21	2	6′-11	21	2	6′-11	21	6s2
6s3	WING SLOPE, BOTH F. LONG		2	27′-10	84	2	23′-7	71	2	19′-3	58	2	15′-0	45	6s3
6s4	WING SLOPE, BOTH F. SHORT		2	22′-1	66	2	18′-10	57	2	15′-7	47	2	12′-3	37	6s4
6s5	WING SLOPE, F.F. LONG		1	33′-1	50	1	28′-10	43	1	24′-6	37	1	20′-3	30	6s5
6s6	WING SLOPE, F.F. SHORT		1	26′-3	39	1	22′-11	34	1	19′-8	30	1	16′-5	25	6s6
6s7	INTERIOR WALLS, BOTH F.H.		4	20′-5	123	4	17′-11	108	4	15′-5	93	4	12′-11	78	6s7
5t1	CURTAIN, VERTICAL		42	6′-8	292	39	6′-5	261	37	6′-5	248	35	6′-5	234	5t1

ESTIMATED QUANTITIES ONE HEADWALL			10′ x 7′	10′ x 6′	10′ x 5′	10′ x 4′
	REINF. STEEL		7437 LB	6315 LB	5154 LB	4303 LB
	CONCRETE	PARAPET Δ	3.6	3.6	3.6	3.6
		WINGWALLS	11.6	8.9	6.5	4.4
		FOOTING *	40.3	34.3	29.2	24.4
	CONCRETE		55.5 CY	46.8 CY	39.3 CY	32.4 CY

BENT BAR DETAILS

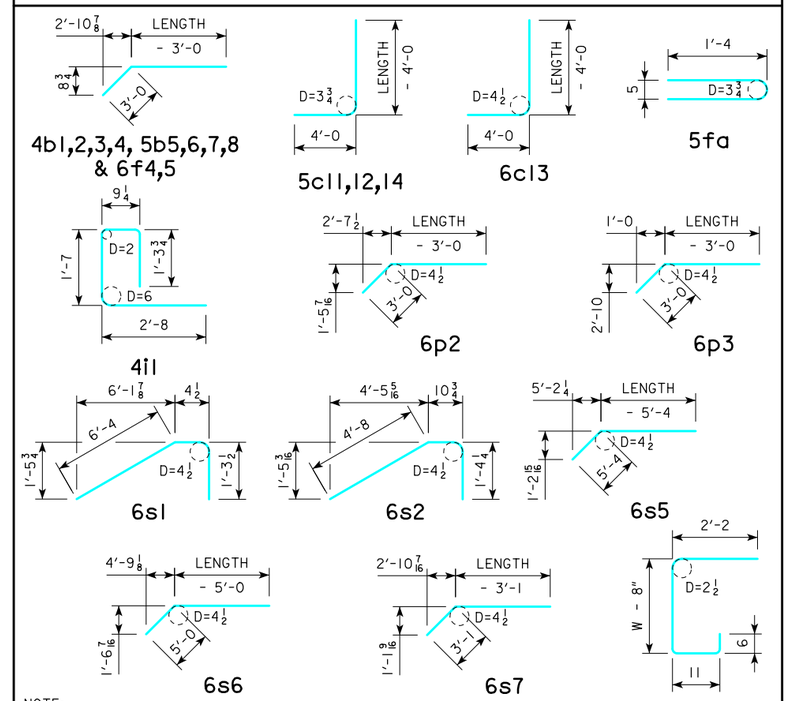

Δ INCLUDES TOP OF WINGWALL QUANTITIES.
* ASSUMES APRON AND FLOOR ARE EQUAL THICKNESS, ADJUST CONCRETE QUANTITIES FOR TRANSITION WHERE APRON AND FLOOR THICKNESS ARE NOT EQUAL.

NOTE:
WEIGHT OF BARS OVER 40′-0 LONG INCLUDES AN ALLOWANCE OF 2′-3 FOR LAP.
LENGTHS SHOWN FOR BARS OVER 40′-0 LONG DO NOT INCLUDE LAP.

"SHORT" DENOTES SHORT WINGWALL
"LONG" DENOTES LONG WINGWALL

HEADWALL NOTES:

1. SEE DRAWING TRRCB GI-12 FOR GENERAL INFORMATION, SPECIFICATIONS, AND DESIGN STRESSES.
2. THIS HEADWALL IS BASED ON A 3:1 SLOPE NORMAL TO CENTERLINE OF ROADWAY.
3. THE SIDES OF THE FOOTING ARE TO BE FORMED TO INSURE CORRECT LINE AND GRADE.
4. ALL SLAB AND FLOOR REINFORCING STEEL IS TO BE SUPPORTED BY BAR CHAIRS AT INTERVALS OF NOT MORE THAN 3′-0 IN EITHER DIRECTION AS OUTLINED IN THE STANDARD SPECIFICATIONS.
5. CLEAR DISTANCE FROM FACE OF CONCRETE TO NEAR REINFORCING BAR IS TO BE 2″ UNLESS OTHERWISE NOTED OR SHOWN. CLEARANCE TO THE BOTTOM ENDS OF VERTICAL BARS SHALL BE 3 INCHES.
6. CONCRETE QUANTITIES ARE ESTIMATED FROM BACK OF PARAPET.
7. HORIZONTAL TAILS OF BARS "b" & "s" ESTIMATED TO EXTEND 2′-0 BEYOND BACK OF PARAPET (INTO END OF BARREL). LONGITUDINAL BARS "d", "6f1", AND "6f3" ESTIMATED TO PROJECT INTO END SECTION OF BARREL A MINIMUM OF 2′-0 BEYOND BACK OF PARAPET.
8. THE "LENGTH" COLUMN REFLECTS TOTAL NUMBER OF FEET NECESSARY TO MEET THESE REQUIREMENTS.

LATEST REVISION DATE

APPROVED BY BRIDGE ENGINEER

IOWA DOT Highway Division

STANDARD DESIGN

TRIPLE REINFORCED CONCRETE BOX CULVERTS

APRIL, 2012

FLARED WING HEADWALLS

30° SKEW

TRH 30-9-12

ENGLISHLRFDSIGNEDTRIPLECULVERTS.DGN - TRH 30-9-12 - THIS SHEET ISSUED 04-12.

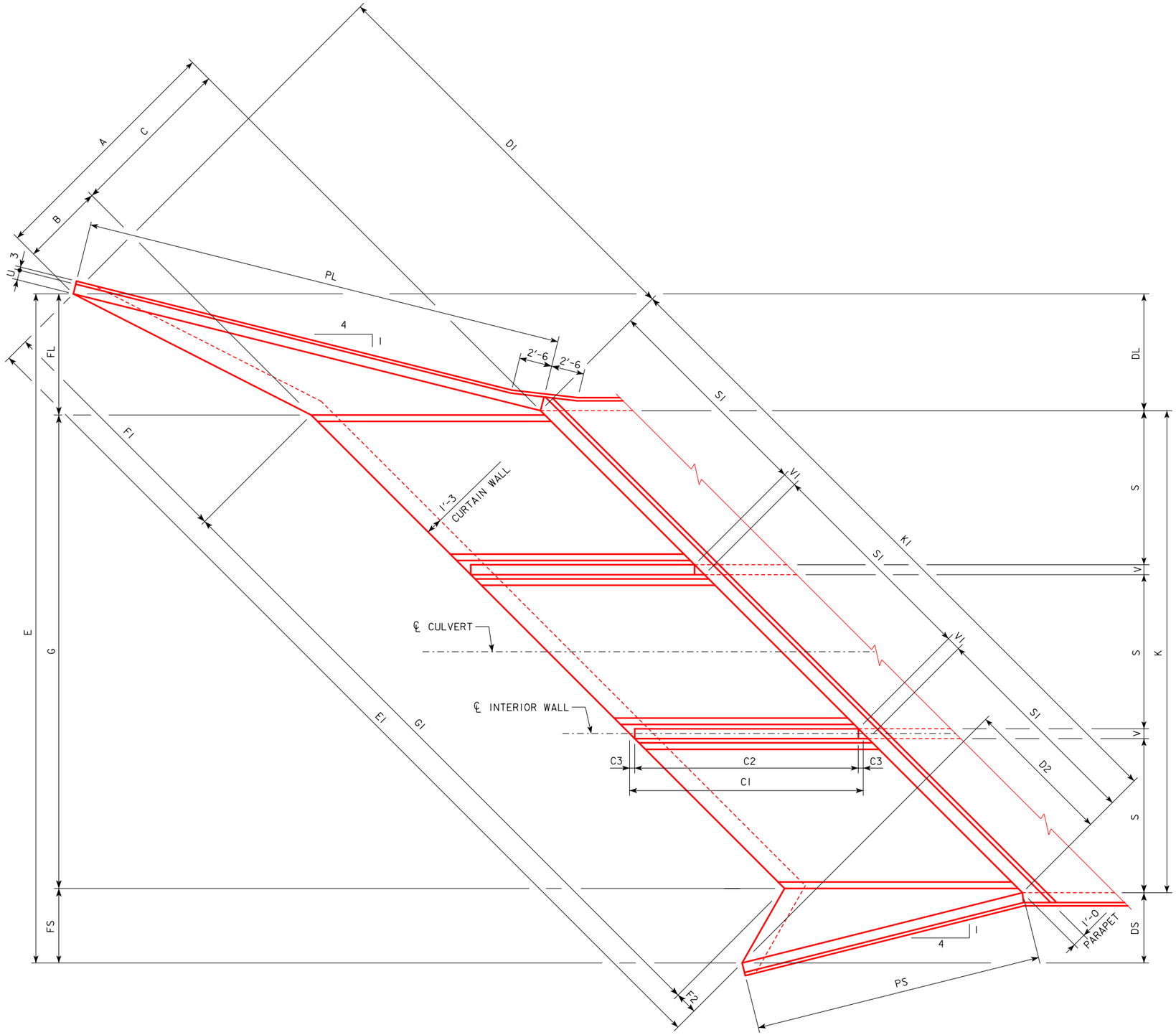

PLAN VIEW

NOTES:

1. SEE SHEET TRRCB G1-12 FOR GENERAL INFORMATION, SPECIFICATIONS, AND DESIGN STRESSES.
2. SEE SHEET TRH 45-2-12 FOR DIMENSION TABLE.
3. SEE SHEET TRH 45-7-12 FOR HEADWALL NOTES.

LATEST REVISION DATE

APPROVED BY BRIDGE ENGINEER

IOWADOT Highway Division

STANDARD DESIGN

TRIPLE REINFORCED CONCRETE BOX CULVERTS

APRIL, 2012

FLARED WING HEADWALLS

45° SKEW

TRH 45-1-12

ENGLISHLRFDSIGNEDTRIPLECULVERTS.DGN - TRH 45-1-12 - THIS SHEET ISSUED 04-12.

DIMENSION TABLE

S X H	12′ X 12′	12′ X 11′	12′ X 10′	12′ X 9′	12′ X 8′	12′ X 7′	12′ X 6′	12′ X 5′	12′ X 4′	10′ X 12′	10′ X 11′	10′ X 10′	10′ X 9′	10′ X 8′	10′ X 7′	10′ X 6′	10′ X 5′	10′ X 4′	S X H
A	37′-0	34′-0	31′-0	28′-0	25′-0	22′-0	19′-0	16′-0	13′-0	37′-0	34′-0	31′-0	28′-0	25′-0	22′-0	19′-0	16′-0	13′-0	A
B	12′-4	11′-4	10′-4	9′-4	8′-4	7′-4	6′-4	5′-4	4′-4	12′-4	11′-4	10′-4	9′-4	8′-4	7′-4	6′-4	5′-4	4′-4	B
C	24′-8	22′-8	20′-8	18′-8	16′-8	14′-8	12′-8	10′-8	8′-8	24′-8	22′-8	20′-8	18′-8	16′-8	14′-8	12′-8	10′-8	8′-8	C
C1	34′-10 5/8	32′-0 5/8	29′-2 3/4	26′-4 3/4	23′-6 7/8	20′-8 7/8	17′-11	15′-1	12′-3 1/8	34′-10 5/8	32′-0 5/8	29′-2 3/4	26′-4 3/4	23′-6 7/8	20′-8 7/8	17′-11	15′-1	12′-3 1/8	C1
C2	33′-10 5/8	31′-1 5/8	28′-4 3/4	25′-6 3/4	22′-8 7/8	19′-11 7/8	17′-2	14′-4	11′-6 1/8	33′-10 5/8	31′-1 5/8	28′-4 3/4	25′-6 3/4	22′-8 7/8	19′-11 7/8	17′-2	14′-4	11′-6 1/8	C2
C3	0′-6	0′-5 1/2	0′-5	0′-5	0′-5	0′-4 1/2	0′-4 1/2	0′-4 1/2	0′-4 1/2	0′-6	0′-5 1/2	0′-5	0′-5	0′-5	0′-4 1/2	0′-4 1/2	0′-4 1/2	0′-4 1/2	C3
DL	17′-5 1/4	16′-0 3/8	14′-7 3/8	13′-2 3/8	11′-9 3/8	10′-4 1/2	8′-11 1/2	7′-6 1/2	6′-1 1/2	17′-5 1/4	16′-0 3/8	14′-7 3/8	13′-2 3/8	11′-9 3/8	10′-4 1/2	8′-11 1/2	7′-6 1/2	6′-1 1/2	DL
DS	10′-5 5/8	9′-7 3/8	8′-9 1/4	7′-11	7′-0 7/8	6′-2 5/8	5′-4 1/2	4′-6 1/4	3′-8 1/8	10′-5 5/8	9′-7 3/8	8′-9 1/4	7′-11	7′-0 7/8	6′-2 5/8	5′-4 1/2	4′-6 1/4	3′-8 1/8	DS
D1	61′-8	56′-8	51′-8	46′-8	41′-8	36′-8	31′-8	26′-8	21′-8	61′-8	56′-8	51′-8	46′-8	41′-8	36′-8	31′-8	26′-8	21′-8	D1
D2	22′-2 3/8	20′-4 3/4	18′-7 1/4	16′-9 5/8	15′-0	13′-2 3/8	11′-4 3/4	9′-7 1/4	7′-9 5/8	22′-2 3/8	20′-4 3/4	18′-7 1/4	16′-9 5/8	15′-0	13′-2 3/8	11′-4 3/4	9′-7 1/4	7′-9 5/8	D2
E	65′-10 7/8	63′-5 3/4	61′-0 5/8	58′-9 3/8	56′-6 1/4	54′-1 1/8	51′-10	49′-6 7/8	47′-3 5/8	59′-10 7/8	57′-5 3/4	55′-0 5/8	52′-9 3/8	50′-6 1/4	48′-1 1/8	45′-10	43′-6 7/8	41′-3 5/8	E
E1	93′-2 1/2	89′-9 1/4	86′-4	83′-1 5/8	79′-11 1/4	76′-6	73′-3 5/8	70′-1 1/4	66′-10 3/4	84′-8 5/8	81′-3 3/8	77′-10 1/4	74′-7 3/4	71′-5 3/8	68′-0 1/8	64′-9 3/4	61′-7 3/8	58′-5	E1
FL	17′-9 1/4	16′-4 3/8	14′-11 3/8	13′-6 3/8	12′-1 3/8	10′-8 1/2	9′-3 1/2	7′-10 1/2	6′-5 1/2	17′-9 1/4	16′-4 3/8	14′-11 3/8	13′-6 3/8	12′-1 3/8	10′-8 1/2	9′-3 1/2	7′-10 1/2	6′-5 1/2	FL
FS	10′-9 5/8	9′-11 3/8	9′-1 1/4	8′-3	7′-4 7/8	6′-6 5/8	5′-8 1/2	4′-10 1/4	4′-0 1/8	10′-9 5/8	9′-11 3/8	9′-1 1/4	8′-3	7′-4 7/8	6′-6 5/8	5′-8 1/2	4′-10 1/4	4′-0 1/8	FS
F1	37′-5 5/8	34′-5 5/8	31′-5 5/8	28′-5 5/8	25′-5 5/8	22′-5 5/8	19′-5 5/8	16′-5 5/8	13′-5 5/8	37′-5 5/8	34′-5 5/8	31′-5 5/8	28′-5 5/8	25′-5 5/8	22′-5 5/8	19′-5 5/8	16′-5 5/8	13′-5 5/8	F1
F2	2′-11 1/4	2′-8 7/8	2′-6 1/2	2′-4	2′-1 5/8	1′-11 1/4	1′-8 7/8	1′-6 1/2	1′-4	2′-11 1/4	2′-8 7/8	2′-6 1/2	2′-4	2′-1 5/8	1′-11 1/4	1′-8 7/8	1′-6 1/2	1′-4	F2
G	37′-4	37′-2	37′-0	37′-0	37′-0	36′-10	36′-10	36′-10	36′-10	31′-4	31′-2	31′-0	31′-0	31′-0	30′-10	30′-10	30′-10	30′-10	G
G1	52′-9 5/8	52′-6 3/4	52′-3 7/8	52′-3 7/8	52′-3 7/8	52′-1 1/8	52′-1 1/8	52′-1 1/8	52′-1 1/8	44′-3 3/4	44′-0 7/8	43′-10 1/8	43′-10 1/8	43′-10 1/8	43′-7 1/4	43′-7 1/4	43′-7 1/4	43′-7 1/4	G1
G2	53′-11 7/8	53′-9	53′-6 1/8	53′-6	53′-6	53′-3	53′-2 7/8	53′-2 3/4	53′-2 1/2	45′-6	45′-3 1/8	45′-0 1/4	45′-0 1/4	45′-0 1/8	44′-9 1/4	44′-9 1/8	44′-8 7/8	44′-8 5/8	G2
G3	39′-5 3/8	36′-3 1/2	33′-1 1/2	29′-11 1/2	26′-9 5/8	23′-7 5/8	20′-5 3/4	17′-3 3/4	14′-1 7/8	39′-5 3/8	36′-3 1/2	33′-1 1/2	29′-11 1/2	26′-9 5/8	23′-7 5/8	20′-5 3/4	17′-3 3/4	14′-1 7/8	G3
G4	39′-9 1/2	36′-3	32′-8 1/2	29′-6 5/8	26′-4 5/8	22′-10 1/4	19′-8 3/8	16′-6 1/2	13′-4 3/4	39′-9 1/2	36′-3	32′-8 1/2	29′-6 5/8	26′-4 5/8	22′-10 1/4	19′-8 3/8	16′-6 1/2	13′-4 3/4	G4
G5	12′-8 1/8	11′-7 7/8	10′-7 5/8	9′-7 1/2	8′-7 1/4	7′-7	6′-6 3/4	5′-6 5/8	4′-6 3/8	12′-8 1/8	11′-7 7/8	10′-7 5/8	9′-7 1/2	8′-7 1/4	7′-7	6′-6 3/4	5′-6 5/8	4′-6 3/8	G5
G6	14′-2 1/8	13′-0 1/2	11′-10 3/4	10′-10 1/2	9′-10 3/8	8′-8 3/4	7′-8 1/2	6′-8 3/8	5′-8 1/8	14′-2 1/8	13′-0 1/2	11′-10 3/4	10′-10 1/2	9′-10 3/8	8′-8 3/4	7′-8 1/2	6′-8 3/8	5′-8 1/8	G6
G7	0′-1 5/8	0′-6 1/8	0′-10 1/2	0′-10 1/2	0′-10 1/2	1′-2 3/4	1′-2 3/4	1′-2 5/8	1′-2 5/8	0′-1 5/8	0′-6 1/8	0′-10 1/2	0′-10 1/2	0′-10 1/2	1′-2 3/4	1′-2 3/4	1′-2 5/8	1′-2 5/8	G7
G8	0′-6 1/8	0′-7 1/8	0′-8 1/4	0′-8 1/4	0′-8 1/4	0′-9 1/4	0′-9 1/4	0′-9 3/8	0′-9 3/8	0′-6 1/8	0′-7 1/8	0′-8 1/4	0′-8 1/4	0′-8 1/4	0′-9 1/4	0′-9 1/4	0′-9 3/8	0′-9 3/8	G8
K	38′-0	37′-10	37′-8	37′-8	37′-8	37′-6	37′-6	37′-6	37′-6	32′-0	31′-10	31′-8	31′-8	31′-8	31′-6	31′-6	31′-6	31′-6	K
K1	53′-8 7/8	53′-6	53′-3 1/4	53′-3 1/4	53′-3 1/4	53′-0 3/8	53′-0 3/8	53′-0 3/8	53′-0 3/8	45′-3	45′-0 1/4	44′-9 3/8	44′-9 3/8	44′-9 3/8	44′-6 5/8	44′-6 5/8	44′-6 5/8	44′-6 5/8	K1
PL	71′-11	66′-1	60′-3	54′-5 5/8	48′-7 1/8	42′-9 1/8	36′-11 1/8	31′-1 1/8	25′-3 1/4	71′-11	66′-1	60′-3	54′-5 1/8	48′-7 1/8	42′-9 1/8	36′-11 1/8	31′-1 1/8	25′-3 1/4	PL
PS	43′-1 3/4	39′-7 3/4	36′-1 7/8	32′-7 7/8	29′-1 7/8	25′-7 7/8	22′-1 7/8	18′-7 7/8	15′-1 7/8	43′-1 3/4	39′-7 3/4	36′-1 7/8	32′-7 7/8	29′-1 7/8	25′-7 7/8	22′-1 7/8	18′-7 7/8	15′-1 7/8	PS
RL	72′-11 5/8	67′-0 5/8	61′-1 5/8	55′-2 5/8	49′-3 5/8	43′-4 5/8	37′-5 5/8	31′-6 5/8	25′-7 5/8	72′-11 5/8	67′-0 5/8	61′-1 5/8	55′-2 5/8	49′-3 5/8	43′-4 5/8	37′-5 5/8	31′-6 5/8	25′-7 5/8	RL
RS	44′-10 1/2	41′-2 7/8	37′-7 1/4	33′-11 1/2	30′-3 7/8	26′-8 1/4	23′-0 1/2	19′-4 7/8	15′-9 1/4	44′-10 1/2	41′-2 7/8	37′-7 1/4	33′-11 1/2	30′-3 7/8	26′-8 1/4	23′-0 1/2	19′-4 7/8	15′-9 1/4	RS
R1	35′-7 1/2	32′-8 1/2	29′-9 3/8	26′-9 1/2	23′-9 1/2	20′-10 1/2	17′-10 1/2	14′-10 5/8	11′-10 3/4	35′-7 1/2	32′-8 1/2	29′-9 3/8	26′-9 1/2	23′-9 1/2	20′-10 1/2	17′-10 1/2	14′-10 5/8	11′-10 3/4	R1
S1	16′-11 5/8	16′-11 5/8	16′-11 5/8	16′-11 5/8	16′-11 5/8	16′-11 5/8	16′-11 5/8	16′-11 5/8	16′-11 5/8	14′-1 3/4	14′-1 3/4	14′-1 3/4	14′-1 3/4	14′-1 3/4	14′-1 3/4	14′-1 3/4	14′-1 3/4	14′-1 3/4	S1
T	1′-2	1′-2	1′-2	1′-2	1′-2	1′-2	1′-2	1′-2	1′-2	1′-1	1′-1	1′-1	1′-1	1′-1	1′-1	1′-1	1′-1	1′-1	T
U	1′-0	0′-11	0′-10	0′-10	0′-10	0′-9	0′-9	0′-9	0′-9	1′-0	0′-11	0′-10	0′-10	0′-10	0′-9	0′-9	0′-9	0′-9	U
V	1′-0	0′-11	0′-10	0′-10	0′-10	0′-9	0′-9	0′-9	0′-9	1′-0	0′-11	0′-10	0′-10	0′-10	0′-9	0′-9	0′-9	0′-9	V
V1	1′-5	1′-3 1/2	1′-2 1/8	1′-2 1/8	1′-2 1/8	1′-0 3/4	1′-0 3/4	1′-0 3/4	1′-0 3/4	1′-5	1′-3 1/2	1′-2 1/8	1′-2 1/8	1′-2 1/8	1′-0 3/4	1′-0 3/4	1′-0 3/4	1′-0 3/4	V1
W	5′-0	4′-9	4′-6	4′-3	4′-0	3′-9	3′-6	3′-6	3′-6	5′-0	4′-9	4′-6	4′-3	4′-0	3′-9	3′-6	3′-6	3′-6	W

NOTES:

1. SEE SHEET TRRCB G1-12 FOR GENERAL INFORMATION, SPECIFICATIONS, AND DESIGN STRESSES.
2. SEE SHEETS TRH 45-1-12 AND TRH 45-3-12 THRU TRH 45-6-12 FOR LOCATION OF CERTAIN DIMENSIONS TABULATED.
3. SEE SHEET TRH 45-7-12 FOR HEADWALL NOTES.

LATEST REVISION DATE

APPROVED BY BRIDGE ENGINEER

IOWA DOT Highway Division

STANDARD DESIGN

TRIPLE REINFORCED CONCRETE BOX CULVERTS

APRIL, 2012

FLARED WING HEADWALLS

45° SKEW

TRH 45-2-12

ENGLISHLRFDSIGNEDTRIPLECULVERTS.DGN - TRH 45-2-12 - THIS SHEET ISSUED 04-12.

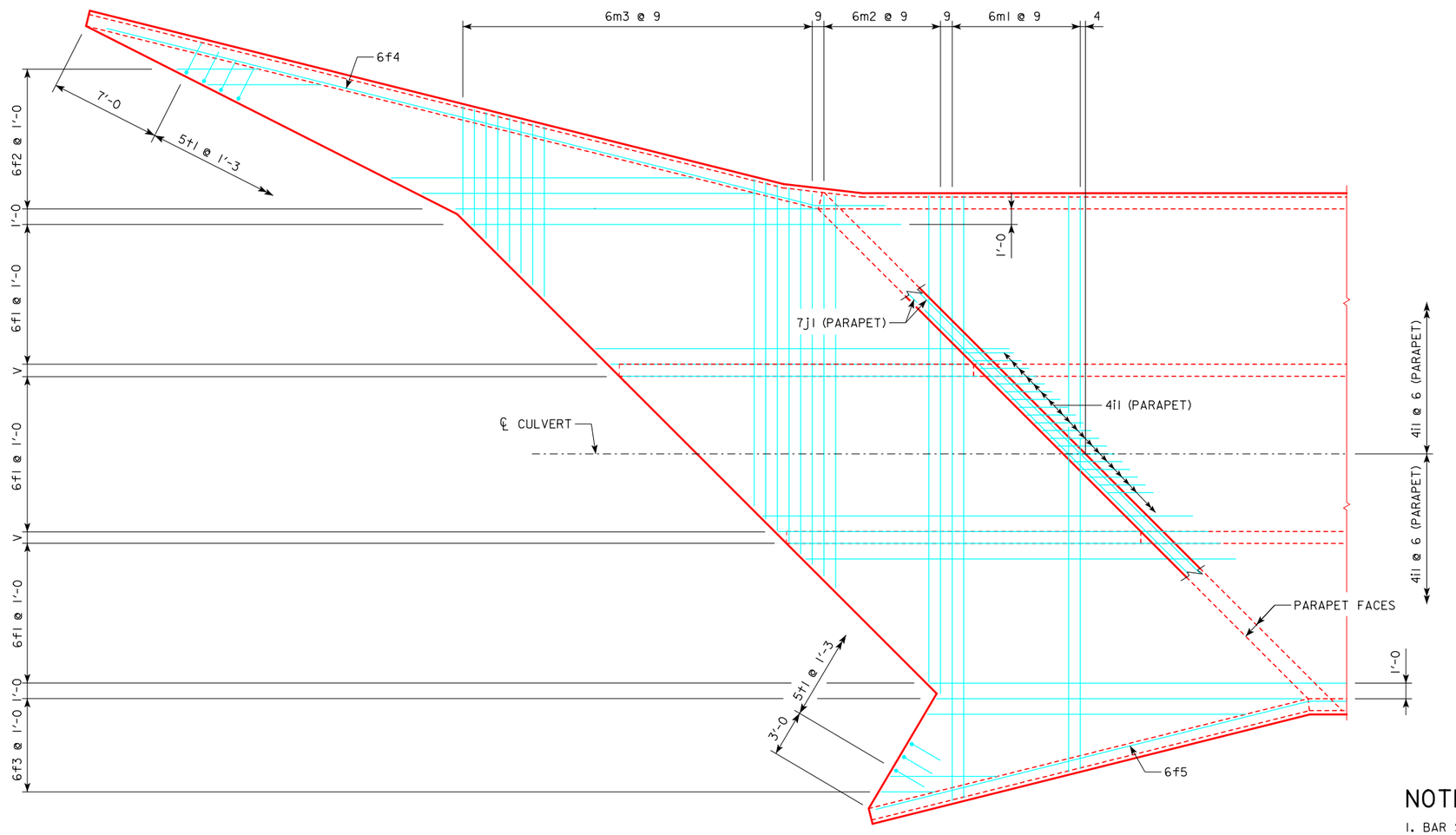

PLAN VIEW - TOP OF APRON REINFORCING BARS

NOTES:

1. BAR SPACING AND POSITIONS SHOWN ARE SIMILAR FOR ALL SIZES OF HEADWALLS IN THIS STANDARD.
2. TOP TRANSVERSE FLOOR BARS ARE REFERENCED APPROXIMATELY 4" FROM THE BACK OF THE PARAPET FOR ALL HEADWALLS.
3. FOR DIMENSION TABLE SEE SHEET TRH 45-2-12.
4. FOR REINFORCING IN CURTAIN WALL SEE CURTAIN WALL DETAILS ON SHEET TRH 45-5-12.

LATEST REVISION DATE

APPROVED BY BRIDGE ENGINEER

IOWA DOT Highway Division

STANDARD DESIGN

TRIPLE REINFORCED CONCRETE BOX CULVERTS

APRIL, 2012

FLARED WING HEADWALLS

45° SKEW

TRH 45-3-12

ENGLISHLRFDSIGNEDTRIPLECULVERTS.DGN - TRH 45-3-12 - THIS SHEET ISSUED 04-12.

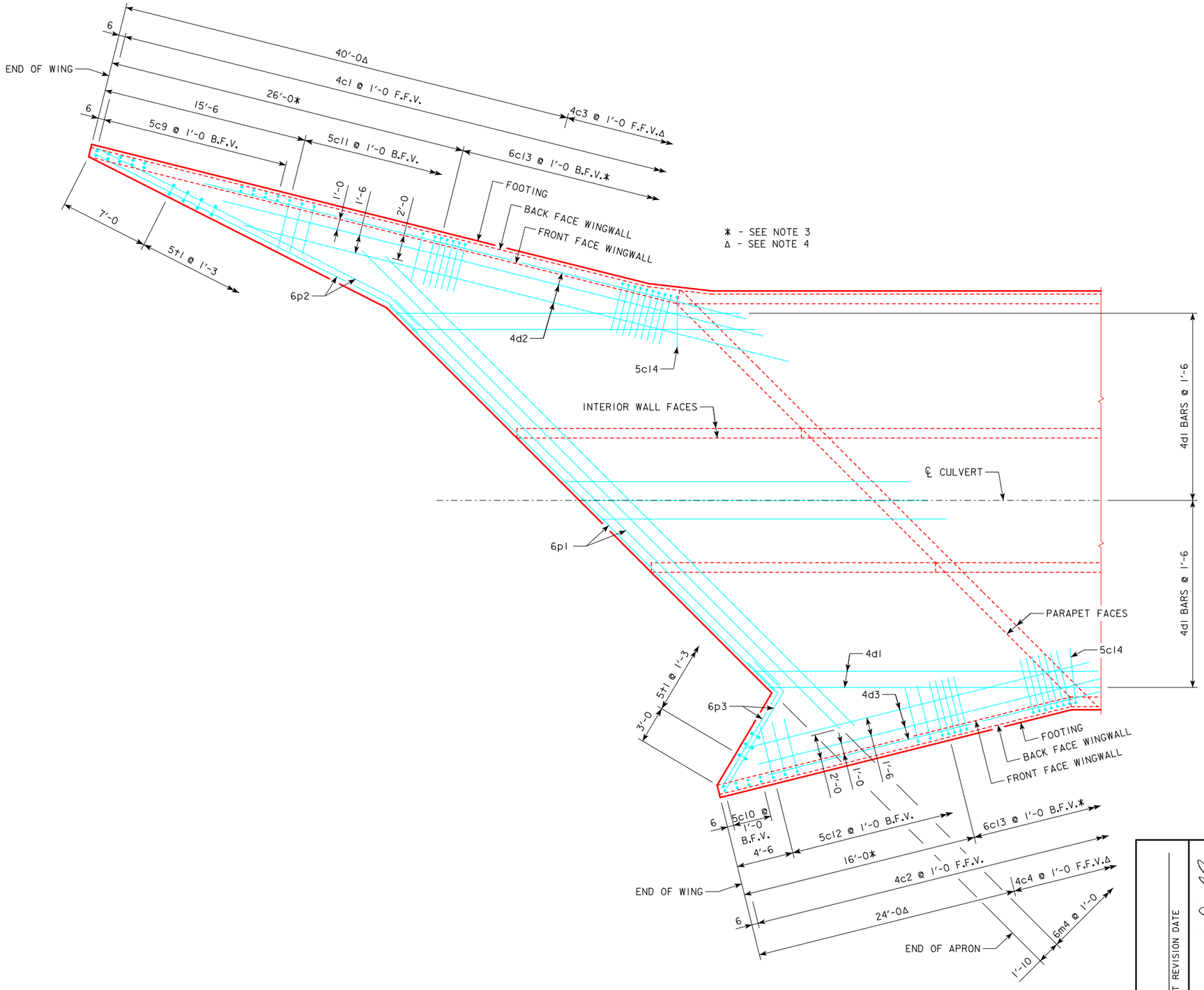

* - SEE NOTE 3
Δ - SEE NOTE 4

NOTES:

1. BAR SPACINGS AND POSITIONS SHOWN ARE SIMILAR FOR ALL SIZES OF HEADWALLS IN THIS STANDARD.
2. WINGWALL BARS CONSISTENTLY REFERENCED FROM END OF WING FOR ALL HEADWALLS.
3. THERE ARE NO 6c13 BARS IN THE 4' & 5' HEIGHT HEADWALLS.
4. 4c3 & 4c4 BARS USED ONLY IN THE 9', 10', 11' & 12' HEIGHT HEADWALLS.
5. FOR DIMENSION TABLE SEE SHEET TRH 45-2-12.
6. FOR REINFORCING IN CURTAIN WALL SEE CURTAIN WALL DETAILS ON SHEET TRH 45-5-12.

PLAN VIEW - BOTTOM OF APRON REINFORCING BARS

LATEST REVISION DATE

APPROVED BY BRIDGE ENGINEER

IOWA DOT Highway Division

STANDARD DESIGN

TRIPLE REINFORCED CONCRETE BOX CULVERTS

APRIL, 2012

FLARED WING HEADWALLS

45° SKEW

TRH 45-4-12

ENGLISHLRFDSIGNEDTRIPLECULVERTS.DGN - TRH 45-4-12 - THIS SHEET ISSUED 04-12.

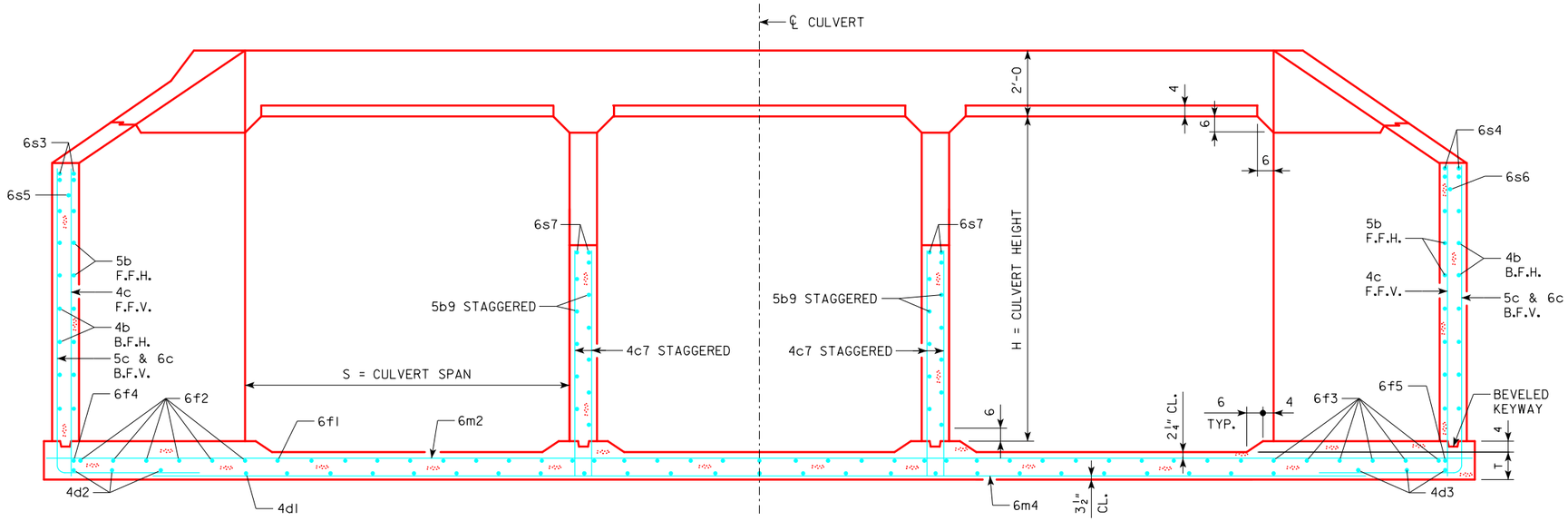

TYPICAL SECTION - NEAR CENTER OF APRON

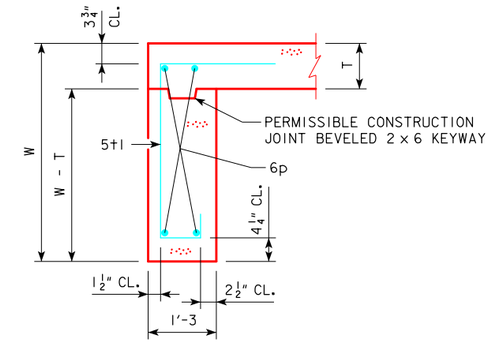

SECTION THRU CURTAIN WALL

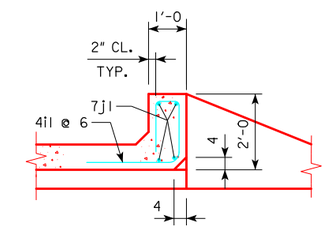

SECTION THRU PARAPET

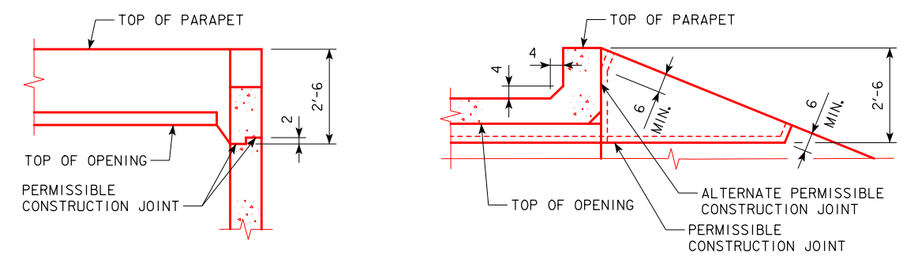

TOP OF WINGWALL DETAILS

CULVERT HEIGHT (H)	ANGLE	
	∡L	∡S
4'	27°10'	62°06'
5'	27°03'	61°07'
6'	26°59'	60°22'
7'	26°55'	59°48'
8'	26°53'	59°22'
9'	26°51'	59°02'
10'	26°49'	58°49'
11'	26°48'	58°35'
12'	26°47'	58°24'

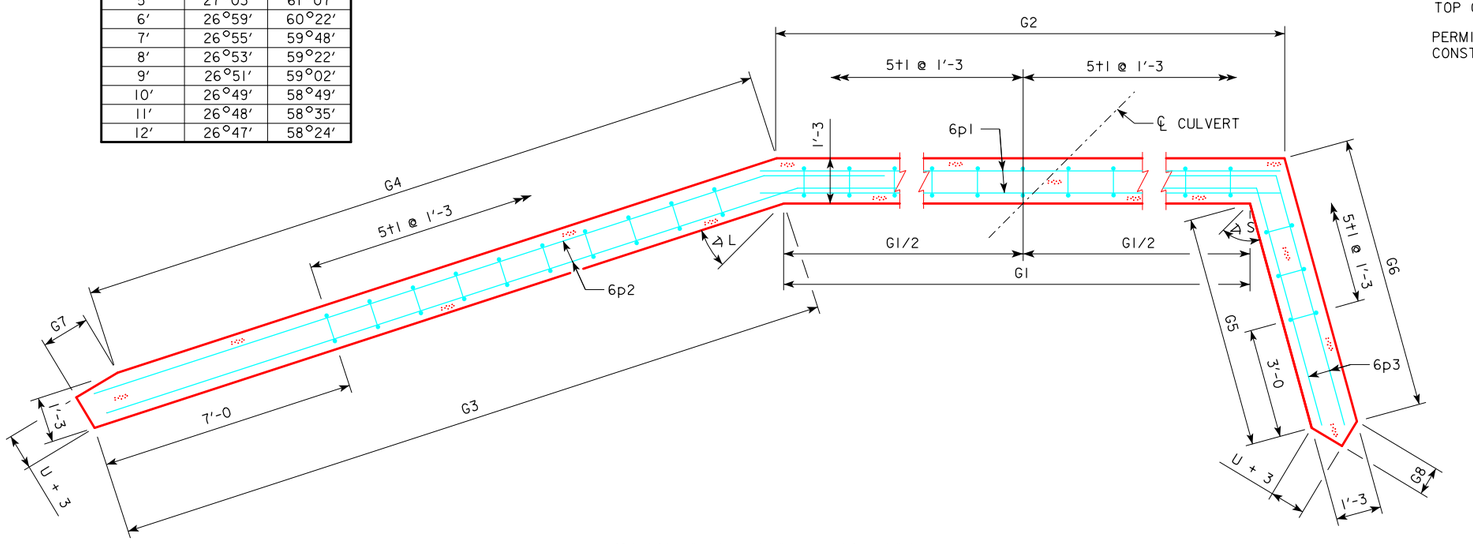

CURTAIN WALL PLAN

NOTES:

1. SEE SHEET TRRCB G1-12 FOR GENERAL INFORMATION, SPECIFICATIONS, AND DESIGN STRESSES.
2. FOR DIMENSION TABLE SEE SHEET TRH 45-2-12.

LATEST REVISION DATE

APPROVED BY BRIDGE ENGINEER

IOWADOT Highway Division

STANDARD DESIGN

TRIPLE REINFORCED CONCRETE BOX CULVERTS

APRIL, 2012

FLARED WING HEADWALLS

45° SKEW

TRH 45-5-12

ENGLISHLRFDSIGNEDTRIPLECULVERTS.DGN - TRH 45-5-12 - THIS SHEET ISSUED 04-12.

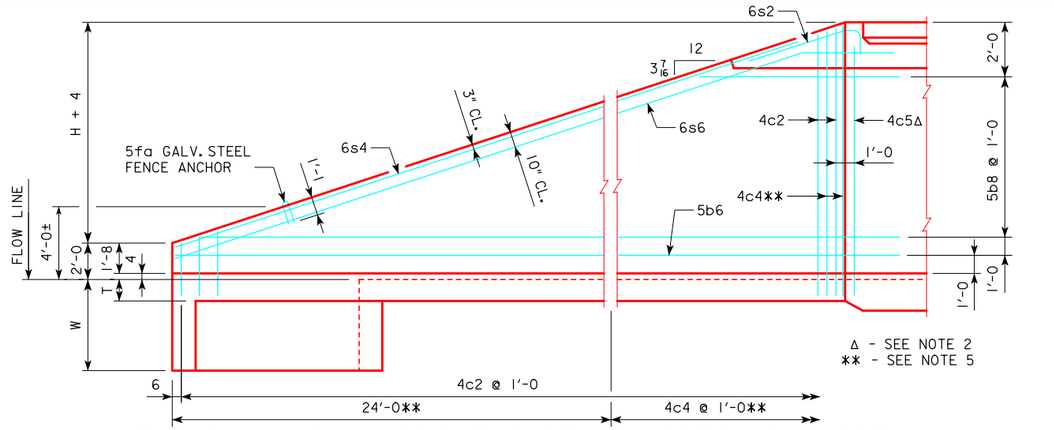

TYPICAL VIEW - FRONT FACE REINFORCING SHORT WINGWALL

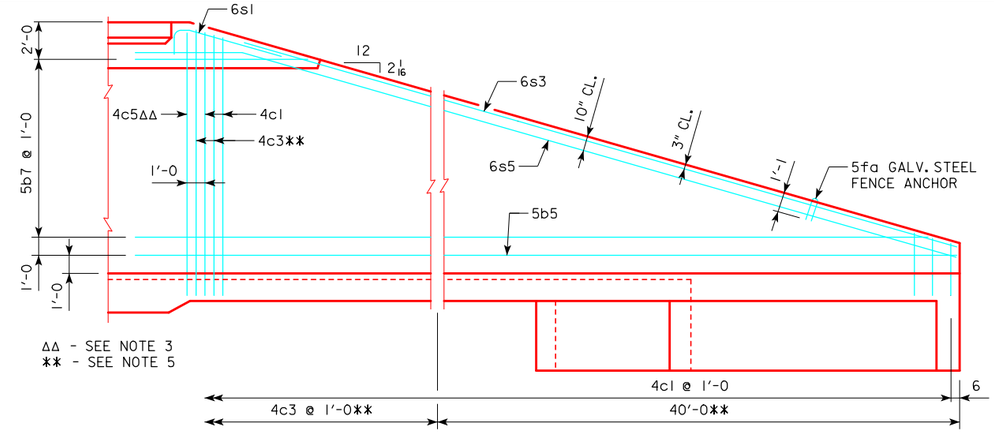

TYPICAL VIEW - FRONT FACE REINFORCING LONG WINGWALL

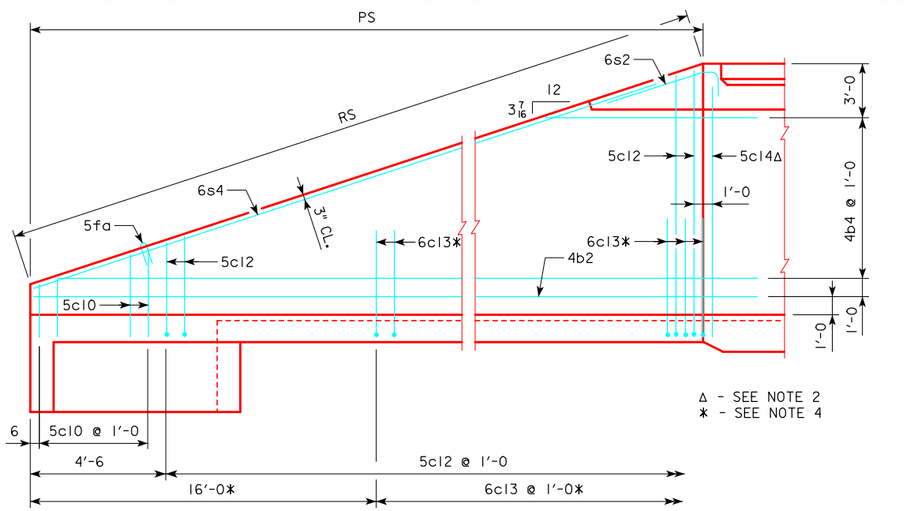

TYPICAL VIEW - BACK FACE REINFORCING SHORT WINGWALL

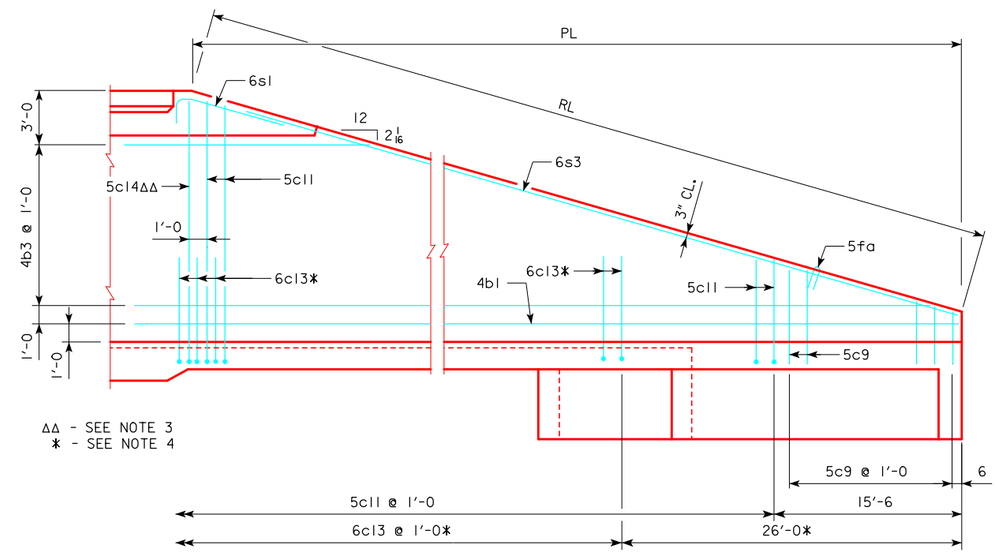

TYPICAL VIEW - BACK FACE REINFORCING LONG WINGWALL

CULVERT HEIGHT (H)	SLOPE y INCHES
4'	3 1/8
5'	3 3/8
6'	3 1/2
7'	3 5/8
8'	3 11/16
9'	3 3/4
10'	3 13/16
11'	3 7/8
12'	3 7/8

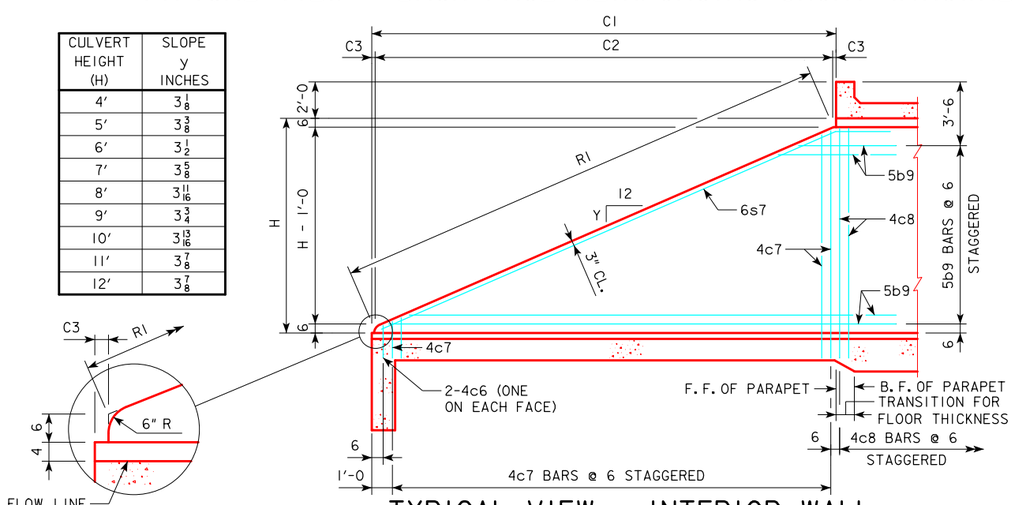

TYPICAL VIEW - INTERIOR WALL

NOTES:

1. BAR SPACINGS AND POSITIONS SHOWN ARE SIMILAR FOR ALL SIZES OF HEADWALLS IN THIS STANDARD.
2. TWO 4c5 & TWO 5c14 BARS FOR 4', 6', 8', 10' & 12' HEIGHT HEADWALLS. ONE 4c5 & ONE 5c14 BAR FOR 5', 7', 9' & 11' HEIGHT HEADWALLS.
3. TWO 4c5 & TWO 5c14 BARS FOR 4', 5', 9', 10' & 11' HEIGHT HEADWALLS. ONE 4c5 & ONE 5c14 BAR FOR 6', 7', 8' & 12' HEIGHT HEADWALLS.
4. NOT APPLICABLE FOR 4' & 5' HEADWALLS.
5. NOT APPLICABLE FOR 4' THRU 8' HEIGHT HEADWALLS.
6. FOR DIMENSION TABLE SEE SHEET TRH 45-2-12.

07-2016
LATEST REVISION DATE

APPROVED BY BRIDGE ENGINEER

IOWA DOT Highway Division

STANDARD DESIGN

TRIPLE REINFORCED CONCRETE BOX CULVERTS

APRIL, 2012

FLARED WING HEADWALLS

45° SKEW

TRH 45-6-12

REVISED 05-13 - CHANGED DIMENSIONS WHEN TO BEGIN PLACING BARS 4c3, 4c4, 5c11, 5c12, & 6c13 IN WINGWALLS.
REVISED 07-2016 - REMOVED 1'-8 VERTICAL DIMENSION FROM 6s5 & 6s6 BARS TO TOP OF PARAPET. THIS ALLOWS FOR THE VARIABLE VERTICAL LOCATION OF THE HORIZONTAL LEG IN THE SLAB. THIS VARIANCE IN LOCATION IS CAUSED BY THE DIFFERING WING SIZES OF DIFFERENT SIZED R.C.B. CULVERTS.
ENGLISHLRFDSIGNEDTRIPLECULVERTS.DGN - TRH 45-6-12 - THIS SHEET ISSUED 04-12.

BILL OF REINFORCING FOR ONE HEADWALL 45° SKEW CULVERT SPAN x CULVERT HEIGHT

BAR	LOCATION	SHAPE	12' x 12' NO.	12' x 12' LENGTH	12' x 12' WT.	12' x 11' NO.	12' x 11' LENGTH	12' x 11' WT.	12' x 10' NO.	12' x 10' LENGTH	12' x 10' WT.	12' x 9' NO.	12' x 9' LENGTH	12' x 9' WT.	12' x 8' NO.	12' x 8' LENGTH	12' x 8' WT.	12' x 7' NO.	12' x 7' LENGTH	12' x 7' WT.	12' x 6' NO.	12' x 6' LENGTH	12' x 6' WT.	BAR
5fa	FENCE ANCHOR (GALV.)		2	2'-10	6	2	2'-10	6	2	2'-10	6	2	2'-10	6	2	2'-10	6	2	2'-10	6	2	2'-10	6	5fa
4b1	WINGWALL, B.F.H. LONG		1	74'-8	51	1	68'-10	47	1	63'-0	44	1	57'-2	40	1	51'-4	36	1	45'-6	32	1	39'-8	26	4b1
4b2	WINGWALL, B.F.H. SHORT		1	45'-10	32	1	42'-4	30	1	38'-10	26	1	35'-5	24	1	31'-11	21	1	28'-5	19	1	24'-11	17	4b2
4b3	WINGWALL, B.F.H. LONG		10 VAR.	19'-6 TO 71'-10	314	9 VAR.	19'-6 TO 66'-1	265	8 VAR.	19'-6 TO 60'-3	219	7 VAR.	19'-6 TO 54'-5	177	6 VAR.	19'-6 TO 48'-7	139	5 VAR.	19'-6 TO 42'-9	105	4 VAR.	19'-5 TO 36'-11	75	4b3
4b4	WINGWALL, B.F.H. SHORT		10 VAR.	12'-10 TO 44'-3	194	9 VAR.	12'-10 TO 40'-9	163	8 VAR.	12'-10 TO 37'-3	134	7 VAR.	12'-10 TO 33'-9	109	6 VAR.	12'-10 TO 30'-3	86	5 VAR.	12'-10 TO 26'-9	66	4 VAR.	12'-10 TO 23'-3	48	4b4
5b5	WINGWALL, F.F.H. LONG		1	74'-8	80	1	68'-10	74	1	63'-0	68	1	57'-2	62	1	51'-4	56	1	45'-6	50	1	39'-9	41	5b5
5b6	WINGWALL, F.F.H. SHORT		1	45'-11	50	1	42'-5	47	1	38'-11	41	1	35'-5	37	1	31'-11	33	1	28'-5	30	1	24'-11	26	5b6
5b7	WINGWALL, F.F.H. LONG		11 VAR.	13'-9 TO 71'-11	506	10 VAR.	13'-9 TO 66'-1	428	9 VAR.	13'-9 TO 60'-3	357	8 VAR.	13'-9 TO 54'-5	291	7 VAR.	13'-8 TO 48'-7	232	6 VAR.	13'-8 TO 42'-9	179	5 VAR.	13'-8 TO 36'-11	132	5b7
5b8	WINGWALL, F.F.H. SHORT		11 VAR.	9'-5 TO 44'-4	313	10 VAR.	9'-5 TO 40'-10	264	9 VAR.	9'-5 TO 37'-4	219	8 VAR.	9'-5 TO 33'-10	180	7 VAR.	9'-5 TO 30'-4	145	6 VAR.	9'-4 TO 26'-10	113	5 VAR.	9'-4 TO 23'-4	85	5b8
5b9	INTERIOR WALLS, BOTH F.H.		42 VAR.	2 EA. 6'-6 TO 37'-4	960	38 VAR.	2 EA. 6'-6 TO 34'-6	812	34 VAR.	2 EA. 6'-6 TO 31'-9	678	30 VAR.	2 EA. 6'-6 TO 28'-11	554	26 VAR.	2 EA. 6'-7 TO 26'-1	443	22 VAR.	2 EA. 6'-7 TO 23'-3	342	18 VAR.	2 EA. 6'-8 TO 20'-5	254	5b9
4c1	WINGWALL, F.F.V. LONG		72 VAR.	2'-9 TO 15'-0	427	66 VAR.	2'-9 TO 13'-11	367	60 VAR.	2'-9 TO 12'-11	314	54 VAR.	2'-9 TO 11'-11	265	49 VAR.	2'-9 TO 11'-0	225	43 VAR.	2'-9 TO 10'-0	183	37 VAR.	2'-9 TO 9'-0	145	4c1
4c2	WINGWALL, F.F.V. SHORT		43 VAR.	2'-10 TO 14'-10	254	40 VAR.	2'-10 TO 14'-0	225	36 VAR.	2'-10 TO 12'-10	188	33 VAR.	2'-10 TO 12'-0	163	29 VAR.	2'-10 TO 10'-10	132	26 VAR.	2'-10 TO 10'-0	111	22 VAR.	2'-10 TO 8'-10	86	4c2
4c3	WINGWALL, F.F.V. LONG		33 VAR.	6'-10 TO 12'-4	211	27 VAR.	6'-10 TO 11'-3	163	21 VAR.	6'-10 TO 10'-3	120	15 VAR.	6'-10 TO 9'-3	81	---	---	---	---	---	---	---	---	---	4c3
4c4	WINGWALL, F.F.V. SHORT		20 VAR.	8'-8 TO 14'-2	153	17 VAR.	8'-8 TO 13'-3	124	13 VAR.	8'-8 TO 12'-2	90	10 VAR.	8'-8 TO 11'-3	67	---	---	---	---	---	---	---	---	---	4c4
4c5	WINGWALL, F.F.V. LONG		1	13'-9	9	2	12'-9	17	2	11'-9	16	2	10'-9	14	1	9'-9	7	1	8'-9	6	1	7'-9	5	4c5
4c5	WINGWALL, F.F.V. SHORT		2	13'-9	18	1	12'-9	9	2	11'-9	16	1	10'-9	7	2	9'-9	13	1	8'-9	6	2	7'-9	10	4c5
4c6	INTERIOR WALLS, BOTH F.V.		4	1'-8	4	4	1'-8	4	4	1'-8	4	4	1'-8	4	4	1'-8	4	4	1'-8	4	4	1'-8	4	4c6
4c7	INTERIOR WALLS, BOTH F.V.		132 VAR.	2 EA. 1'-10 TO 12'-5	628	122 VAR.	2 EA. 1'-10 TO 11'-6	543	110 VAR.	2 EA. 1'-10 TO 10'-5	450	100 VAR.	2 EA. 1'-10 TO 9'-6	379	88 VAR.	2 EA. 1'-10 TO 8'-6	304	76 VAR.	2 EA. 1'-10 TO 7'-5	235	66 VAR.	2 EA. 1'-10 TO 6'-6	184	4c7
4c8	INTERIOR WALLS, BOTH F.V.		6	12'-7	50	6	11'-7	46	6	10'-7	42	6	9'-7	38	6	8'-7	34	6	7'-7	30	6	6'-7	26	4c8
5c9	WINGWALL, B.F.V. LONG		15 VAR.	2'-9 TO 5'-2	62	15 VAR.	2'-9 TO 5'-2	62	15 VAR.	2'-9 TO 5'-2	62	15 VAR.	2'-9 TO 5'-2	62	15 VAR.	2'-9 TO 5'-2	62	15 VAR.	2'-9 TO 5'-2	62	15 VAR.	2'-9 TO 5'-2	62	5c9
5c10	WINGWALL, B.F.V. SHORT		4 VAR.	2'-10 TO 3'-8	14	4 VAR.	2'-10 TO 3'-8	14	4 VAR.	2'-10 TO 3'-8	14	4 VAR.	2'-10 TO 3'-8	14	4 VAR.	2'-10 TO 3'-8	14	4 VAR.	2'-10 TO 3'-8	14	4 VAR.	2'-10 TO 3'-8	14	5c10
5c11	WINGWALL, B.F.V. LONG		57 VAR.	9'-4 TO 19'-0	842	51 VAR.	9'-4 TO 17'-11	725	45 VAR.	9'-4 TO 16'-11	616	39 VAR.	9'-4 TO 15'-11	514	34 VAR.	9'-4 TO 15'-0	431	28 VAR.	9'-4 TO 14'-0	341	22 VAR.	9'-4 TO 13'-0	256	5c11
5c12	WINGWALL, B.F.V. SHORT		39 VAR.	8'-0 TO 18'-10	546	36 VAR.	8'-0 TO 18'-0	488	32 VAR.	8'-0 TO 16'-10	414	29 VAR.	8'-0 TO 16'-0	363	25 VAR.	8'-0 TO 14'-10	298	22 VAR.	8'-0 TO 14'-0	252	18 VAR.	8'-0 TO 12'-10	196	5c12
6c13	WINGWALL, B.F.V. LONG		47	10'-6	741	41	10'-6	647	35	10'-6	552	29	10'-6	457	24	10'-6	379	18	10'-6	284	12	10'-6	189	6c13
6c13	WINGWALL, B.F.V. SHORT		28	10'-6	442	25	10'-6	394	21	10'-6	331	18	10'-6	284	14	10'-6	221	11	10'-6	173	7	10'-6	110	6c13
5c14	WINGWALL, B.F.V. LONG		1	17'-9	19	2	16'-9	35	2	15'-9	33	2	14'-9	31	1	13'-9	14	1	12'-9	13	1	11'-9	12	5c14
5c14	WINGWALL, B.F.V. SHORT		2	17'-9	37	1	16'-9	17	2	15'-9	33	1	14'-9	15	2	13'-9	29	1	12'-9	13	2	11'-9	25	5c14
4d1	APRON, LONGIT., BOTT.		25	38'-1	636	25	35'-3	589	25	32'-5	541	25	29'-7	494	25	26'-9	447	25	24'-0	401	25	21'-2	353	4d1
4d2	APRON, LONGIT., BOTT. LONG		3	68'-5	142	3	62'-7	130	3	56'-8	118	3	50'-10	106	3	45'-0	95	3	39'-3	79	3	33'-6	67	4d2
4d3	APRON, LONGIT., BOTT. SHORT		3	42'-2	89	3	38'-8	77	3	35'-1	70	3	31'-7	63	3	28'-2	56	3	24'-8	49	3	21'-3	43	4d3
6f1	APRON, LONGIT., TOP		37	38'-1	2116	37	35'-3	1959	37	32'-5	1802	37	29'-7	1644	37	26'-9	1487	37	24'-0	1334	37	21'-2	1176	6f1
6f2	APRON, LONGIT., TOP LONG		15 VAR.	6'-6 TO 34'-10	466	14 VAR.	5'-8 TO 32'-0	396	12 VAR.	6'-11 TO 29'-2	325	11 VAR.	6'-1 TO 26'-4	268	9 VAR.	7'-3 TO 23'-6	208	8 VAR.	6'-5 TO 20'-8	163	7 VAR.	5'-7 TO 17'-10	123	6f2
6f3	APRON, LONGIT., TOP SHORT		9 VAR.	8'-1 TO 35'-2	292	8 VAR.	8'-8 TO 32'-4	246	8 VAR.	5'-9 TO 29'-6	212	7 VAR.	6'-4 TO 26'-8	173	6 VAR.	6'-10 TO 23'-10	138	5 VAR.	7'-4 TO 21'-0	106	4 VAR.	7'-11 TO 18'-2	78	6f3
6f4	APRON, LONGIT., TOP LONG		1	74'-8	116	1	68'-10	107	1	63'-0	98	1	57'-2	89	1	51'-4	80	1	45'-6	72	1	39'-9	60	6f4
6f5	APRON, LONGIT., TOP SHORT		1	45'-11	72	1	42'-5	67	1	38'-11	58	1	35'-5	53	1	31'-11	48	1	28'-5	43	1	24'-11	37	6f5
4i1	PARAPET, VERTICAL		77	6'-8	343	75	6'-8	334	75	6'-8	334	75	6'-8	334	75	6'-8	334	75	6'-8	334	75	6'-8	334	4i1
7ji	PARAPET, HORIZONTAL		4	56'-1	477	4	55'-7	473	4	55'-1	469	4	55'-1	469	4	55'-1	469	4	54'-8	465	4	54'-8	465	7ji
6m1	APRON, TRANS., TOP		23 VAR.	44'-8 TO 48'-9	1691	20 VAR.	44'-3 TO 47'-10	1451	16 VAR.	43'-11 TO 46'-9	1144	12 VAR.	43'-11 TO 46'-0	851	9 VAR.	43'-11 TO 45'-5	634	5 VAR.	43'-7 TO 44'-4	347	1 VAR.	43'-7 TO 43'-7	69	6m1
6m2	APRON, TRANS., TOP		4 VAR.	36'-3 TO 38'-6	225	7 VAR.	33'-3 TO 37'-9	373	11 VAR.	30'-3 TO 37'-9	562	15 VAR.	27'-5 TO 37'-11	736	18 VAR.	24'-7 TO 37'-4	837	22 VAR.	21'-8 TO 37'-5	976	26 VAR.	18'-10 TO 37'-7	1102	6m2
6m3	APRON, TRANS., TOP		46 VAR.	10'-3 TO 35'-7	1583	42 VAR.	9'-7 TO 32'-7	1330	39 VAR.	8'-3 TO 29'-8	1111	35 VAR.	7'-8 TO 26'-10	907	31 VAR.	7'-1 TO 24'-0	724	27 VAR.	6'-5 TO 21'-0	556	23 VAR.	5'-10 TO 18'-2	415	6m3
6m4	APRON, TRANS., BOTT.		24 VAR.	47'-4 TO 71'-10	2229	22 VAR.	47'-1 TO 69'-6	2001	20 VAR.	46'-10 TO 67'-1	1779	18 VAR.	46'-10 TO 65'-0	1573	16 VAR.	46'-10 TO 62'-10	1372	14 VAR.	46'-7 TO 60'-6	1173	12 VAR.	46'-7 TO 58'-4	986	6m4
6p1	CURTAIN, HORIZONTAL		4	53'-8	336	4	53'-6	335	4	53'-3	333	4	53'-3	333	4	53'-3	333	4	53'-0	332	4	52'-11	331	6p1
6p2	CURTAIN, HORIZONTAL LONG		4	42'-4	268	4	39'-2	235	4	36'-0	216	4	32'-10	197	4	29'-8	178	4	26'-6	159	4	23'-4	140	6p1
6p3	CURTAIN, HORIZONTAL SHORT		4	15'-8	94	4	14'-7	88	4	13'-7	82	4	12'-7	76	4	11'-7	70	4	10'-7	64	4	9'-6	57	6p2
6s1	WING SLOPE, BOTH F. LONG		2	8'-4	25	2	8'-4	25	2	8'-4	25	2	8'-4	25	2	8'-4	25	2	8'-4	25	2	8'-4	25	6s1
6s2	WING SLOPE, BOTH F. SHORT		2	7'-11	24	2	7'-11	24	2	7'-11	24	2	7'-11	24	2	7'-11	24	2	7'-11	24	2	7'-11	24	6s2
6s3	WING SLOPE, BOTH F. LONG		2	69'-0	214	2	63'-1	196	2	57'-2	178	2	51'-3	161	2	45'-4	143	2	39'-5	118	2	33'-6	101	6s3
6s4	WING SLOPE, BOTH F. SHORT		2	42'-1	133	2	38'-6	116	2	34'-10	105	2	31'-2	94	2	27'-7	83	2	23'-11	72	2	20'-3	61	6s4
6s5	WING SLOPE, F.F. LONG		1	74'-3	115	1	68'-4	106	1	62'-5	97	1	56'-6	88	1	50'-7	79	1	44'-8	70	1	38'-9	58	6s5
6s6	WING SLOPE, F.F. SHORT		1	47'-1	74	1	43'-5	69	1	39'-10	60	1	36'-2	54	1	32'-6	49	1	28'-11	43	1	25'-3	38	6s6
6s7	INTERIOR WALLS, BOTH F.H.		4	38'-8	232	4	35'-9	215	4	32'-10	197	4	29'-10	179	4	26'-10	161	4	23'-11	144	4	20'-11	126	6s7
5t1	CURTAIN, VERTICAL		77	7'-11	636	74	7'-8	592	69	7'-5	534	66	7'-2	493	62	6'-11	447	59	6'-8	410	55	6'-5	368	5t1
ESTIMATED QUANTITIES ONE HEADWALL	REINF. STEEL			19,591 LB			17,550 LB			15,561 LB			13,722 LB			11,885 LB			10,228 LB			8671 LB		
	CONCRETE	PARAPET Δ	5.4			5.3			5.2			5.2			5.2			5.1			5.1			
		WINGWALLS	50.5	172.5 CY		39.6	149.0 CY		30.3	127.7 CY		25.2	112.0 CY		20.4	97.0 CY		14.6	80.9 CY		11.1	68.2 CY		
		FOOTING *	116.6			104.1			92.2			81.6			71.4			61.2			52.0			

BENT BAR DETAILS

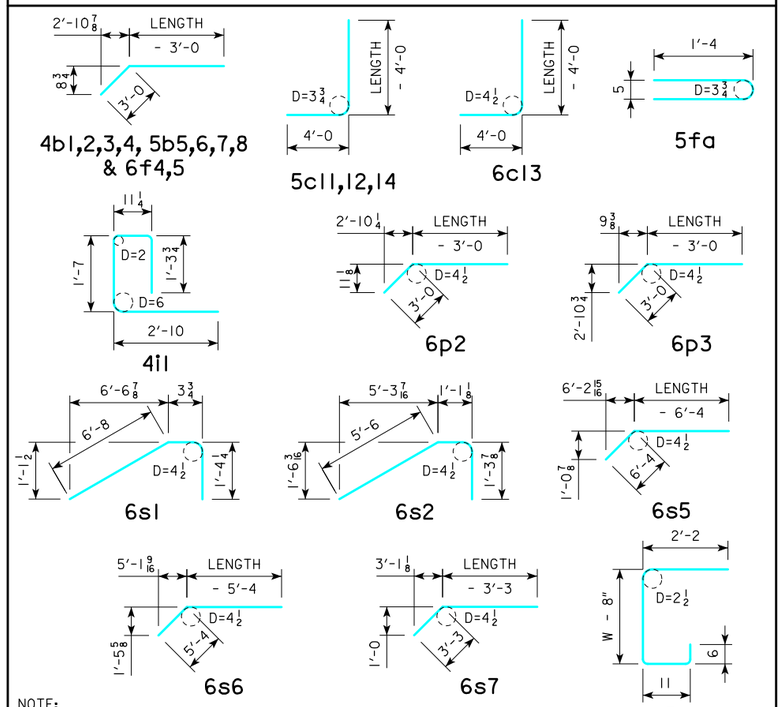

NOTE:
ALL DIMENSIONS ARE OUT TO OUT. D = PIN DIAMETER.

Δ INCLUDES TOP OF WINGWALL QUANTITIES.
* ASSUMES APRON AND FLOOR ARE EQUAL THICKNESS, ADJUST CONCRETE QUANTITIES FOR TRANSITION WHERE APRON AND FLOOR THICKNESS ARE NOT EQUAL.

NOTE:
WEIGHT OF BARS OVER 40'-0 LONG INCLUDES AN ALLOWANCE OF 2'-3 FOR LAP.
LENGTHS SHOWN FOR BARS OVER 40'-0 LONG DO NOT INCLUDE LAP.

"SHORT" DENOTES SHORT WINGWALL
"LONG" DENOTES LONG WINGWALL

HEADWALL NOTES:

1. SEE DRAWING TRRCB G1-12 FOR GENERAL INFORMATION, SPECIFICATIONS, AND DESIGN STRESSES.
2. THIS HEADWALL IS BASED ON A 3:1 SLOPE NORMAL TO CENTERLINE OF ROADWAY.
3. THE SIDES OF THE FOOTING ARE TO BE FORMED TO INSURE CORRECT LINE AND GRADE.
4. ALL SLAB AND FLOOR REINFORCING STEEL IS TO BE SUPPORTED BY BAR CHAIRS AT INTERVALS OF NOT MORE THAN 3'-0 IN EITHER DIRECTION AS OUTLINED IN THE STANDARD SPECIFICATIONS.
5. CLEAR DISTANCE FROM FACE OF CONCRETE TO NEAR REINFORCING BAR IS TO BE 2" UNLESS OTHERWISE NOTED OR SHOWN. CLEARANCE TO THE BOTTOM ENDS OF VERTICAL BARS SHALL BE 3 INCHES.
6. CONCRETE QUANTITIES ARE ESTIMATED FROM BACK OF PARAPET.
7. HORIZONTAL TAILS OF BARS "b" & "s" ESTIMATED TO EXTEND 2'-0 BEYOND BACK OF PARAPET (INTO END OF BARREL). LONGITUDINAL BARS "d", "6f1", AND "6f3" ESTIMATED TO PROJECT INTO END SECTION OF BARREL A MINIMUM OF 2'-0 BEYOND BACK OF PARAPET.
8. THE "LENGTH" COLUMN REFLECTS TOTAL NUMBER OF FEET NECESSARY TO MEET THESE REQUIREMENTS.

LATEST REVISION DATE

APPROVED BY BRIDGE ENGINEER

IOWA DOT Highway Division

STANDARD DESIGN

TRIPLE REINFORCED CONCRETE BOX CULVERTS

APRIL, 2012

FLARED WING HEADWALLS

45° SKEW

TRH 45-7-12

ENGLISHLRFDSIGNEDTRIPLECULVERTS.DGN - TRH 45-7-12 - THIS SHEET ISSUED 04-12.

BILL OF REINFORCING FOR ONE HEADWALL 45° SKEW CULVERT SPAN x CULVERT HEIGHT

BAR	LOCATION	SHAPE	12' x 5' NO.	12' x 5' LENGTH	12' x 5' WT.	12' x 4' NO.	12' x 4' LENGTH	12' x 4' WT.	10' x 12' NO.	10' x 12' LENGTH	10' x 12' WT.	10' x 11' NO.	10' x 11' LENGTH	10' x 11' WT.	10' x 10' NO.	10' x 10' LENGTH	10' x 10' WT.	10' x 9' NO.	10' x 9' LENGTH	10' x 9' WT.	10' x 8' NO.	10' x 8' LENGTH	10' x 8' WT.	BAR
5fa	FENCE ANCHOR (GALV.)		2	2'-10	6	2	2'-10	6	2	2'-10	6	2	2'-10	6	2	2'-10	6	2	2'-10	6	2	2'-10	6	5fa
4b1	WINGWALL, B.F.H. LONG		1	33'-10	23	1	28'-0	19	1	74'-8	51	1	68'-10	47	1	63'-0	44	1	57'-2	40	1	51'-4	36	4b1
4b2	WINGWALL, B.F.H. SHORT		1	21'-5	14	1	17'-11	12	1	45'-10	32	1	42'-4	30	1	38'-10	26	1	35'-5	24	1	31'-11	21	4b2
4b3	WINGWALL, B.F.H. LONG		3 VAR.	19'-5 TO 31'-1	51	2 VAR.	19'-5 TO 25'-3	30	10 VAR.	19'-6 TO 71'-10	314	9 VAR.	19'-6 TO 66'-1	265	8 VAR.	19'-6 TO 60'-3	219	7 VAR.	19'-6 TO 54'-5	177	6 VAR.	19'-6 TO 48'-7	139	4b3
4b4	WINGWALL, B.F.H. SHORT		3 VAR.	12'-10 TO 19'-9	33	2 VAR.	12'-10 TO 16'-3	19	10 VAR.	12'-10 TO 44'-3	194	9 VAR.	12'-10 TO 40'-9	163	8 VAR.	12'-10 TO 37'-3	134	7 VAR.	12'-10 TO 33'-9	109	6 VAR.	12'-10 TO 30'-3	86	4b4
5b5	WINGWALL, F.F.H. LONG		1	33'-11	35	1	28'-1	29	1	74'-8	80	1	68'-10	74	1	63'-0	68	1	57'-2	62	1	51'-4	56	5b5
5b6	WINGWALL, F.F.H. SHORT		1	21'-5	22	1	17'-11	19	1	45'-11	50	1	42'-5	47	1	38'-11	41	1	35'-5	37	1	31'-11	33	5b6
5b7	WINGWALL, F.F.H. LONG		4 VAR.	13'-8 TO 31'-1	93	3 VAR.	13'-8 TO 25'-3	61	11 VAR.	13'-9 TO 71'-11	506	10 VAR.	13'-9 TO 66'-1	428	9 VAR.	13'-9 TO 60'-3	357	8 VAR.	13'-9 TO 54'-5	291	7 VAR.	13'-8 TO 48'-7	232	5b7
5b8	WINGWALL, F.F.H. SHORT		4 VAR.	9'-4 TO 19'-10	61	3 VAR.	9'-4 TO 16'-4	40	11 VAR.	9'-5 TO 44'-4	313	10 VAR.	9'-5 TO 40'-10	264	9 VAR.	9'-5 TO 37'-4	219	8 VAR.	9'-5 TO 33'-10	180	7 VAR.	9'-5 TO 30'-4	145	5b8
5b9	INTERIOR WALLS, BOTH F.H.		14 VAR.	2 EA. 6'-10 TO 17'-7	178	10 VAR.	2 EA. 7'-0 TO 14'-8	113	42 VAR.	2 EA. 6'-6 TO 37'-4	960	38 VAR.	2 EA. 6'-6 TO 34'-6	812	34 VAR.	2 EA. 6'-6 TO 31'-9	678	30 VAR.	2 EA. 6'-6 TO 28'-11	554	26 VAR.	2 EA. 6'-7 TO 26'-1	443	5b9
4c1	WINGWALL, F.F.V. LONG		31 VAR.	2'-9 TO 7'-11	110	25 VAR.	2'-9 TO 6'-11	81	72 VAR.	2'-8 TO 14'-11	423	66 VAR.	2'-8 TO 13'-10	364	60 VAR.	2'-8 TO 12'-10	311	54 VAR.	2'-8 TO 11'-10	262	49 VAR.	2'-8 TO 10'-11	222	4c1
4c2	WINGWALL, F.F.V. SHORT		19 VAR.	2'-10 TO 8'-0	69	15 VAR.	2'-10 TO 6'-10	48	43 VAR.	2'-9 TO 14'-9	251	40 VAR.	2'-9 TO 13'-11	223	36 VAR.	2'-9 TO 12'-9	186	33 VAR.	2'-9 TO 11'-11	162	29 VAR.	2'-9 TO 10'-9	131	4c2
4c3	WINGWALL, F.F.V. LONG		---	---	---	---	---	---	33 VAR.	6'-9 TO 12'-3	209	27 VAR.	6'-9 TO 11'-2	162	21 VAR.	6'-9 TO 10'-2	119	15 VAR.	6'-9 TO 9'-2	80	---	---	---	4c3
4c4	WINGWALL, F.F.V. SHORT		---	---	---	---	---	---	20 VAR.	8'-7 TO 14'-1	151	17 VAR.	8'-7 TO 13'-2	123	13 VAR.	8'-7 TO 12'-1	90	10 VAR.	8'-7 TO 11'-2	66	---	---	---	4c4
4c5	WINGWALL, F.F.V. LONG		2	6'-9	9	2	5'-9	8	1	13'-8	9	2	12'-8	17	2	11'-8	16	2	10'-8	14	1	9'-8	6	4c5
4c5	WINGWALL, F.F.V. SHORT		1	6'-9	5	2	5'-9	8	2	13'-8	18	1	12'-8	8	2	11'-8	16	1	10'-8	7	2	9'-8	13	4c5
4c6	INTERIOR WALLS, BOTH F.V.		4	1'-8	4	4	1'-8	4	4	1'-7	4	4	1'-7	4	4	1'-7	4	4	1'-7	4	4	1'-7	4	4c6
4c7	INTERIOR WALLS, BOTH F.V.		54 VAR.	2 EA. 1'-10 TO 5'-5	131	44 VAR.	2 EA. 1'-10 TO 4'-6	93	132 VAR.	2 EA. 1'-9 TO 12'-4	621	122 VAR.	2 EA. 1'-9 TO 11'-5	537	110 VAR.	2 EA. 1'-9 TO 10'-4	444	100 VAR.	2 EA. 1'-9 TO 9'-5	373	88 VAR.	2 EA. 1'-9 TO 8'-5	299	4c7
4c8	INTERIOR WALLS, BOTH F.V.		6	5'-7	22	6	4'-7	18	6	12'-6	50	6	11'-6	46	6	10'-6	42	6	9'-6	38	6	8'-6	34	4c8
5c9	WINGWALL, B.F.V. LONG		15 VAR.	2'-9 TO 5'-2	62	15 VAR.	2'-9 TO 5'-2	62	15 VAR.	2'-8 TO 5'-1	61	15 VAR.	2'-8 TO 5'-1	61	15 VAR.	2'-8 TO 5'-1	61	15 VAR.	2'-8 TO 5'-1	61	15 VAR.	2'-8 TO 5'-1	61	5c9
5c10	WINGWALL, B.F.V. SHORT		4 VAR.	2'-10 TO 3'-8	14	4 VAR.	2'-10 TO 3'-8	14	4 VAR.	2'-9 TO 3'-7	13	4 VAR.	2'-9 TO 3'-7	13	4 VAR.	2'-9 TO 3'-7	13	4 VAR.	2'-9 TO 3'-7	13	4 VAR.	2'-9 TO 3'-7	13	5c10
5c11	WINGWALL, B.F.V. LONG		16 VAR.	9'-4 TO 11'-11	177	10 VAR.	9'-4 TO 10'-11	106	57 VAR.	9'-3 TO 18'-11	837	51 VAR.	9'-3 TO 17'-10	720	45 VAR.	9'-3 TO 16'-10	612	39 VAR.	9'-3 TO 15'-10	510	34 VAR.	9'-3 TO 14'-11	428	5c11
5c12	WINGWALL, B.F.V. SHORT		15 VAR.	8'-0 TO 12'-0	156	11 VAR.	8'-0 TO 10'-10	108	39 VAR.	7'-11 TO 18'-9	542	36 VAR.	7'-11 TO 17'-11	485	32 VAR.	7'-11 TO 16'-9	412	29 VAR.	7'-11 TO 15'-11	360	25 VAR.	7'-11 TO 14'-9	296	5c12
6c13	WINGWALL, B.F.V. LONG		---	---	---	---	---	---	47	10'-6	741	41	10'-6	647	35	10'-6	552	29	10'-6	457	24	10'-6	379	6c13
6c13	WINGWALL, B.F.V. SHORT		---	---	---	---	---	---	28	10'-6	442	25	10'-6	394	21	10'-6	331	18	10'-6	284	14	10'-6	221	6c13
5c14	WINGWALL, B.F.V. LONG		2	10'-9	22	2	9'-9	20	1	17'-8	18	2	16'-8	35	2	15'-8	33	2	14'-8	31	1	13'-8	14	5c14
5c14	WINGWALL, B.F.V. SHORT		1	10'-9	11	2	9'-9	20	2	17'-8	37	1	16'-8	17	2	15'-8	33	1	14'-8	15	2	13'-8	29	5c14
4d1	APRON, LONGIT., BOTT.		25	18'-4	306	25	15'-6	259	21	38'-1	534	21	35'-3	494	21	32'-5	455	21	29'-7	415	21	26'-9	375	4d1
4d2	APRON, LONGIT., BOTT. LONG		3	27'-8	55	3	22'-0	44	3	68'-5	142	3	62'-7	130	3	56'-8	118	3	50'-10	106	3	45'-0	95	4d2
4d3	APRON, LONGIT., BOTT. SHORT		3	17'-10	36	3	14'-5	29	3	42'-2	89	3	38'-8	77	3	35'-1	70	3	31'-7	63	3	28'-2	56	4d3
6f1	APRON, LONGIT., TOP		37	18'-4	1019	37	15'-6	861	31	38'-1	1773	31	35'-3	1641	31	32'-5	1509	31	29'-7	1377	31	26'-9	1246	6f1
6f2	APRON, LONGIT., TOP LONG		5 VAR.	6'-10 TO 15'-0	82	4 VAR.	6'-0 TO 12'-2	55	15 VAR.	6'-6 TO 34'-10	466	14 VAR.	5'-8 TO 32'-0	396	12 VAR.	6'-11 TO 29'-2	325	11 VAR.	6'-1 TO 26'-4	268	9 VAR.	7'-3 TO 23'-6	208	6f2
6f3	APRON, LONGIT., TOP SHORT		3 VAR.	8'-6 TO 15'-4	54	2 VAR.	9'-1 TO 12'-6	32	9 VAR.	8'-1 TO 35'-2	292	8 VAR.	8'-8 TO 32'-4	246	8 VAR.	5'-9 TO 29'-6	212	7 VAR.	6'-4 TO 26'-8	173	6 VAR.	6'-10 TO 23'-10	138	6f3
6f4	APRON, LONGIT., TOP LONG		1	33'-11	51	1	28'-1	42	1	74'-8	116	1	68'-10	107	1	63'-0	98	1	57'-2	89	1	51'-4	80	6f4
6f5	APRON, LONGIT., TOP SHORT		1	21'-5	32	1	17'-11	27	1	45'-11	72	1	42'-5	67	1	38'-11	58	1	35'-5	53	1	31'-11	48	6f5
4i1	PARAPET, VERTICAL		75	6'-8	334	75	6'-8	334	65	6'-8	289	63	6'-8	281	63	6'-8	281	63	6'-8	281	63	6'-8	281	4i1
7ji	PARAPET, HORIZONTAL		4	54'-8	465	4	54'-8	465	4	47'-7	407	4	47'-1	403	4	46'-8	400	4	46'-8	400	4	46'-8	400	7ji
6m1	APRON, TRANS., TOP		27 VAR.	16'-0 TO 35'-6	1044	27 VAR.	13'-2 TO 32'-8	929	23 VAR.	37'-11 TO 42'-0	1417	23 VAR.	37'-6 TO 41'-8	1398	20 VAR.	37'-2 TO 40'-9	1184	16 VAR.	37'-2 TO 40'-0	930	13 VAR.	37'-2 TO 39'-5	748	6m1
6m2	APRON, TRANS., TOP		20 VAR.	4'-8 TO 15'-4	300	16 VAR.	4'-1 TO 12'-6	199	4 VAR.	42'-3 TO 43'-5	271	1 VAR.	41'-11 TO 41'-11	66	3 VAR.	30'-3 TO 31'-9	140	7 VAR.	27'-5 TO 31'-11	312	10 VAR.	24'-7 TO 31'-4	420	6m2
6m3	APRON, TRANS., TOP		---	---	---	---	---	---	42 VAR.	10'-3 TO 33'-4	1375	41 VAR.	9'-7 TO 32'-1	1283	39 VAR.	8'-3 TO 29'-8	1111	35 VAR.	7'-8 TO 26'-10	907	31 VAR.	7'-1 TO 24'-0	724	6m3
6m4	APRON, TRANS., BOTT.		10 VAR.	46'-7 TO 56'-2	805	8 VAR.	46'-7 TO 54'-1	632	24 VAR.	38'-10 TO 63'-4	1916	22 VAR.	38'-7 TO 61'-0	1713	20 VAR.	38'-4 TO 58'-7	1516	18 VAR.	38'-4 TO 56'-6	1336	16 VAR.	38'-4 TO 54'-4	1161	6m4
6p1	CURTAIN, HORIZONTAL		4	52'-11	331	4	52'-11	331	4	45'-3	285	4	45'-0	284	4	44'-9	282	4	44'-9	282	4	44'-9	282	6p1
6p2	CURTAIN, HORIZONTAL LONG		4	20'-2	121	4	17'-0	102	4	42'-4	268	4	39'-2	235	4	36'-0	216	4	32'-10	197	4	29'-8	178	6p1
6p3	CURTAIN, HORIZONTAL SHORT		4	8'-6	51	4	7'-6	45	4	15'-8	94	4	14'-7	88	4	13'-7	82	4	12'-7	76	4	11'-7	70	6p2
6s1	WING SLOPE, BOTH F. LONG		2	8'-4	25	2	8'-4	25	2	8'-4	25	2	8'-4	25	2	8'-4	25	2	8'-4	25	2	8'-4	25	6s1
6s2	WING SLOPE, BOTH F. SHORT		2	7'-11	24	2	7'-11	24	2	7'-11	24	2	7'-11	24	2	7'-11	24	2	7'-11	24	2	7'-11	24	6s2
6s3	WING SLOPE, BOTH F. LONG		2	27'-7	83	2	21'-8	65	2	69'-0	214	2	63'-1	196	2	57'-2	178	2	51'-3	161	2	45'-4	143	6s3
6s4	WING SLOPE, BOTH F. SHORT		2	16'-8	50	2	13'-0	39	2	42'-1	133	2	38'-6	116	2	34'-10	105	2	31'-2	94	2	27'-7	83	6s4
6s5	WING SLOPE, F.F. LONG		1	32'-10	49	1	26'-11	40	1	74'-3	115	1	68'-4	106	1	62'-5	97	1	56'-6	88	1	50'-7	79	6s5
6s6	WING SLOPE, F.F. SHORT		1	21'-7	32	1	18'-0	27	1	47'-1	74	1	43'-5	69	1	39'-10	60	1	36'-2	54	1	32'-6	49	6s6
6s7	INTERIOR WALLS, BOTH F.H.		4	17'-11	108	4	14'-11	90	4	38'-8	232	4	35'-9	215	4	32'-10	197	4	29'-10	179	4	26'-10	161	6s7
5t1	CURTAIN, VERTICAL		53	6'-5	355	49	6'-5	328	69	7'-11	570	66	7'-8	528	63	7'-5	487	60	7'-2	448	56	6'-11	404	5t1
ESTIMATED QUANTITIES ONE HEADWALL	REINF. STEEL			7120 LB			5962 LB			18,126 LB			16,180 LB			14,297 LB			12,555 LB			10,825 LB		
	CONCRETE	PARAPET Δ	5.1			5.1			4.8			4.7			4.6			4.6			4.6			
		WINGWALLS	8.1	57.4 CY		5.5	47.3 CY		50.5	155.8 CY		39.6	133.7 CY		30.3	113.8 CY		25.2	99.4 CY		20.4	85.7 CY		
		FOOTING *	44.2			36.7			100.5			89.4			78.9			69.6			60.7			

BENT BAR DETAILS

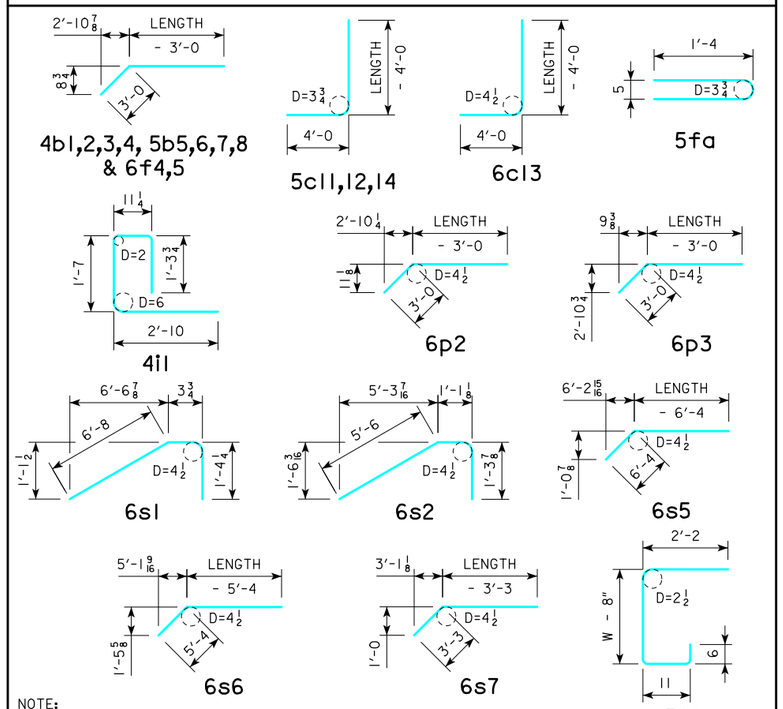

NOTE:
ALL DIMENSIONS ARE OUT TO OUT. D = PIN DIAMETER.

Δ INCLUDES TOP OF WINGWALL QUANTITIES.
* ASSUMES APRON AND FLOOR ARE EQUAL THICKNESS, ADJUST CONCRETE QUANTITIES FOR TRANSITION WHERE APRON AND FLOOR THICKNESS ARE NOT EQUAL.

NOTE:
WEIGHT OF BARS OVER 40'-0 LONG INCLUDES AN ALLOWANCE OF 2'-3 FOR LAP.
LENGTHS SHOWN FOR BARS OVER 40'-0 LONG DO NOT INCLUDE LAP.

"SHORT" DENOTES SHORT WINGWALL
"LONG" DENOTES LONG WINGWALL

HEADWALL NOTES:

1. SEE DRAWING TRRCB G1-12 FOR GENERAL INFORMATION, SPECIFICATIONS, AND DESIGN STRESSES.
2. THIS HEADWALL IS BASED ON A 3:1 SLOPE NORMAL TO CENTERLINE OF ROADWAY.
3. THE SIDES OF THE FOOTING ARE TO BE FORMED TO INSURE CORRECT LINE AND GRADE.
4. ALL SLAB AND FLOOR REINFORCING STEEL IS TO BE SUPPORTED BY BAR CHAIRS AT INTERVALS OF NOT MORE THAN 3'-0 IN EITHER DIRECTION AS OUTLINED IN THE STANDARD SPECIFICATIONS.
5. CLEAR DISTANCE FROM FACE OF CONCRETE TO NEAR REINFORCING BAR IS TO BE 2" UNLESS OTHERWISE NOTED OR SHOWN. CLEARANCE TO THE BOTTOM ENDS OF VERTICAL BARS SHALL BE 3 INCHES.
6. CONCRETE QUANTITIES ARE ESTIMATED FROM BACK OF PARAPET.
7. HORIZONTAL TAILS OF BARS "b" & "s" ESTIMATED TO EXTEND 2'-0 BEYOND BACK OF PARAPET (INTO END OF BARREL). LONGITUDINAL BARS "d", "6f1", AND "6f3" ESTIMATED TO PROJECT INTO END SECTION OF BARREL A MINIMUM OF 2'-0 BEYOND BACK OF PARAPET.
8. THE "LENGTH" COLUMN REFLECTS TOTAL NUMBER OF FEET NECESSARY TO MEET THESE REQUIREMENTS.

LATEST REVISION DATE

APPROVED BY BRIDGE ENGINEER

IOWA DOT Highway Division

STANDARD DESIGN

TRIPLE REINFORCED CONCRETE BOX CULVERTS

APRIL, 2012

FLARED WING HEADWALLS

45° SKEW

TRH 45-8-12

ENGLISHLRFDSIGNEDTRIPLECULVERTS.DGN - TRH 45-8-12 - THIS SHEET ISSUED 04-12.

BILL OF REINFORCING FOR ONE HEADWALL 45° SKEW CULVERT SPAN x CULVERT HEIGHT

BAR	LOCATION	SHAPE	10′ x 7′ NO.	10′ x 7′ LENGTH	10′ x 7′ WT.	10′ x 6′ NO.	10′ x 6′ LENGTH	10′ x 6′ WT.	10′ x 5′ NO.	10′ x 5′ LENGTH	10′ x 5′ WT.	10′ x 4′ NO.	10′ x 4′ LENGTH	10′ x 4′ WT.	BAR
5fa	FENCE ANCHOR (GALV.)		2	2′-10	6	2	2′-10	6	2	2′-10	6	2	2′-10	6	5fa
4b1	WINGWALL, B.F.H. LONG		1	45′-6	32	1	39′-8	26	1	33′-10	23	1	28′-0	19	4b1
4b2	WINGWALL, B.F.H. SHORT		1	28′-5	19	1	24′-11	17	1	21′-5	14	1	17′-11	12	4b2
4b3	WINGWALL, B.F.H. LONG		5 VAR.	19′-6 TO 42′-9	105	4 VAR.	19′-5 TO 36′-11	75	3 VAR.	19′-5 TO 31′-1	51	2 VAR.	19′-5 TO 25′-3	30	4b3
4b4	WINGWALL, B.F.H. SHORT		5 VAR.	12′-10 TO 26′-9	66	4 VAR.	12′-10 TO 23′-3	48	3 VAR.	12′-10 TO 19′-9	33	2 VAR.	12′-10 TO 16′-3	19	4b4
5b5	WINGWALL, F.F.H. LONG		1	45′-6	50	1	39′-9	41	1	33′-11	35	1	28′-1	29	5b5
5b6	WINGWALL, F.F.H. SHORT		1	28′-5	30	1	24′-11	26	1	21′-5	22	1	17′-11	19	5b6
5b7	WINGWALL, F.F.H. LONG		6 VAR.	13′-8 TO 42′-9	179	5 VAR.	13′-8 TO 36′-11	132	4 VAR.	13′-8 TO 31′-1	93	3 VAR.	13′-8 TO 25′-3	61	5b7
5b8	WINGWALL, F.F.H. SHORT		6 VAR.	9′-4 TO 26′-10	113	5 VAR.	9′-4 TO 23′-4	85	4 VAR.	9′-4 TO 19′-10	61	3 VAR.	9′-4 TO 16′-4	40	5b8
5b9	INTERIOR WALLS, BOTH F.H.		22 VAR.	2 EA. 6′-7 TO 23′-3	342	18 VAR.	2 EA. 6′-8 TO 20′-5	254	14 VAR.	2 EA. 6′-10 TO 17′-7	178	10 VAR.	2 EA. 7′-0 TO 14′-8	113	5b9
4c1	WINGWALL, F.F.V. LONG		43 VAR.	2′-8 TO 9′-11	181	37 VAR.	2′-8 TO 8′-11	143	31 VAR.	2′-8 TO 7′-10	109	25 VAR.	2′-8 TO 6′-10	79	4c1
4c2	WINGWALL, F.F.V. SHORT		26 VAR.	2′-9 TO 9′-11	110	22 VAR.	2′-9 TO 8′-9	85	19 VAR.	2′-9 TO 7′-11	68	15 VAR.	2′-9 TO 6′-9	48	4c2
4c3	WINGWALL, F.F.V. LONG		---	---	---	---	---	---	---	---	---	---	---	---	4c3
4c4	WINGWALL, F.F.V. SHORT		---	---	---	---	---	---	---	---	---	---	---	---	4c4
4c5	WINGWALL, F.F.V. LONG		1	8′-8	6	1	7′-8	5	2	6′-8	9	2	5′-8	8	4c5
4c5	WINGWALL, F.F.V. SHORT		1	8′-8	6	2	7′-8	10	1	6′-8	4	2	5′-8	8	4c5
4c6	INTERIOR WALLS, BOTH F.V.		4	1′-7	4	4	1′-7	4	4	1′-7	4	4	1′-7	4	4c6
4c7	INTERIOR WALLS, BOTH F.V.		76 VAR.	2 EA. 1′-9 TO 7′-4	231	66 VAR.	2 EA. 1′-9 TO 6′-5	180	54 VAR.	2 EA. 1′-9 TO 5′-4	128	44 VAR.	2 EA. 1′-9 TO 4′-5	91	4c7
4c8	INTERIOR WALLS, BOTH F.V.		6	7′-6	30	6	6′-6	26	6	5′-6	22	6	4′-6	18	4c8
5c9	WINGWALL, B.F.V. LONG		15 VAR.	2′-8 TO 5′-1	61	15 VAR.	2′-8 TO 5′-1	61	15 VAR.	2′-8 TO 5′-1	61	15 VAR.	2′-8 TO 5′-1	61	5c9
5c10	WINGWALL, B.F.V. SHORT		4 VAR.	2′-9 TO 3′-7	13	4 VAR.	2′-9 TO 3′-7	13	4 VAR.	2′-9 TO 3′-7	13	4 VAR.	2′-9 TO 3′-7	13	5c10
5c11	WINGWALL, B.F.V. LONG		28 VAR.	9′-3 TO 13′-11	338	22 VAR.	9′-3 TO 12′-11	254	16 VAR.	9′-3 TO 11′-10	176	10 VAR.	9′-3 TO 10′-10	105	5c11
5c12	WINGWALL, B.F.V. SHORT		22 VAR.	7′-11 TO 13′-11	250	18 VAR.	7′-11 TO 12′-9	194	15 VAR.	7′-11 TO 11′-11	155	11 VAR.	7′-11 TO 10′-9	107	5c12
6c13	WINGWALL, B.F.V. LONG		18	10′-6	284	12	10′-6	189	---	---	---	---	---	---	6c13
6c13	WINGWALL, B.F.V. SHORT		11	10′-6	173	7	10′-6	110	---	---	---	---	---	---	6c13
5c14	WINGWALL, B.F.V. LONG		1	12′-8	13	1	11′-8	12	2	10′-8	22	2	9′-8	20	5c14
5c14	WINGWALL, B.F.V. SHORT		1	12′-8	13	2	11′-8	24	1	10′-8	11	2	9′-8	20	5c14
4d1	APRON, LONGIT., BOTT.		21	24′-0	337	21	21′-2	297	21	18′-4	257	21	15′-6	217	4d1
4d2	APRON, LONGIT., BOTT. LONG		3	39′-3	79	3	33′-6	67	3	27′-8	55	3	22′-0	44	4d2
4d3	APRON, LONGIT., BOTT. SHORT		3	24′-8	49	3	21′-3	43	3	17′-10	36	3	14′-5	29	4d3
6f1	APRON, LONGIT., TOP		31	24′-0	1117	31	21′-2	986	31	18′-4	854	31	15′-6	722	6f1
6f2	APRON, LONGIT., TOP LONG		8 VAR.	6′-5 TO 20′-8	163	7 VAR.	5′-7 TO 17′-10	123	5 VAR.	6′-10 TO 15′-0	82	4 VAR.	6′-0 TO 12′-2	55	6f2
6f3	APRON, LONGIT., TOP SHORT		5 VAR.	7′-4 TO 21′-0	106	4 VAR.	7′-11 TO 18′-2	78	3 VAR.	8′-6 TO 15′-4	54	2 VAR.	9′-1 TO 12′-6	32	6f3
6f4	APRON, LONGIT., TOP LONG		1	45′-6	72	1	39′-9	60	1	33′-11	51	1	28′-1	42	6f4
6f5	APRON, LONGIT., TOP SHORT		1	28′-5	43	1	24′-11	37	1	21′-5	32	1	17′-11	27	6f5
4i1	PARAPET, VERTICAL		63	6′-8	281	63	6′-8	281	63	6′-8	281	63	6′-8	281	4i1
7ji	PARAPET, HORIZONTAL		4	46′-2	396	4	46′-2	396	4	46′-2	396	4	46′-2	396	7ji
6m1	APRON, TRANS., TOP		9 VAR.	36′-10 TO 38′-4	508	5 VAR.	36′-10 TO 37′-7	279	1 VAR.	36′-10 TO 36′-10	55	23 VAR.	13′-2 TO 29′-8	740	6m1
6m2	APRON, TRANS., TOP		14 VAR.	21′-8 TO 31′-5	558	18 VAR.	18′-10 TO 31′-7	682	22 VAR.	16′-0 TO 31′-9	789	16 VAR.	4′-1 TO 12′-6	199	6m2
6m3	APRON, TRANS., TOP		27 VAR.	6′-5 TO 21′-0	556	23 VAR.	5′-10 TO 18′-2	415	20 VAR.	4′-8 TO 15′-4	300	---	---	---	6m3
6m4	APRON, TRANS., BOTT.		14 VAR.	38′-1 TO 52′-0	988	12 VAR.	38′-1 TO 49′-10	826	10 VAR.	38′-1 TO 47′-9	672	8 VAR.	38′-1 TO 45′-7	523	6m4
6p1	CURTAIN, HORIZONTAL		4	44′-6	281	4	44′-6	281	4	44′-5	280	4	44′-5	280	6p1
6p2	CURTAIN, HORIZONTAL LONG		4	26′-6	159	4	23′-4	140	4	20′-2	121	4	17′-0	102	6p1
6p3	CURTAIN, HORIZONTAL SHORT		4	10′-7	64	4	9′-6	57	4	8′-6	51	4	7′-6	45	6p2
6s1	WING SLOPE, BOTH F. LONG		2	8′-4	25	2	8′-4	25	2	8′-4	25	2	8′-4	25	6s1
6s2	WING SLOPE, BOTH F. SHORT		2	7′-11	24	2	7′-11	24	2	7′-11	24	2	7′-11	24	6s2
6s3	WING SLOPE, BOTH F. LONG		2	39′-5	118	2	33′-6	101	2	27′-7	83	2	21′-8	65	6s3
6s4	WING SLOPE, BOTH F. SHORT		2	23′-11	72	2	20′-3	61	2	16′-8	50	2	13′-0	39	6s4
6s5	WING SLOPE, F.F. LONG		1	44′-8	70	1	38′-9	58	1	32′-10	49	1	26′-11	40	6s5
6s6	WING SLOPE, F.F. SHORT		1	28′-11	43	1	25′-3	38	1	21′-7	32	1	18′-0	27	6s6
6s7	INTERIOR WALLS, BOTH F.H.		4	23′-11	144	4	20′-11	126	4	17′-11	108	4	14′-11	90	6s7
5t1	CURTAIN, VERTICAL		53	6′-8	369	49	6′-5	328	47	6′-5	315	43	6′-5	288	5t1

ESTIMATED QUANTITIES ONE HEADWALL			10′ x 7′		10′ x 6′		10′ x 5′		10′ x 4′	
REINF. STEEL				9277 LB		7829 LB		6350 LB		5262 LB
CONCRETE	PARAPET Δ		4.4	70.8 CY	4.4	59.4 CY	4.4	49.7 CY	4.4	40.7 CY
	WINGWALLS		14.6		11.1		8.1		5.5	
	FOOTING *		51.8		43.9		37.2		30.8	

BENT BAR DETAILS

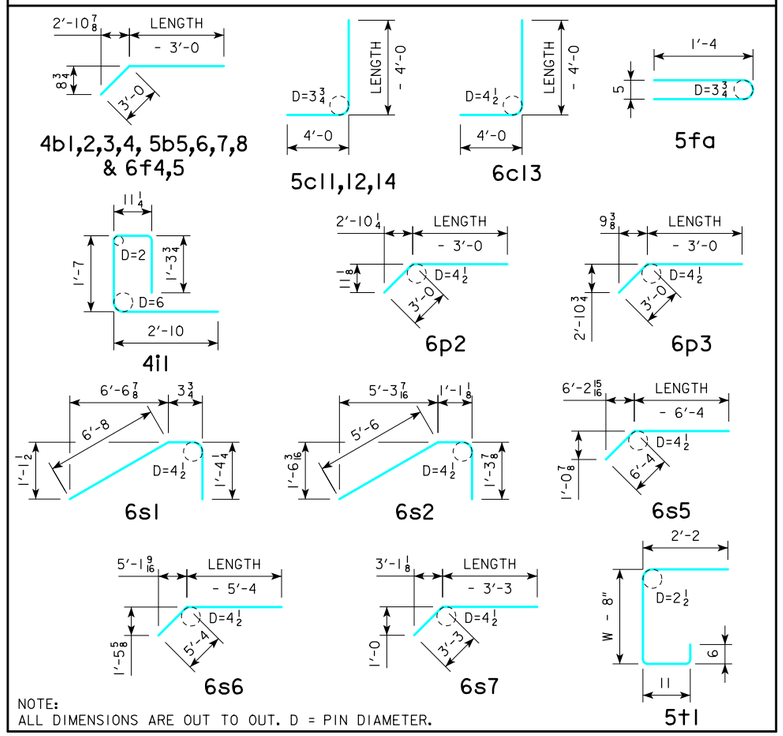

Δ INCLUDES TOP OF WINGWALL QUANTITIES.
* ASSUMES APRON AND FLOOR ARE EQUAL THICKNESS, ADJUST CONCRETE QUANTITIES FOR TRANSITION WHERE APRON AND FLOOR THICKNESS ARE NOT EQUAL.

NOTE:
WEIGHT OF BARS OVER 40′-0 LONG INCLUDES AN ALLOWANCE OF 2′-3 FOR LAP.
LENGTHS SHOWN FOR BARS OVER 40′-0 LONG DO NOT INCLUDE LAP.

"SHORT" DENOTES SHORT WINGWALL
"LONG" DENOTES LONG WINGWALL

HEADWALL NOTES:

1. SEE DRAWING TRRCB GI-12 FOR GENERAL INFORMATION, SPECIFICATIONS, AND DESIGN STRESSES.
2. THIS HEADWALL IS BASED ON A 3:1 SLOPE NORMAL TO CENTERLINE OF ROADWAY.
3. THE SIDES OF THE FOOTING ARE TO BE FORMED TO INSURE CORRECT LINE AND GRADE.
4. ALL SLAB AND FLOOR REINFORCING STEEL IS TO BE SUPPORTED BY BAR CHAIRS AT INTERVALS OF NOT MORE THAN 3′-0 IN EITHER DIRECTION AS OUTLINED IN THE STANDARD SPECIFICATIONS.
5. CLEAR DISTANCE FROM FACE OF CONCRETE TO NEAR REINFORCING BAR IS TO BE 2" UNLESS OTHERWISE NOTED OR SHOWN. CLEARANCE TO THE BOTTOM ENDS OF VERTICAL BARS SHALL BE 3 INCHES.
6. CONCRETE QUANTITIES ARE ESTIMATED FROM BACK OF PARAPET.
7. HORIZONTAL TAILS OF BARS "b" & "s" ESTIMATED TO EXTEND 2′-0 BEYOND BACK OF PARAPET (INTO END OF BARREL). LONGITUDINAL BARS "d", "6f1", AND "6f3" ESTIMATED TO PROJECT INTO END SECTION OF BARREL A MINIMUM OF 2′-0 BEYOND BACK OF PARAPET.
8. THE "LENGTH" COLUMN REFLECTS TOTAL NUMBER OF FEET NECESSARY TO MEET THESE REQUIREMENTS.

LATEST REVISION DATE

APPROVED BY BRIDGE ENGINEER

IOWA DOT Highway Division

STANDARD DESIGN

TRIPLE REINFORCED CONCRETE BOX CULVERTS

APRIL, 2012

FLARED WING HEADWALLS

45° SKEW

TRH 45-9-12

ENGLISHLRFDSIGNEDTRIPLECULVERTS.DGN - TRH 45-9-12 - THIS SHEET ISSUED 04-12.

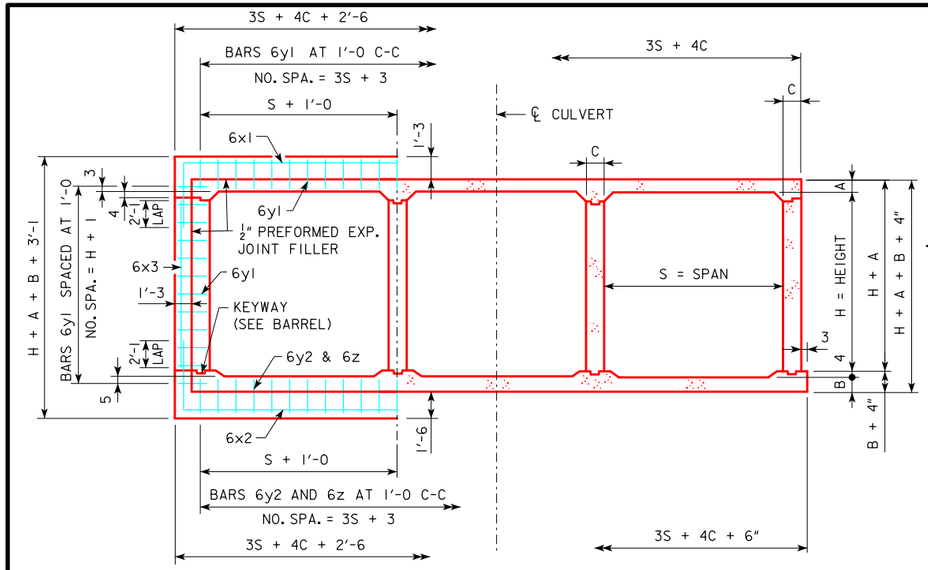

JOINT DETAIL
SECTION THRU BARREL

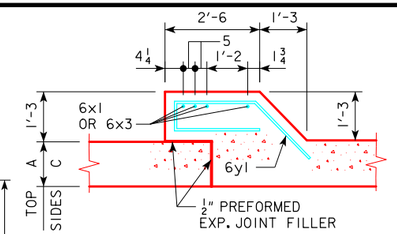

TOP & SIDES - BARS 6y1

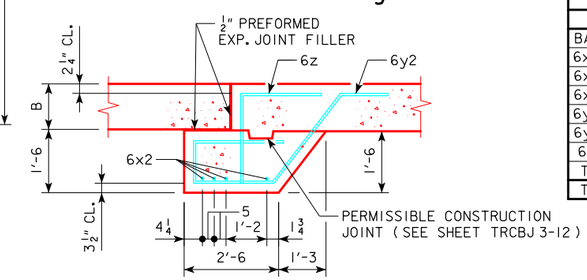

BOTTOM - BARS 6y2 & 6z

ESTIMATE OF QUANTITIES - ONE JOINT - 10' SPAN

BILL OF REINFORCING STEEL			10' x 4'			10' x 5'			10' x 6'			10' x 7'			10' x 8'		
BAR	LOCATION	SHAPE	NO.	LENGTH	WEIGHT	NO.	LENGTH	WEIGHT	NO.	LENGTH	WEIGHT	NO.	LENGTH	WEIGHT	NO.	LENGTH	WEIGHT
6x1	SLAB & WALLS		4	45'-3	272	4	45'-3	272	4	45'-3	272	4	45'-3	272	4	45'-3	272
6x2	FLOOR & WALLS		4	47'-5	285	4	49'-5	297	4	45'-1	271	4	45'-1	271	4	45'-1	271
6x3	WALLS		--	--	--	--	--	--	8	5'-4	64	8	6'-4	76	8	7'-4	88
6y1	TOP & SIDES		46	8'-0	553	48	8'-0	577	50	8'-0	601	52	8'-0	625	54	8'-0	649
6y2	BOTTOM		34	9'-6	485	34	9'-6	485	34	9'-6	485	34	9'-7	489	34	9'-7	489
6z	BOTTOM & FLOOR		34	3'-11	200	34	3'-11	200	34	3'-11	200	34	3'-11	200	34	3'-11	200
TOTAL WEIGHT (LB)					1796			1831			1893			1933			1969
TOTAL CONCRETE (CY)			13.0			13.3			13.6			13.9			14.2		

ESTIMATE OF QUANTITIES - ONE JOINT - 10' SPAN

BILL OF REINFORCING STEEL			10' x 9'			10' x 10'			10' x 11'			10' x 12'		
BAR	LOCATION	SHAPE	NO.	LENGTH	WEIGHT	NO.	LENGTH	WEIGHT	NO.	LENGTH	WEIGHT	NO.	LENGTH	WEIGHT
6x1	SLAB & WALLS		4	45'-5	273	4	45'-9	275	4	46'-1	277	4	46'-7	280
6x2	FLOOR & WALLS		4	45'-3	272	4	45'-7	274	4	45'-11	276	4	46'-5	279
6x3	WALLS		8	8'-4	100	8	9'-4	112	8	10'-4	124	8	11'-4	136
6y1	TOP & SIDES		56	8'-0	673	58	8'-0	697	60	8'-0	721	62	8'-0	745
6y2	BOTTOM		34	9'-7	489	34	9'-7	489	34	9'-7	489	34	9'-7	489
6z	BOTTOM & FLOOR		34	3'-11	200	34	3'-11	200	34	3'-11	200	34	3'-11	200
TOTAL WEIGHT (LB)					2007			2047			2087			2129
TOTAL CONCRETE (CY)			14.5			14.9			15.3			15.7		

BENT BAR DETAILS

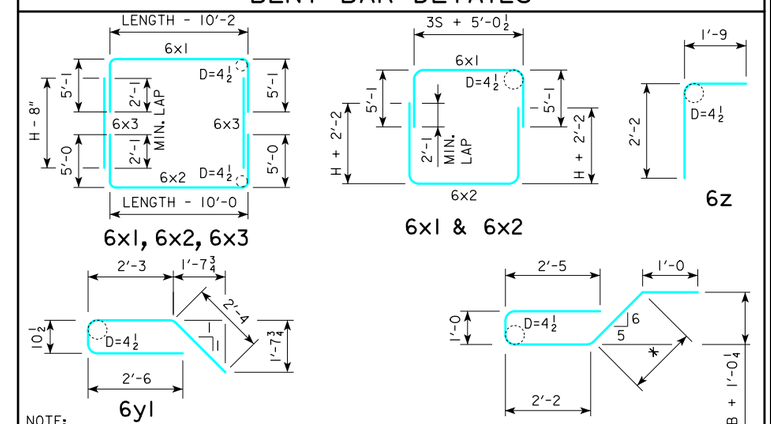

NOTE:
ALL DIMENSIONS ARE OUT TO OUT. D = PIN DIAMETER.
* 1.3 TIMES VERTICAL DIMENSION.

CONCRETE PLACEMENT

BARREL SIZE	BARREL DIMENSION			BELL JOINT QUANTITES (CY)		
	A	B	C	FOOTING	WALLS	SLAB
10' x 4'	12.5	14.5	9	6.511	1.047	5.441
10' x 5'	12.5	14.5	9	6.511	1.332	5.441
10' x 6'	12.5	14.5	9	6.511	1.618	5.441
10' x 7'	12.5	15	9	6.522	1.903	5.441
10' x 8'	12.5	15	9	6.522	2.189	5.441
10' x 9'	12.5	15	9.5	6.551	2.474	5.464
10' x 10'	12.5	15	10.5	6.608	2.760	5.512
10' x 11'	12.5	15	11.5	6.666	3.045	5.560
10' x 12'	12.5	15	13	6.751	3.331	5.631

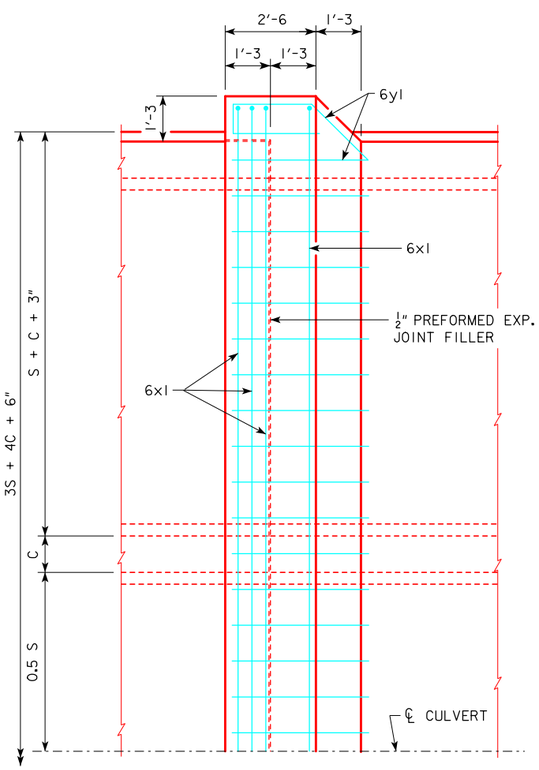

PLAN VIEW - SLAB

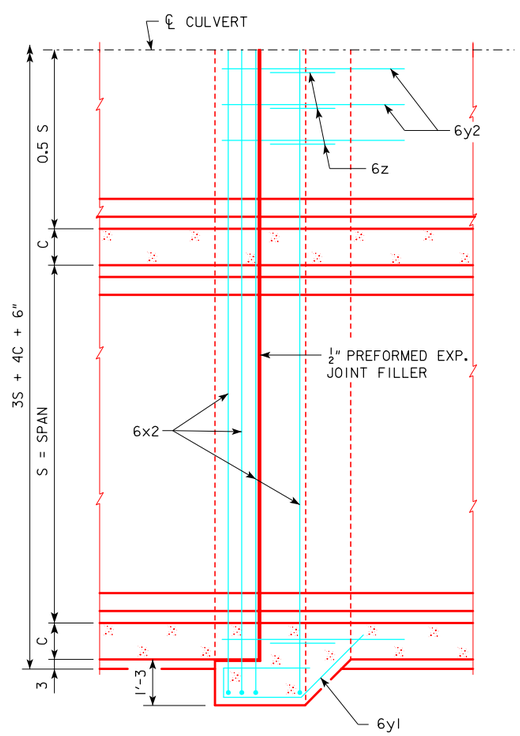

PLAN VIEW - FLOOR

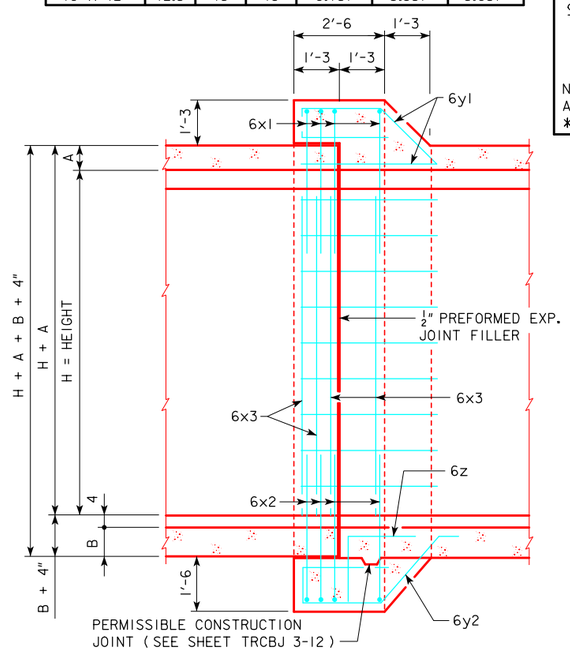

LONGITUDINAL SECTION

NOTES:

1. DIMENSIONS AND QUANTITIES SHOWN ARE BASED ON SLAB, FLOOR, AND WALL THICKNESSES (A, B, AND C, RESPECTIVELY). VALUES FOR THESE DIMENSIONS, UNDER VARYING FILL CONDITIONS, CAN BE FOUND ON THE TRRCB CULVERT BARREL DETAIL SHEETS.
2. CHANGE LENGTHS OF BARS 6x1, 6x2, 6z, AND ADJUST REINFORCING STEEL AND CONCRETE QUANTITIES ACCORDINGLY FOR SLAB, WALL AND FLOOR THICKNESSES OTHER THAN SHOWN.
3. ALL BAR LENGTHS ARE ESTIMATED WITH A 2" CLEARANCE FROM CONCRETE EDGE TO OUTSIDE OF BAR, EXCEPT AS NOTED.
4. MATERIAL AND CONSTRUCTION TO BE IN ACCORDANCE WITH THE CURRENT STANDARD SPECIFICATIONS OF I.D.O.T.
5. SEE SHEET TRRCB GI-12 FOR GENERAL INFORMATION, SPECIFICATIONS AND DESIGN STRESSES.
6. BARS 6x1 & 6x2 MAY BE FURNISHED IN TWO EQUAL LENGTHS ADDING 2'-3 TO THE OVERALL LENGTH TO OBTAIN A 2'-3 MIN. LAP. THE ABOVE IS TO BE PERFORMED AT NO ADDITIONAL COST TO THE CONTRACTING AUTHORITY.
7. BARREL FLOOR BARS m1 & m9 ARE TO BE SHORTENED 6" IN LENGTH AT BELL JOINTS.

07-13
LATEST REVISION DATE

APPROVED BY BRIDGE ENGINEER

IOWA DOT Highway Division

STANDARD DESIGN

TRIPLE REINFORCED CONCRETE BOX CULVERTS

APRIL, 2012

CULVERT BELL JOINTS

10' SPAN

TRCBJ 1-12

REVISED 07-13 - THE m9 BARS WERE ADDED TO NOTE NUMBER 7.
ENGLISHLRFDSIGNEDTRIPLECULVERTS.DGN - TRCBJ 1-12 - THIS SHEET ISSUED 04-12.

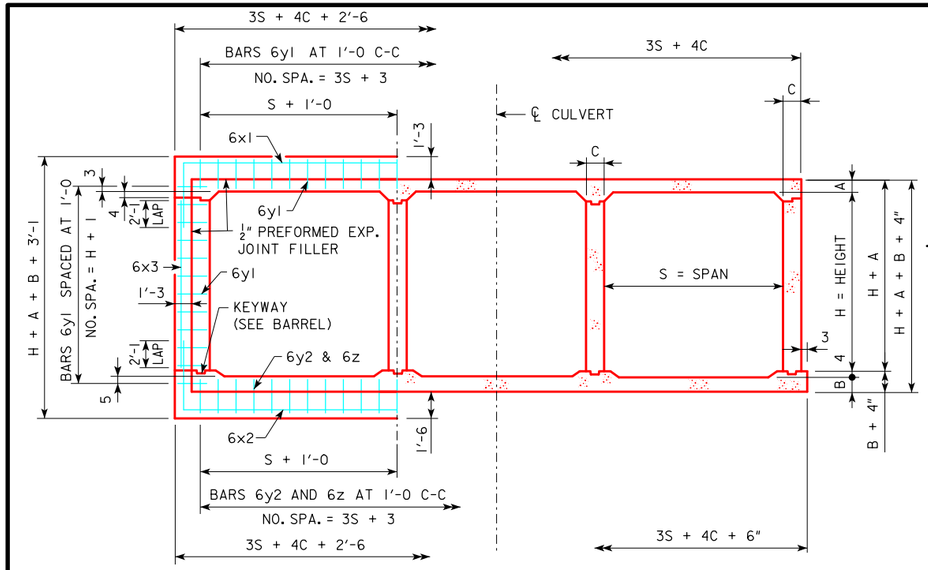

JOINT DETAIL
SECTION THRU BARREL

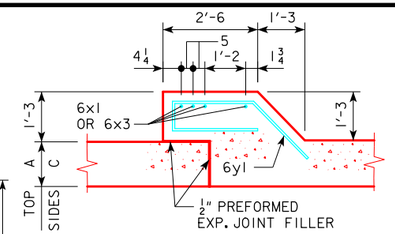

TOP & SIDES - BARS 6y1

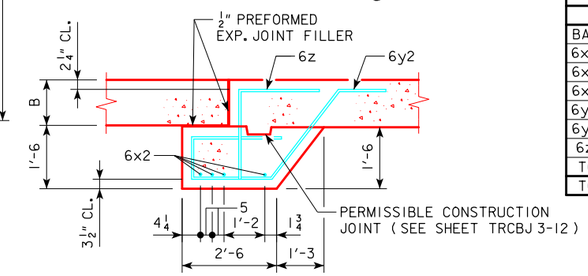

BOTTOM - BARS 6y2 & 6z

ESTIMATE OF QUANTITIES - ONE JOINT - 12' SPAN

BILL OF REINFORCING STEEL			12' x 4'			12' x 5'			12' x 6'			12' x 7'			12' x 8'		
BAR	LOCATION	SHAPE	NO.	LENGTH	WEIGHT	NO.	LENGTH	WEIGHT	NO.	LENGTH	WEIGHT	NO.	LENGTH	WEIGHT	NO.	LENGTH	WEIGHT
6x1	SLAB & WALLS		4	51'-3	308	4	51'-3	308	4	51'-3	308	4	51'-3	308	4	51'-3	308
6x2	FLOOR & WALLS		4	53'-5	321	4	55'-5	333	4	51'-1	307	4	51'-1	307	4	51'-1	307
6x3	WALLS		--	--	--	--	--	--	8	5'-4	64	8	6'-4	76	8	7'-4	88
6y1	TOP & SIDES		52	8'-0	625	54	8'-0	649	56	8'-0	673	58	8'-0	697	60	8'-0	721
6y2	BOTTOM		40	9'-9	586	40	9'-9	586	40	9'-9	586	40	9'-10	591	40	9'-10	591
6z	BOTTOM & FLOOR		40	4'-1	245	40	4'-1	245	40	4'-1	245	40	4'-1	245	40	4'-1	245
TOTAL WEIGHT (LB)					2085			2121			2183			2224			2260
TOTAL CONCRETE (CY)				15.0			15.3			15.6			15.9			16.1	

ESTIMATE OF QUANTITIES - ONE JOINT - 12' SPAN

BILL OF REINFORCING STEEL			12' x 9'			12' x 10'			12' x 11'			12' x 12'		
BAR	LOCATION	SHAPE	NO.	LENGTH	WEIGHT	NO.	LENGTH	WEIGHT	NO.	LENGTH	WEIGHT	NO.	LENGTH	WEIGHT
6x1	SLAB & WALLS		4	51'-5	309	4	51'-9	311	4	52'-3	314	4	52'-7	316
6x2	FLOOR & WALLS		4	51'-3	308	4	51'-7	310	4	52'-1	313	4	52'-5	315
6x3	WALLS		8	8'-4	100	8	9'-4	112	8	10'-4	124	8	11'-4	136
6y1	TOP & SIDES		62	8'-0	745	64	8'-0	769	66	8'-0	793	68	8'-0	817
6y2	BOTTOM		40	9'-10	591	40	9'-10	591	40	9'-10	591	40	9'-10	591
6z	BOTTOM & FLOOR		40	4'-1	245	40	4'-1	245	40	4'-1	245	40	4'-1	245
TOTAL WEIGHT (LB)					2298			2338			2380			2420
TOTAL CONCRETE (CY)				16.5			16.9			17.3			17.7	

BENT BAR DETAILS

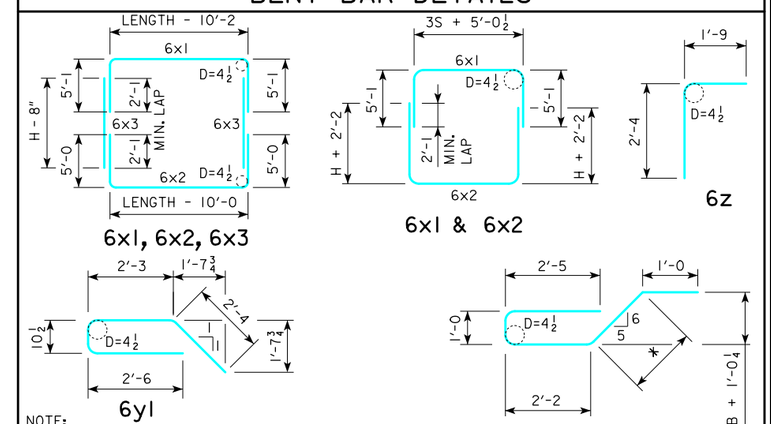

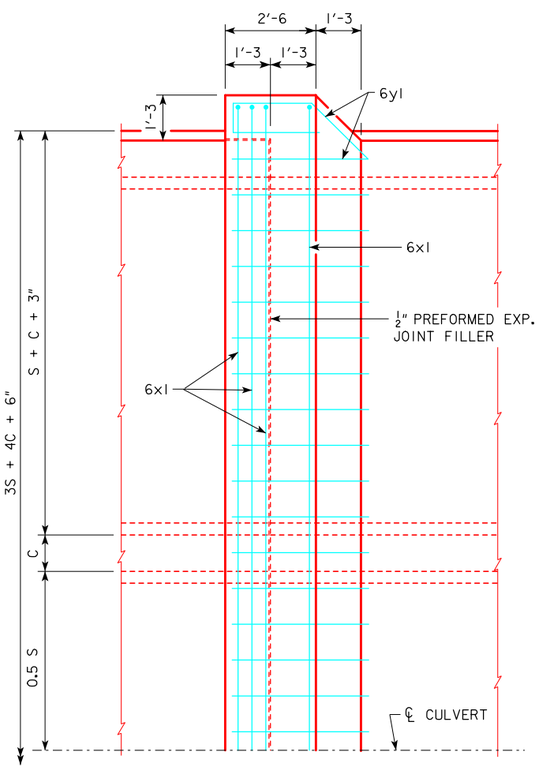

PLAN VIEW - SLAB

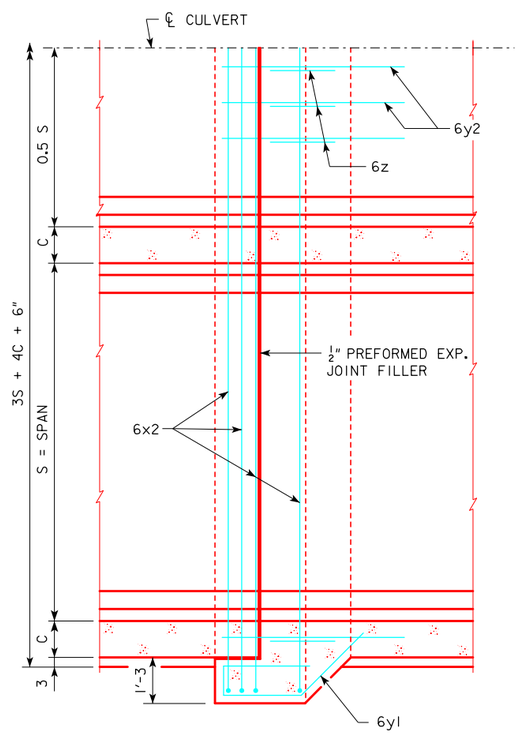

PLAN VIEW - FLOOR

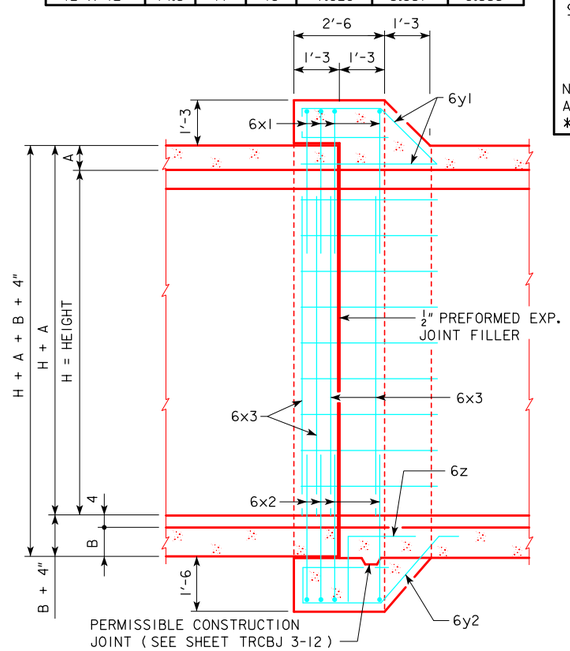

LONGITUDINAL SECTION

CONCRETE PLACEMENT

BARREL SIZE	BARREL DIMENSION			BELL JOINT QUANTITES (CY)		
	A	B	C	FOOTING	WALLS	SLAB
12' x 4'	14.5	16.5	9	7.588	1.047	6.345
12' x 5'	14.5	16.5	9	7.588	1.332	6.345
12' x 6'	14.5	16.5	9	7.588	1.618	6.345
12' x 7'	15	17	9	7.600	1.903	6.357
12' x 8'	15	17	9	7.600	2.189	6.357
12' x 9'	15	17	9.5	7.629	2.474	6.380
12' x 10'	14.5	17	10.5	7.686	2.760	6.416
12' x 11'	14.5	17	12	7.772	3.045	6.487
12' x 12'	14.5	17	13	7.829	3.331	6.535

NOTES:

1. DIMENSIONS AND QUANTITIES SHOWN ARE BASED ON SLAB, FLOOR, AND WALL THICKNESSES (A, B, AND C, RESPECTIVELY). VALUES FOR THESE DIMENSIONS, UNDER VARYING FILL CONDITIONS, CAN BE FOUND ON THE TRRCB CULVERT BARREL DETAIL SHEETS.
2. CHANGE LENGTHS OF BARS 6x1, 6x2, 6z, AND ADJUST REINFORCING STEEL AND CONCRETE QUANTITIES ACCORDINGLY FOR SLAB, WALL AND FLOOR THICKNESSES OTHER THAN SHOWN.
3. ALL BAR LENGTHS ARE ESTIMATED WITH A 2" CLEARANCE FROM CONCRETE EDGE TO OUTSIDE OF BAR, EXCEPT AS NOTED.
4. MATERIAL AND CONSTRUCTION TO BE IN ACCORDANCE WITH THE CURRENT STANDARD SPECIFICATIONS OF I.D.O.T.
5. SEE SHEET TRRCB GI-12 FOR GENERAL INFORMATION, SPECIFICATIONS AND DESIGN STRESSES.
6. BARS 6x1 & 6x2 MAY BE FURNISHED IN TWO EQUAL LENGTHS ADDING 2'-3 TO THE OVERALL LENGTH TO OBTAIN A 2'-3 MIN. LAP. THE ABOVE IS TO BE PERFORMED AT NO ADDITIONAL COST TO THE CONTRACTING AUTHORITY.
7. BARREL FLOOR BARS m1 & m9 ARE TO BE SHORTENED 6" IN LENGTH AT BELL JOINTS.

07-13
LATEST REVISION DATE

APPROVED BY BRIDGE ENGINEER

IOWA DOT Highway Division

STANDARD DESIGN

TRIPLE REINFORCED CONCRETE BOX CULVERTS

APRIL, 2012

CULVERT BELL JOINTS

12' SPAN

TRCBJ 2-12

REVISED 07-13 - THE m9 BARS WERE ADDED TO NOTE NUMBER 7.
ENGLISHLRFDSIGNEDTRIPLECULVERTS.DGN - TRCBJ 2-12 - THIS SHEET ISSUED 04-12.

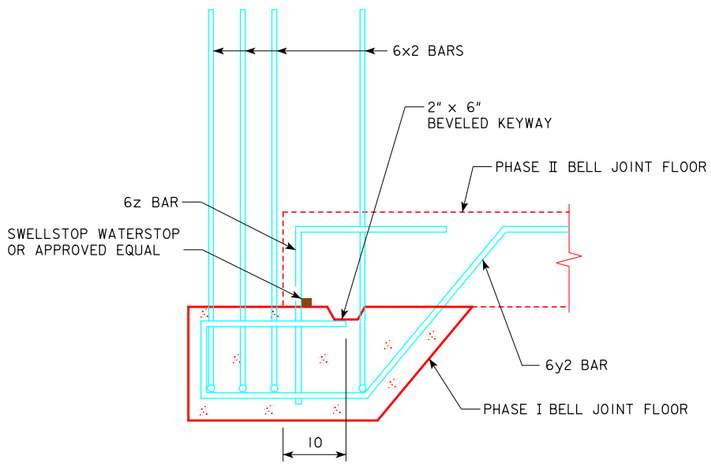

SECTION A-A

BELL JOINT AT FLOOR

COST FOR WATERSTOP CONSIDERED INCIDENTAL TO THE PROJECT.

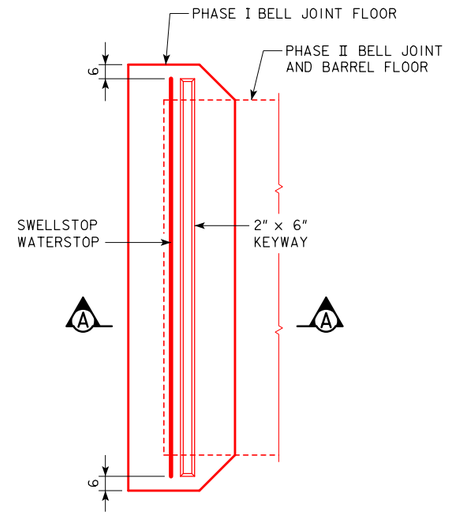

PLAN VIEW - PHASE I

(SHOWING PHASE I OF FLOOR BELL JOINT CONSTRUCTION)

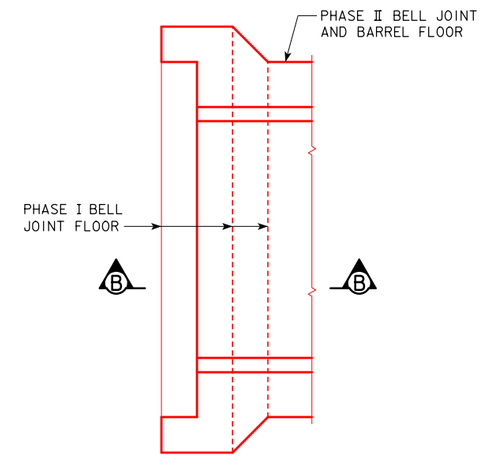

PLAN VIEW - PHASE II

(SHOWING PHASE II OF FLOOR BELL JOINT
AND BARREL FLOOR CONSTRUCTION)

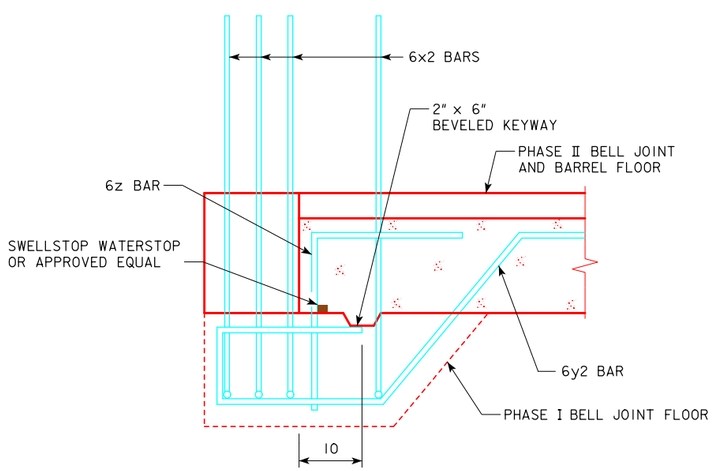

SECTION B-B

BELL JOINT AT FLOOR

COST FOR WATERSTOP CONSIDERED INCIDENTAL TO THE PROJECT.

NOTES:

1. THE DETAILS SHOWN ON THIS SHEET ARE AN OPTION FOR THE CONTRACTOR TO CONSTRUCT THE FLOOR OF THE BELL JOINT WITH A PERMISSIBLE CONSTRUCTION JOINT AS SHOWN.
2. REINFORCING STEEL WILL BE PLACED PRIOR TO PLACING THE PHASE I CONCRETE.
3. THE COST OF THE WATERSTOP IS CONSIDERED INCIDENTAL TO THE PROJECT.
4. A 2" x 6" BEVELED KEYWAY WILL BE FORMED TO THE DISTANCE SHOWN AND LOCATION NOTED BEFORE PLACING THE CONCRETE.
5. FOR DETAILS AND DIMENSIONS OF THE BELL JOINT REFER TO THE BELL JOINT STANDARD SHEETS.

LATEST REVISION DATE

APPROVED BY BRIDGE ENGINEER

IOWADOT Highway Division

STANDARD DESIGN

TRIPLE REINFORCED CONCRETE BOX CULVERTS

APRIL, 2012

CULVERT BELL JOINTS

ALL SPANS

TRCBJ 3-12

ENGLISHLRFDSIGNEDTRIPLECULVERTS.DGN - TRCBJ 3-12 - THIS SHEET ISSUED 04-12.