IOWA DOT
Highway Division

SINGLE PRECAST REINFORCED CONCRETE BOX CULVERT STANDARDS

GENERAL NOTES:

1. THE PRECAST RCB CULVERT SECTIONS ARE DESIGNED FOR HL-93 LIVE LOAD AND EARTH FILLS OF VARYING HEIGHTS.
2. VERTICAL EARTH PRESSURE, EV=0.120 kcf.
   HORIZONTAL EARTH PRESSURE, EHmax = 0.060 kcf MAX, EHmin = 0.030 kcf.
3. THE PRECAST RCB CULVERT SECTIONS ARE DESIGNED FOR CLASS 2 EXPOSURE CONDITIONS.
4. THE CLEAR DISTANCE FROM FACE OF CONCRETE TO NEAR EDGE OR END OF REINFORCING BAR TO BE $1\frac{1}{2}$" MIN. AND 2" MAX. UNLESS OTHERWISE NOTED.
5. THE REINFORCEMENT SUPPLIED FOR THIS STRUCTURE SHALL BE PLAIN AND/OR DEFORMED WELDED WIRE REINFORCEMENT (WWR) Fy = 65 ksi, AND/OR GRADE 60 REINFORCING STEEL IN ACCORDANCE WITH THE STANDARD SPECIFICATIONS. THE REINFORCEMENT AREAS ARE BASED ON WELDED WIRE REINFORCEMENT. IF REINFORCING BARS ARE SUBSTITUTED FOR WELDED WIRE REINFORCEMENT, THE REINFORCEMENT AREAS SHALL BE INCREASED BY 8%. THE BARREL SECTIONS IN THESE STANDARDS WERE DESIGNED WITH PLAIN WWR, Fy = 65 ksi.
6. ALL DIMENSIONS ARE IN FEET AND INCHES UNLESS OTHERWISE NOTED OR SHOWN.
7. ANY OF THE FOLLOWING COMBINATIONS OF REINFORCEMENT MAY BE USED:
   A. 1 OR 2 LAYERS OF WELDED WIRE REINFORCEMENT OR
   B. 1 LAYER OF WELDED WIRE REINFORCEMENT AND 1 LAYER OF REINFORCEMENT BARS OR
   C. 1 LAYER OF REINFORCEMENT BARS.

   THE REINFORCEMENT SHALL BE DEVELOPED IN ACCORDANCE WITH AASHTO LRFD SPECIFICATIONS.
8. THE MAXIMUM SIZE OF REINFORCEMENT BARS SHALL BE #6, EXCEPT FOR PARAPET REINFORCEMENT AS DETAILED.
9. THE MAXIMUM WELDED WIRE REINFORCEMENT SIZE SHALL BE A W23/D23 PER LAYER (MAXIMUM OF 2 LAYERS).
10. THE SPACING CENTER TO CENTER OF THE TRANSVERSE WIRES OR BARS SHALL NOT BE LESS THAN 2" NOR MORE THAN 4". THE SPACING CENTER TO CENTER OF THE LONGITUDINAL WIRES OR BARS SHALL NOT BE MORE THAN 8".
11. WELDING WILL NOT BE ALLOWED ON REINFORCEMENT BARS OR WELDED WIRE REINFORCEMENT, EXCEPT THAT THE ORIGINAL WELDING REQUIRED TO MANUFACTURE THE WIRE REINFORCEMENT IS ACCEPTABLE.
12. WHEN REINFORCEMENT IS CUT, ADDITIONAL REINFORCEMENT SHALL BE ADDED ON BOTH SIDES OF THE CUT MEMBER TO REPLACE OR EXCEED THE CUT REINFORCEMENT.
13. BOXCAR SOFTWARE VERSION 3.1 WAS USED FOR THE DESIGN OF THE BARREL SECTIONS FOR THESE STANDARDS.
14. THESE CULVERT STANDARDS LABEL ALL REINFORCING STEEL WITH ENGLISH NOTATION (#3 IS $\frac{3}{8}$ INCH DIAMETER BAR). ENGLISH REINFORCING STEEL RECEIVED AT THE PRECAST PLANT MAY DISPLAY THE FOLLOWING "BAR DESIGNATION". THE "BAR DESIGNATION" IS THE STAMPED IMPRESSION ON THE REINFORCING BARS, AND IS EQUIVALENT TO THE BAR DIAMETER IN MILLIMETERS.

ENGLISH SIZE	3	4	5	6	7	8	9	10	11
BAR DESIGNATION	10	13	16	19	22	25	29	32	36

15. THE FIRST PRECAST BARREL SECTION ADJACENT TO THE OUTLET PRECAST END SECTION MAY BE A DOUBLE GROOVE BARREL TO FACILITATE PLACEMENT OF OUTLET END SECTIONS AND ALLOW INLET AND OUTLET END SECTIONS TO BE SIMILAR.

INDEX FOR PRECAST CULVERT STANDARDS:

PRCB G1-13	INDEX & GENERAL NOTES
PRCB G2-13	TYPICAL CULVERT BARREL DETAILS
PRCB 6-13	CULVERT BARREL DETAILS, 6' SPANS
PRCB 8-13	CULVERT BARREL DETAILS, 8' SPANS
PRCB 10-13	CULVERT BARREL DETAILS, 10' SPANS
PRCB 12-13	CULVERT BARREL DETAILS, 12' SPANS
PES 1-13-T1	TYPE 1 END SECTION DETAILS, UP TO 7.5° SKEWS
PES 1-13-T3	TYPE 3 END SECTION DETAILS, UP TO 7.5° SKEWS
PES 2-13-T3	TYPE 3 END SECTION DETAILS, 7.5° TO 45° SKEWS
PES 3-13-T3	TYPE 3 LINTEL BEAM DETAILS, 0° TO 45° SKEWS
PES 4-13	ALTERNATE CURTAIN WALL DETAILS
PEP 1-13	EMBANKMENT PROTECTION DETAILS, 0° TO 45° SKEWS

SPECIFICATIONS:

DESIGN:
AASHTO LRFD BRIDGE DESIGN SPECIFICATIONS, 5TH ED., SERIES OF 2010.

CONSTRUCTION:
IOWA DEPARTMENT OF TRANSPORTATION STANDARD SPECIFICATIONS FOR HIGHWAY AND BRIDGE CONSTRUCTION, CURRENT SERIES, PLUS APPLICABLE GENERAL SUPPLEMENTAL SPECIFICATIONS, DEVELOPMENTAL SPECIFICATIONS, SUPPLEMENTAL SPECIFICATIONS AND SPECIAL PROVISIONS.

DESIGN STRESSES:

DESIGN STRESSES FOR THE FOLLOWING MATERIALS ARE IN ACCORDANCE WITH THE AASHTO LRFD BRIDGE DESIGN SPECIFICATIONS, 5TH ED., SERIES OF 2010:
BAR REINFORCEMENT IN ACCORDANCE WITH AASHTO LRFD SECTION 5, GRADE 60.
WELDED WIRE REINFORCEMENT IN ACCORDANCE WITH AASHTO LRFD SECTION 5.
CONCRETE IN ACCORDANCE WITH AASHTO LRFD SECTION 5, f'c FOR BARREL SECTIONS AS NOTED ON CULVERT BARREL DETAIL STANDARDS, FOR END SECTION DESIGN f'c = 5 ksi.

REVISED 07-2016 - ADDED THE DESIGN VERTICAL AND HORIZONTAL EARTH PRESSURES AND RENUMBERED THE GENERAL NOTES.
ENGLISHSIGNEDPRECASTCULVERTS.DGN - PRCB G1-13 - THIS SHEET ISSUED 01-13.

07-2016
LATEST REVISION DATE

APPROVED BY BRIDGE ENGINEER

IOWA DOT Highway Division

STANDARD DESIGN
SINGLE PRECAST REINFORCED CONCRETE BOX CULVERTS
JANUARY, 2013

INDEX AND GENERAL NOTES

PRCB G1-13

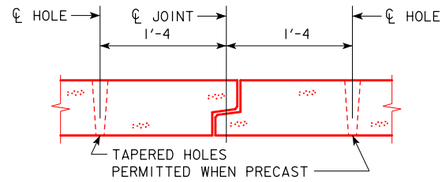

TYPICAL TIE LAYOUT

NOTE:
HOLES SHALL BE CAST OR DRILLED 1'-4 FROM CENTERLINE OF JOINTS AS SHOWN ABOVE, UNLESS FORMS ARE SET UP FOR 1'-4 SPACING FROM OUTSIDE OF JOINT.

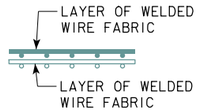

FABRIC LAYER DETAIL

NOTE:
WHEN MORE THAN ONE LAYER OF WELDED WIRE FABRIC IS USED TO OBTAIN THE REQUIRED REINFORCEMENT AREAS, THE WIRES OF THE WELDED WIRE FABRIC SHALL BE PLACED AS SHOWN.

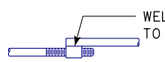

TOP VIEW

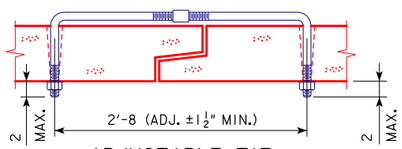

ADJUSTABLE TIE

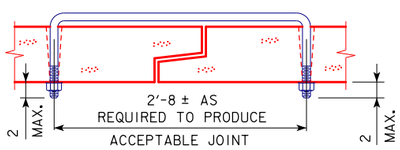

U BOLT TIE ⑥

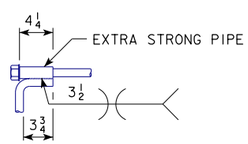

DETAIL "A"

OPTIONAL
CANOPY TIE

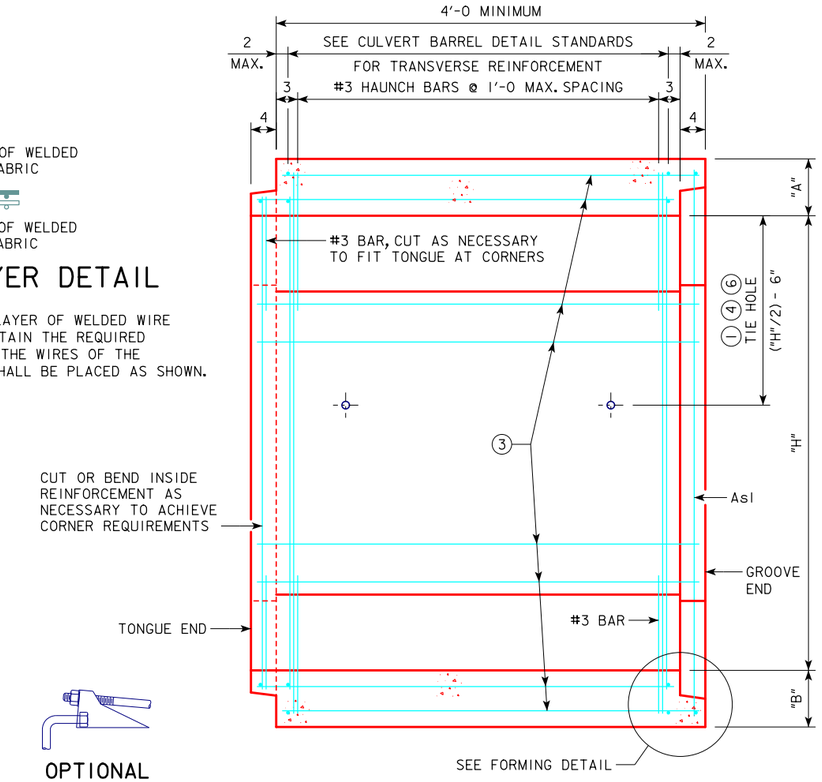

LONGITUDINAL BARREL SECTION

(REINFORCEMENT BAR OPTION SHOWN)

* THE CONNECTIONS SHALL BE PLACED AT THE DOWNSTREAM END WHEN THE CONNECTIONS ARE PLACED INSIDE OF STRUCTURE.

NOTES:

1. CULVERT TIES ARE TO BE 1"Φ RODS. SEE THIS SHEET FOR CONNECTION DETAILS.
2. HAUNCH SIZES ARE TO BE 12" VERTICAL, 12" HORIZONTAL ON ALL BOX SIZES.
3. LONGITUDINAL REINFORCEMENT DENOTED AS As5 & As6 MUST BE PLACED IN SLAB, FLOOR, AND WALLS AND MUST BE 0.06 IN^2/FT. MIN.
4. REFER TO APPLICABLE END SECTION DETAIL SHEET FOR BARREL TO END SECTION CONNECTION TIE HOLE LOCATIONS.
5. OPTIONAL SQUARED CORNERS WITH ¾" TO 2" CHAMFER.
6. U BOLT TIES ARE REQUIRED FOR BIKE, PEDESTRIAN AND CATTLE PATHS WITH NUTS ON FILL SIDE.

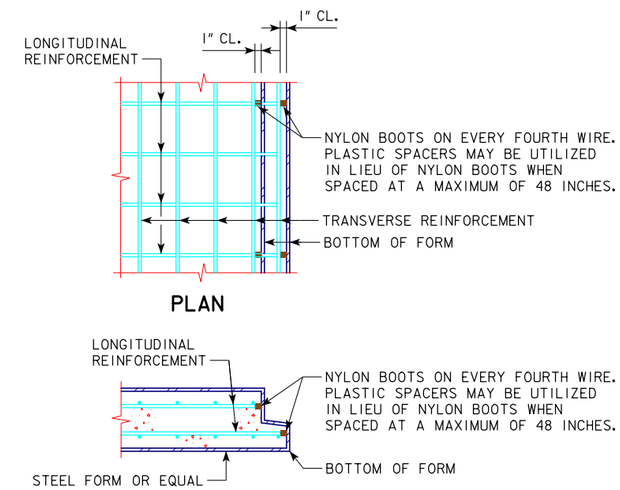

FORMING DETAIL

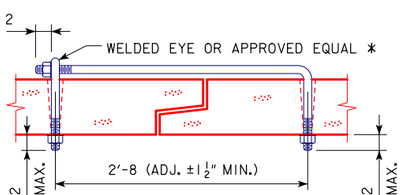

EYE BOLT TIE

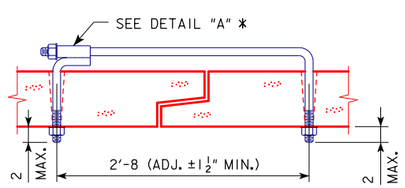

WELDED PIPE TIE

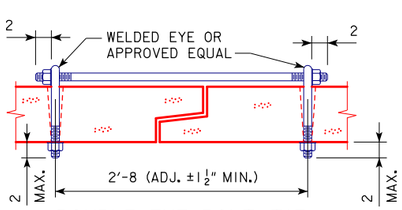

DOUBLE EYE BOLT TIE

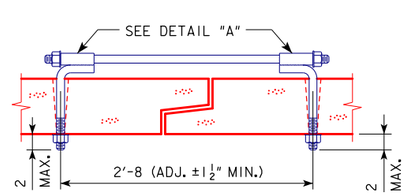

DOUBLE WELDED PIPE TIE

APPROVED CONCRETE BOX TIES

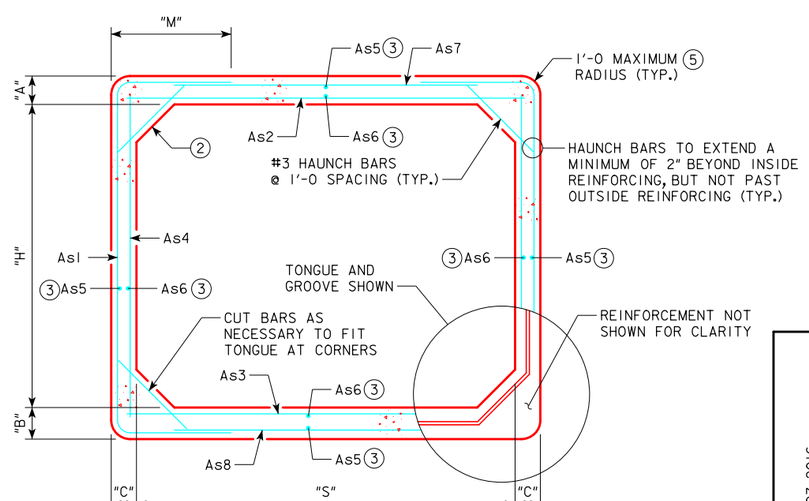

TRANSVERSE BARREL SECTION

(REINFORCEMENT BAR OPTION SHOWN)

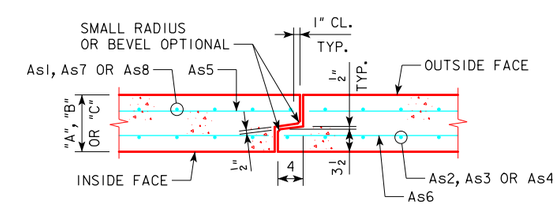

TONGUE AND GROOVE JOINT DETAIL

07-2016
LATEST REVISION DATE

APPROVED BY BRIDGE ENGINEER

IOWA DOT Highway Division

STANDARD DESIGN

SINGLE PRECAST REINFORCED CONCRETE BOX CULVERTS

JANUARY, 2013

TYPICAL CULVERT BARREL DETAILS

PRCB G2-13

REVISED 07-2016 - CORRECTED TYPOS.
ENGLISHSIGNEDPRECASTCULVERTS.DGN - PRCB G2-13 - THIS SHEET ISSUED 01-13.

VARIABLE DIMENSIONS AND QUANTITIES FOR 6′ SPAN BARREL SECTIONS

DIMENSIONS									REINFORCEMENT REQUIREMENTS (IN^2/FT)											WEIGHT (LB/FT)
									As1			As2		As3		As4		As7/As8		
SIZE	CLASS	f′c (ksi)	FILL	S	H	A	B	C	AREA	LENGTH	M	AREA	LENGTH	AREA	LENGTH	AREA	LENGTH	AREA	LENGTH	
6x3	1	5.0	2-10	6	3	8	8	8	0.36	9′-2	2′-8	0.29	6′-6	0.27	6′-6	0.20	3′-6	0.20	3′-8	2370
	2	5.0	11-19	6	3	8	8	8	0.48	9′-2	2′-8	0.40	6′-6	0.40	6′-6	0.20	3′-6	0.20	3′-8	2370
	3	5.0	20-25	6	3	8	8	8	0.61	9′-2	2′-8	0.50	6′-6	0.50	6′-6	0.20	3′-6	0.20	3′-8	2370
6x4	1	5.0	2-11	6	4	8	8	8	0.31	10′-2	2′-8	0.35	6′-6	0.33	6′-6	0.20	4′-6	0.20	3′-8	2570
	2	5.0	12-19	6	4	8	8	8	0.41	10′-2	2′-8	0.47	6′-6	0.48	6′-6	0.20	4′-6	0.20	3′-8	2570
	3	5.0	20-25	6	4	8	8	8	0.52	10′-2	2′-8	0.59	6′-6	0.60	6′-6	0.20	4′-6	0.20	3′-8	2570
6x5	1	5.0	2-12	6	5	8	8	8	0.28	11′-2	2′-8	0.39	6′-6	0.38	6′-6	0.20	5′-6	0.20	3′-8	2770
	2	5.0	13-19	6	5	8	8	8	0.36	11′-2	2′-8	0.51	6′-6	0.53	6′-6	0.20	5′-6	0.20	3′-8	2770
	3	5.0	20-25	6	5	8	8	8	0.46	11′-2	2′-8	0.65	6′-6	0.66	6′-6	0.20	5′-6	0.20	3′-8	2770
6x6	1	5.0	2-12	6	6	8	8	8	0.26	12′-2	2′-8	0.43	6′-6	0.42	6′-6	0.20	6′-6	0.20	3′-8	2970
	2	5.0	13-19	6	6	8	8	8	0.33	12′-2	2′-8	0.54	6′-6	0.56	6′-6	0.20	6′-6	0.20	3′-8	2970
	3	5.0	20-25	6	6	8	8	8	0.41	12′-2	2′-8	0.68	6′-6	0.70	6′-6	0.20	6′-6	0.20	3′-8	2970
6x7	1	5.0	2-13	6	7	8	8	8	0.24	13′-2	2′-8	0.46	6′-6	0.46	6′-6	0.20	7′-6	0.20	3′-8	3170
	2	5.0	14-19	6	7	8	8	8	0.30	13′-2	2′-8	0.55	6′-6	0.58	6′-6	0.20	7′-6	0.20	3′-8	3170
	3	5.0	20-25	6	7	8	8	8	0.38	13′-2	2′-8	0.68	6′-6	0.71	6′-6	0.20	7′-6	0.20	3′-8	3170
6x8	1	5.0	2-13	6	8	8	8	8	0.23	14′-2	2′-8	0.49	6′-6	0.50	6′-6	0.20	8′-6	0.20	3′-8	3370
	2	5.0	14-19	6	8	8	8	8	0.29	14′-2	2′-8	0.55	6′-6	0.59	6′-6	0.21	8′-6	0.20	3′-8	3370
	3	5.0	20-25	6	8	8	8	8	0.36	14′-10	3′-0	0.68	6′-6	0.72	6′-6	0.25	8′-6	0.20	3′-0	3370

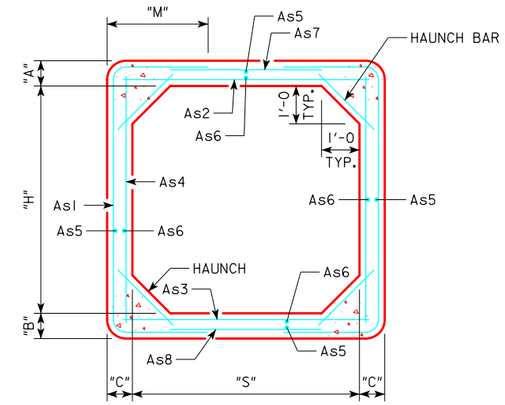

TYPICAL BARREL SECTION

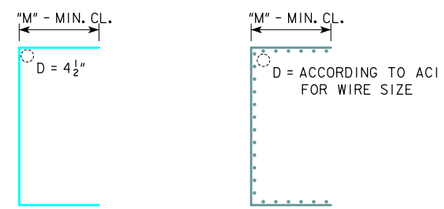

REINFORCEMENT BARS

WELDED WIRE REINFORCEMENT

BENT BAR DETAILS

ALL DIMENSIONS ARE OUT TO OUT.
D = PIN DIAMETER (MIN.).
PIN DIAMETER MAY BE INCREASED IF NEEDED TO MAINTAIN CLEAR COVER.

NOTES:

1. DIMENSIONS "A", "B" & "C" LISTED IN THE BAR LIST ARE IN INCHES.
2. LONGITUDINAL REINFORCEMENT DENOTED AS As5 AND As6 MUST BE PLACED IN SLAB, FLOOR, AND WALLS AND MUST BE 0.06 IN^2/FT MINIMUM.
3. ALL REINFORCEMENT LENGTHS AND AREAS ARE MINIMUM REQUIREMENTS.
4. IF REINFORCING BARS ARE SUBSTITUTED FOR WELDED WIRE REINFORCING, DIMENSION "M" AND/OR LENGTH OF THE As7/As8 REINFORCEMENT SHALL BE ADJUSTED TO ENSURE ADEQUATE LAP LENGTH IS PROVIDED.
5. WEIGHT OF SECTIONS ASSUMES A DENSITY OF 150 PCF AND SQUARED CORNERS.
6. SEE PRCB G1-13 AND G2-13 FOR ADDITIONAL INFORMATION AND NOTES.

LATEST REVISION DATE

APPROVED BY BRIDGE ENGINEER

IOWA DOT Highway Division

STANDARD DESIGN

SINGLE PRECAST REINFORCED CONCRETE BOX CULVERTS

JANUARY, 2013

CULVERT BARREL DETAILS

6′ SPAN BARREL SECTIONS

PRCB 6-13

ENGLISHSIGNEDPRECASTCULVERTS.DGN - PRCB 6-13 - THIS SHEET ISSUED 01-13.

VARIABLE DIMENSIONS AND QUANTITIES FOR 8′ SPAN BARREL SECTIONS

DIMENSIONS									REINFORCEMENT REQUIREMENTS (IN^2/FT)											WEIGHT (LB/FT)
									As1			As2		As3		As4		As7/As8		
SIZE	CLASS	f′c (ksi)	FILL	S	H	A	B	C	AREA	LENGTH	M	AREA	LENGTH	AREA	LENGTH	AREA	LENGTH	AREA	LENGTH	
8x4	1	5.0	2-9	8	4	9	10	8	0.47	10′-9	2′-10	0.42	8′-6	0.40	8′-6	0.20	4′-6	0.24	5′-4	3320
	2	5.0	10-19	8	4	9	10	8	0.65	10′-9	2′-10	0.66	8′-6	0.67	8′-6	0.20	4′-6	0.24	5′-4	3320
	3	5.0	20-25	8	4	9	10	8	0.85	10′-9	2′-10	0.83	8′-6	0.85	8′-6	0.20	4′-6	0.24	5′-4	3320
8x5	1	5.0	2-9	8	5	9	10	8	0.41	11′-9	2′-10	0.46	8′-6	0.46	8′-6	0.20	5′-6	0.24	5′-4	3520
	2	5.0	10-19	8	5	9	10	8	0.57	11′-9	2′-10	0.72	8′-6	0.74	8′-6	0.20	5′-6	0.24	5′-4	3520
	3	5.0	20-25	8	5	9	10	8	0.74	11′-9	2′-10	0.91	8′-6	0.94	8′-6	0.20	5′-6	0.24	5′-4	3520
8x6	1	5.0	2-9	8	6	9	10	8	0.37	12′-9	2′-10	0.50	8′-6	0.50	8′-6	0.20	6′-6	0.24	5′-4	3720
	2	5.0	10-19	8	6	9	10	8	0.51	12′-9	2′-10	0.76	8′-6	0.79	8′-6	0.20	6′-6	0.24	5′-4	3720
	3	5.0	20-25	8	6	9	10	8	0.66	12′-9	2′-10	0.96	8′-6	0.99	8′-6	0.20	6′-6	0.24	5′-4	3720
8x7	1	5.0	2-10	8	7	9	10	8	0.34	13′-9	2′-10	0.53	8′-6	0.54	8′-6	0.20	7′-6	0.24	5′-4	3920
	2	5.0	11-19	8	7	9	10	8	0.47	13′-9	2′-10	0.79	8′-6	0.82	8′-6	0.20	7′-6	0.24	5′-4	3920
	3	5.0	20-25	8	7	9	10	8	0.60	13′-9	2′-10	1.00	8′-6	1.02	8′-6	0.20	7′-6	0.24	5′-4	3920
8x8	1	5.0	2-10	8	8	9	10	8	0.31	14′-9	2′-10	0.56	8′-6	0.57	8′-6	0.20	8′-6	0.24	5′-4	4120
	2	5.0	11-19	8	8	9	10	8	0.43	14′-9	2′-10	0.81	8′-6	0.84	8′-6	0.20	8′-6	0.24	5′-4	4120
	3	5.0	20-25	8	8	9	10	8	0.56	14′-9	2′-10	1.01	8′-6	1.04	8′-6	0.20	8′-6	0.24	5′-4	4120
8x9	1	5.0	2-11	8	9	9	10	8	0.30	15′-9	2′-10	0.59	8′-6	0.60	8′-6	0.20	9′-6	0.24	5′-4	4320
	2	5.0	12-19	8	9	9	10	8	0.42	16′-1	3′-0	0.81	8′-6	0.85	8′-6	0.22	9′-6	0.24	5′-0	4320
	3	5.0	20-25	8	9	9	10	8	0.54	16′-5	3′-2	1.01	8′-6	1.05	8′-6	0.26	9′-6	0.24	5′-0	4320
8x10	1	5.0	2-11	8	10	9	10	8	0.31	17′-1	3′-0	0.61	8′-6	0.63	8′-6	0.25	10′-6	0.24	5′-0	4520
	2	5.0	12-20	8	10	9	10	8	0.48	17′-1	3′-0	0.84	8′-6	0.88	8′-6	0.34	10′-6	0.24	5′-0	4520
	3	5.0	21-25	8	10	9	10	9	0.51	17′-5	3′-2	0.94	8′-6	0.99	8′-6	0.34	10′-6	0.24	5′-0	4810

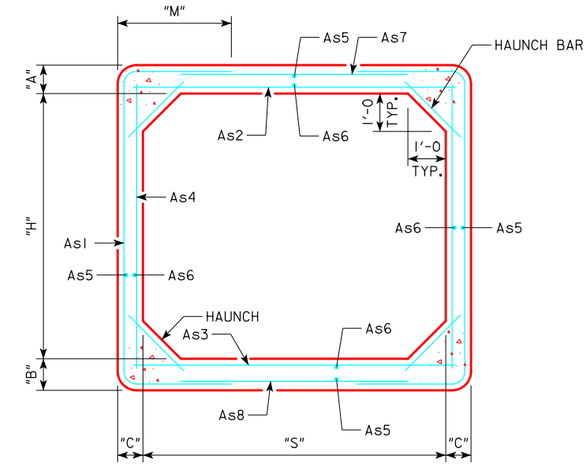

TYPICAL BARREL SECTION

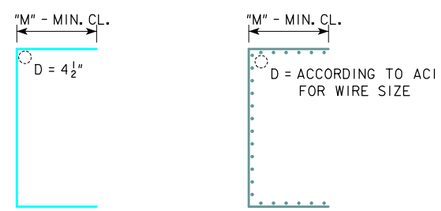

REINFORCEMENT BARS

WELDED WIRE REINFORCEMENT

BENT BAR DETAILS

ALL DIMENSIONS ARE OUT TO OUT.
D = PIN DIAMETER (MIN.).
PIN DIAMETER MAY BE INCREASED IF NEEDED TO MAINTAIN CLEAR COVER.

NOTES:

1. DIMENSIONS "A", "B" & "C" LISTED IN THE BAR LIST ARE IN INCHES.
2. LONGITUDINAL REINFORCEMENT DENOTED AS As5 AND As6 MUST BE PLACED IN SLAB, FLOOR, AND WALLS AND MUST BE 0.06 IN^2/FT MINIMUM.
3. ALL REINFORCEMENT LENGTHS AND AREAS ARE MINIMUM REQUIREMENTS.
4. IF REINFORCING BARS ARE SUBSTITUTED FOR WELDED WIRE REINFORCING, DIMENSION "M" AND/OR LENGTH OF THE As7/As8 REINFORCEMENT SHALL BE ADJUSTED TO ENSURE ADEQUATE LAP LENGTH IS PROVIDED.
5. WEIGHT OF SECTIONS ASSUMES A DENSITY OF 150 PCF AND SQUARED CORNERS.
6. SEE PRCB G1-13 AND G2-13 FOR ADDITIONAL INFORMATION AND NOTES.

LATEST REVISION DATE

APPROVED BY BRIDGE ENGINEER

IOWADOT Highway Division

STANDARD DESIGN

SINGLE PRECAST REINFORCED CONCRETE BOX CULVERTS

JANUARY, 2013

CULVERT BARREL DETAILS

8′ SPAN BARREL SECTIONS

PRCB 8-13

ENGLISHSIGNEDPRECASTCULVERTS.DGN - PRCB 8-13 - THIS SHEET ISSUED 01-13.

VARIABLE DIMENSIONS AND QUANTITIES FOR 10' SPAN BARREL SECTIONS

DIMENSIONS									REINFORCEMENT REQUIREMENTS (IN^2/FT)											WEIGHT (LB/FT)
									As1			As2		As3		As4		As7/As8		
SIZE	CLASS	f'c (ksi)	FILL	S	H	A	B	C	AREA	LENGTH	M	AREA	LENGTH	AREA	LENGTH	AREA	LENGTH	AREA	LENGTH	
10x4	1	5.0	2-11	10	4	9	10	8	0.72	10'-9	2'-10	0.62	10'-6	0.63	10'-6	0.20	4'-6	0.24	7'-4	3795
	2	5.0	12-21	10	4	9	10	8	1.24	13'-9	4'-4	1.04	10'-6	1.05	10'-6	0.20	4'-6	0.24	7'-0	3795
	3	5.0	22-25	10	4	10	11	9	1.23	12'-1	3'-5	1.03	10'-6	1.07	10'-6	0.22	4'-6	0.27	9'-0	4220
10x5	1	5.0	2-11	10	5	9	10	8	0.64	11'-9	2'-10	0.69	10'-6	0.71	10'-6	0.20	5'-6	0.24	7'-4	3995
	2	5.0	12-22	10	5	9	10	8	1.15	12'-5	3'-2	1.20	10'-6	1.21	10'-6	0.20	5'-6	0.24	9'-0	3995
	3	5.0	23-25	10	5	10	11	9	1.09	12'-7	3'-2	1.13	10'-6	1.19	10'-6	0.22	5'-6	0.27	9'-0	4445
10x6	1	5.0	2-11	10	6	9	10	8	0.58	12'-9	2'-10	0.74	10'-6	0.76	10'-6	0.20	6'-6	0.24	7'-4	4195
	2	5.0	12-22	10	6	9	10	8	1.03	13'-1	3'-0	1.28	10'-6	1.30	10'-6	0.20	6'-6	0.24	9'-0	4195
	3	5.0	23-25	10	6	10	11	9	0.98	13'-3	3'-0	1.21	10'-6	1.27	10'-6	0.22	6'-6	0.27	9'-0	4670
10x7	1	5.0	2-11	10	7	9	10	8	0.54	13'-9	2'-10	0.78	10'-6	0.81	10'-6	0.20	7'-6	0.24	7'-4	4395
	2	5.0	12-22	10	7	9	10	8	0.94	13'-9	2'-10	1.34	10'-6	1.36	10'-6	0.20	7'-6	0.24	9'-0	4395
	3	5.0	23-25	10	7	10	11	9	0.90	13'-11	2'-10	1.26	10'-6	1.34	10'-6	0.22	7'-6	0.27	9'-0	4895
10x8	1	5.0	2-10	10	8	9	10	8	0.50	14'-9	2'-10	0.76	10'-6	0.80	10'-6	0.20	8'-6	0.24	7'-4	4595
	2	5.0	11-21	10	8	9	10	8	0.83	14'-9	2'-10	1.33	10'-6	1.36	10'-6	0.20	8'-6	0.24	9'-0	4595
	3	5.0	22-25	10	8	10	11	8	0.83	14'-11	2'-10	1.41	10'-6	1.50	10'-6	0.20	8'-6	0.27	9'-0	4875
10x9	1	5.0	2-11	10	9	9	10	8	0.46	15'-9	2'-10	0.83	10'-6	0.88	10'-6	0.20	9'-6	0.24	7'-4	4795
	2	5.0	12-21	10	9	9	10	8	0.78	17'-1	3'-6	1.35	10'-6	1.39	10'-6	0.20	9'-6	0.24	7'-0	4795
	3	5.0	22-25	10	9	10	11	8	0.79	15'-11	2'-10	1.43	10'-6	1.52	10'-6	0.20	9'-6	0.27	9'-0	5075
10x10	1	5.0	2-11	10	10	9	10	8	0.46	17'-1	3'-0	0.85	10'-6	0.91	10'-6	0.20	10'-6	0.24	7'-0	4995
	2	5.0	12-21	10	10	9	10	8	0.76	18'-1	3'-6	1.37	10'-6	1.41	10'-6	0.24	10'-6	0.24	7'-0	4995
	3	5.0	22-25	10	10	10	11	9	0.75	18'-5	3'-7	1.35	10'-6	1.43	10'-6	0.22	10'-6	0.27	7'-0	5570
10x11	1	5.0	2-9	10	11	9	10	8	0.46	18'-1	3'-0	0.85	10'-6	0.85	10'-6	0.28	11'-6	0.24	7'-0	5195
	2	5.0	10-16	10	11	9	10	8	0.63	19'-9	3'-10	1.12	10'-6	1.17	10'-6	0.34	11'-6	0.24	5'-10	5195
	3	5.0	17-20	10	11	9	10	9	0.68	20'-1	4'-0	1.24	10'-6	1.29	10'-6	0.32	11'-6	0.24	5'-10	5510
	4	5.0	21-25	10	11	10	11	11	0.72	19'-7	3'-8	1.19	10'-6	1.28	10'-6	0.27	11'-6	0.27	7'-0	6435
10x12	1	5.0	2-12	10	12	9	10	8	0.54	21'-3	4'-1	0.93	10'-6	1.00	10'-6	0.41	12'-6	0.24	5'-2	5395
	2	5.0	13-19	10	12	9	10	10	0.61	21'-7	4'-3	1.12	10'-6	1.18	10'-6	0.39	12'-6	0.24	5'-4	6075
	3	5.0	20-25	10	12	10	11	12	0.69	22'-1	4'-5	1.12	10'-6	1.22	10'-6	0.36	12'-6	0.27	5'-8	7050

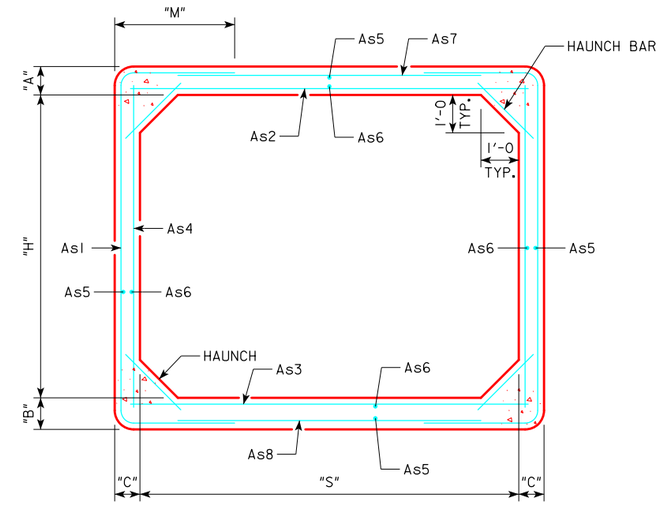

TYPICAL BARREL SECTION

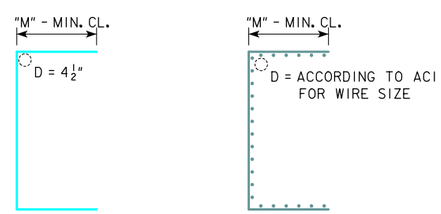

REINFORCEMENT BARS

WELDED WIRE REINFORCEMENT

BENT BAR DETAILS

ALL DIMENSIONS ARE OUT TO OUT.
D = PIN DIAMETER (MIN.).
PIN DIAMETER MAY BE INCREASED IF NEEDED TO MAINTAIN CLEAR COVER.

NOTES:

1. DIMENSIONS "A", "B" & "C" LISTED IN THE BAR LIST ARE IN INCHES.
2. LONGITUDINAL REINFORCEMENT DENOTED AS As5 AND As6 MUST BE PLACED IN SLAB, FLOOR, AND WALLS AND MUST BE 0.06 IN^2/FT MINIMUM.
3. ALL REINFORCEMENT LENGTHS AND AREAS ARE MINIMUM REQUIREMENTS.
4. IF REINFORCING BARS ARE SUBSTITUTED FOR WELDED WIRE REINFORCING, DIMENSION "M" AND/OR LENGTH OF THE As7/As8 REINFORCEMENT SHALL BE ADJUSTED TO ENSURE ADEQUATE LAP LENGTH IS PROVIDED.
5. WEIGHT OF SECTIONS ASSUMES A DENSITY OF 150 PCF AND SQUARED CORNERS.
6. SEE PRCB G1-13 AND G2-13 FOR ADDITIONAL INFORMATION AND NOTES.

LATEST REVISION DATE

APPROVED BY BRIDGE ENGINEER

IOWA DOT Highway Division

STANDARD DESIGN

SINGLE PRECAST REINFORCED CONCRETE BOX CULVERTS

JANUARY, 2013

CULVERT BARREL DETAILS

10' SPAN BARREL SECTIONS

PRCB 10-13

ENGLISHSIGNEDPRECASTCULVERTS.DGN - PRCB 10-13 - THIS SHEET ISSUED 01-13.

VARIABLE DIMENSIONS AND QUANTITIES FOR 12′ SPAN BARREL SECTIONS

DIMENSIONS									REINFORCEMENT REQUIREMENTS (IN^2/FT)											WEIGHT (LB/FT)
									As1			As2		As3		As4		As7/As8		
SIZE	CLASS	f′c (ksi)	FILL	S	H	A	B	C	AREA	LENGTH	M	AREA	LENGTH	AREA	LENGTH	AREA	LENGTH	AREA	LENGTH	
12x4	1	5.0	2-9	12	4	9	10	8	0.98	12′-11	3′-11	0.74	12′-6	0.74	12′-6	0.20	4′-6	0.24	9′-0	4270
	2	5.0	10-15	12	4	9	10	9	1.27	15′-1	5′-0	0.98	12′-6	0.96	12′-6	0.22	4′-6	0.24	7′-10	4410
	3	5.0	16-19	12	4	11	11	9	1.39	14′-8	4′-8	1.11	12′-6	1.12	12′-6	0.22	4′-6	0.27	9′-0	4915
	4	6.0	20-25	12	4	12	12	10	1.54	15′-0	4′-9	1.26	12′-6	1.27	12′-6	0.24	4′-6	0.29	9′-0	5400
12x5	1	5.0	2-10	12	5	9	10	8	0.94	13′-9	3′-10	0.88	12′-6	0.89	12′-6	0.20	5′-6	0.24	9′-0	4470
	2	5.0	11-15	12	5	9	10	9	1.16	14′-7	4′-3	1.07	12′-6	1.07	12′-6	0.22	5′-6	0.24	9′-0	4635
	3	5.0	16-21	12	5	11	11	9	1.35	13′-6	3′-7	1.33	12′-6	1.35	12′-6	0.22	5′-6	0.27	11′-0	5140
	4	6.0	22-25	12	5	12	12	9	1.38	13′-4	3′-5	1.53	12′-6	1.55	12′-6	0.22	5′-6	0.29	11′-0	5475
12x6	1	5.0	2-10	12	6	9	10	8	0.84	14′-5	3′-8	0.95	12′-6	0.97	12′-6	0.20	6′-6	0.24	9′-0	4670
	2	5.0	11-15	12	6	9	10	8	1.15	15′-5	4′-2	1.27	12′-6	1.28	12′-6	0.20	6′-6	0.24	9′-0	4670
	3	5.0	16-19	12	6	10	11	9	1.19	15′-11	4′-4	1.30	12′-6	1.36	12′-6	0.22	6′-6	0.27	9′-0	5195
	4	6.0	20-25	12	6	12	12	9	1.22	13′-10	3′-2	1.63	12′-6	1.65	12′-6	0.22	6′-6	0.29	11′-0	5700
12x7	1	5.0	2-10	12	7	9	10	8	0.77	15′-1	3′-6	1.00	12′-6	1.03	12′-6	0.20	7′-6	0.24	9′-0	4870
	2	5.0	11-15	12	7	9	10	8	1.05	16′-1	4′-0	1.34	12′-6	1.36	12′-6	0.20	7′-6	0.24	9′-0	4870
	3	5.0	16-20	12	7	10	11	8	1.18	14′-9	3′-3	1.63	12′-6	1.67	12′-6	0.20	7′-6	0.27	11′-0	5200
	4	6.0	21-25	12	7	12	12	9	1.10	14′-6	3′-0	1.70	12′-6	1.73	12′-6	0.22	7′-6	0.29	11′-0	5925
12x8	1	5.0	2-11	12	8	9	10	8	0.76	16′-1	3′-6	1.11	12′-6	1.15	12′-6	0.20	8′-6	0.24	9′-0	5070
	2	5.0	12-18	12	8	10	10	8	1.04	15′-2	3′-0	1.60	12′-6	1.65	12′-6	0.20	8′-6	0.24	11′-0	5235
	3	5.0	19-21	12	8	11	11	9	1.02	15′-4	3′-0	1.56	12′-6	1.61	12′-6	0.22	8′-6	0.27	11′-0	5815
	4	6.0	22-25	12	8	12	12	9	1.01	15′-2	2′-10	1.75	12′-6	1.79	12′-6	0.22	8′-6	0.29	11′-0	6150
12x9	1	5.0	2-10	12	9	9	10	8	0.67	16′-9	3′-4	1.09	12′-6	1.13	12′-6	0.20	9′-6	0.24	9′-0	5270
	2	5.0	11-15	12	9	9	10	8	0.91	17′-7	3′-9	1.44	12′-6	1.54	12′-6	0.20	9′-6	0.24	9′-0	5270
	3	5.0	16-20	12	9	10	11	9	1.00	18′-3	4′-0	1.60	12′-6	1.64	12′-6	0.22	9′-6	0.27	9′-0	5870
	4	6.0	21-25	12	9	12	12	9	0.94	16′-2	2′-10	1.78	12′-6	1.84	12′-6	0.22	9′-6	0.29	11′-0	6375
12x10	1	5.0	2-11	12	10	9	10	8	0.66	17′-9	3′-4	1.18	12′-6	1.24	12′-6	0.20	10′-6	0.24	9′-0	5470
	2	5.0	12-17	12	10	10	10	8	0.87	18′-6	3′-8	1.60	12′-6	1.68	12′-6	0.20	10′-6	0.24	9′-0	5635
	3	5.0	18-20	12	10	11	11	9	0.86	18′-10	3′-9	1.57	12′-6	1.64	12′-6	0.22	10′-6	0.27	9′-0	6265
	4	6.0	21-25	12	10	12	12	9	0.92	17′-2	2′-10	1.80	12′-6	1.87	12′-6	0.22	10′-6	0.29	11′-0	6600
12x11	1	5.0	2-11	12	11	9	10	8	0.67	18′-9	3′-4	1.21	12′-6	1.27	12′-6	0.23	11′-6	0.24	9′-0	5670
	2	5.0	12-15	12	11	10	10	8	0.80	19′-4	3′-7	1.42	12′-6	1.57	12′-6	0.23	11′-6	0.24	9′-0	5835
	3	5.0	16-20	12	11	11	11	10	0.85	20′-0	3′-10	1.49	12′-6	1.57	12′-6	0.24	11′-6	0.27	9′-0	6810
	4	6.0	21-25	12	11	12	12	10	0.90	20′-0	3′-9	1.71	12′-6	1.79	12′-6	0.24	11′-6	0.29	9′-0	7150
12x12	1	5.0	2-10	12	12	9	10	8	0.66	21′-1	4′-0	1.18	12′-6	1.25	12′-6	0.32	12′-6	0.24	7′-8	5870
	2	5.0	11-15	12	12	10	10	9	0.77	21′-8	4′-3	1.34	12′-6	1.44	12′-6	0.30	12′-6	0.24	7′-8	6375
	3	5.0	16-20	12	12	11	11	11	0.84	21′-2	3′-11	1.40	12′-6	1.50	12′-6	0.27	12′-6	0.27	9′-0	7405
	4	6.0	21-25	12	12	12	12	12	0.90	21′-4	3′-11	1.54	12′-6	1.62	12′-6	0.29	12′-6	0.29	9′-0	8100

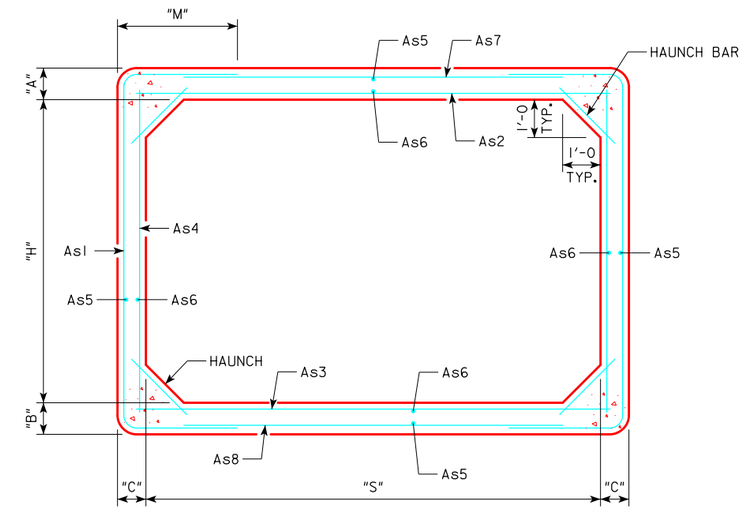

TYPICAL BARREL SECTION

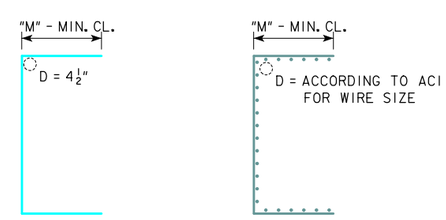

REINFORCEMENT BARS

WELDED WIRE REINFORCEMENT

BENT BAR DETAILS

ALL DIMENSIONS ARE OUT TO OUT.
D = PIN DIAMETER (MIN.).
PIN DIAMETER MAY BE INCREASED IF NEEDED TO MAINTAIN CLEAR COVER.

NOTES:

1. DIMENSIONS "A", "B" & "C" LISTED IN THE BAR LIST ARE IN INCHES.
2. LONGITUDINAL REINFORCEMENT DENOTED AS As5 AND As6 MUST BE PLACED IN SLAB, FLOOR, AND WALLS AND MUST BE 0.06 IN^2/FT MINIMUM.
3. ALL REINFORCEMENT LENGTHS AND AREAS ARE MINIMUM REQUIREMENTS.
4. IF REINFORCING BARS ARE SUBSTITUTED FOR WELDED WIRE REINFORCING, DIMENSION "M" AND/OR LENGTH OF THE As7/As8 REINFORCEMENT SHALL BE ADJUSTED TO ENSURE ADEQUATE LAP LENGTH IS PROVIDED.
5. WEIGHT OF SECTIONS ASSUMES A DENSITY OF 150 PCF AND SQUARED CORNERS.
6. SEE PRCB G1-13 AND G2-13 FOR ADDITIONAL INFORMATION AND NOTES.

LATEST REVISION DATE

APPROVED BY BRIDGE ENGINEER

IOWA DOT Highway Division

STANDARD DESIGN

SINGLE PRECAST REINFORCED CONCRETE BOX CULVERTS

JANUARY, 2013

CULVERT BARREL DETAILS

12′ SPAN BARREL SECTIONS

PRCB 12-13

ENGLISHSIGNEDPRECASTCULVERTS.DGN - PRCB 12-13 - THIS SHEET ISSUED 01-13.

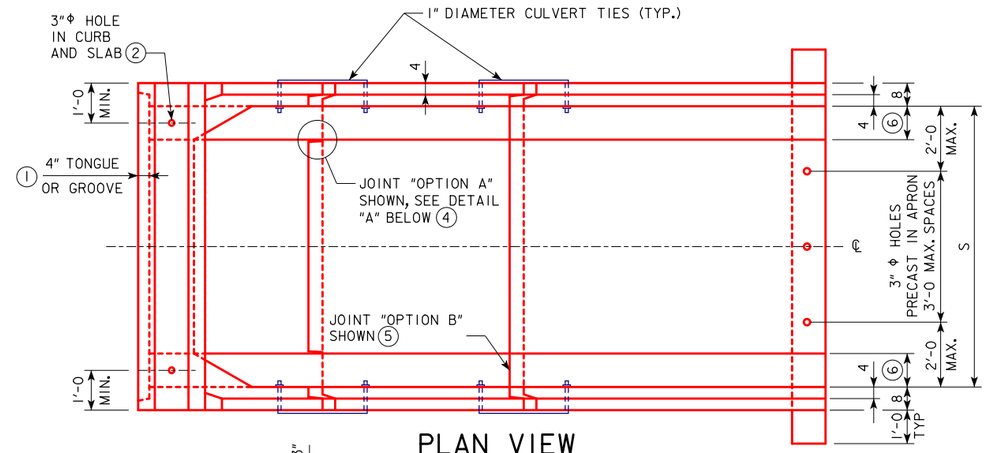

PLAN VIEW
(REINFORCEMENT NOT SHOWN)

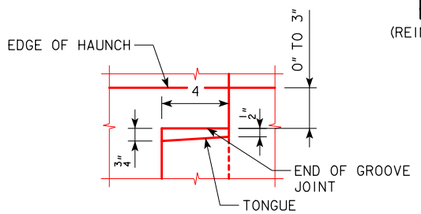

DETAIL "A"
(DETAIL SHOWN AT FLOOR; SIMILAR AT WALLS)

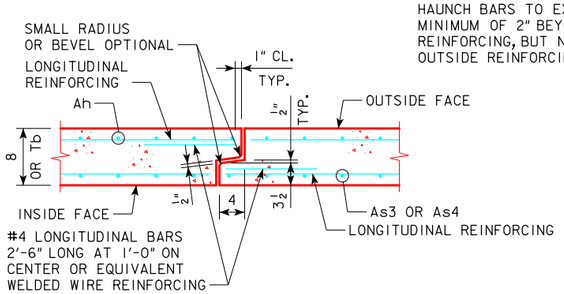

TONGUE AND GROOVE JOINT DETAIL

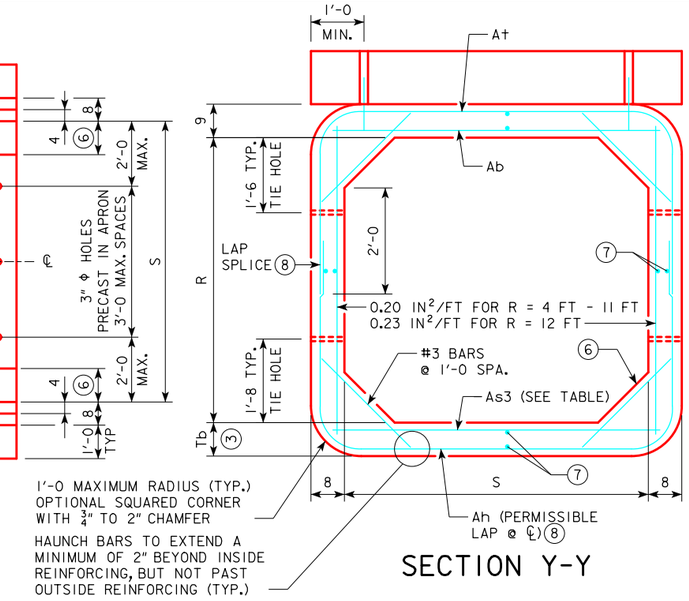

SECTION Y-Y

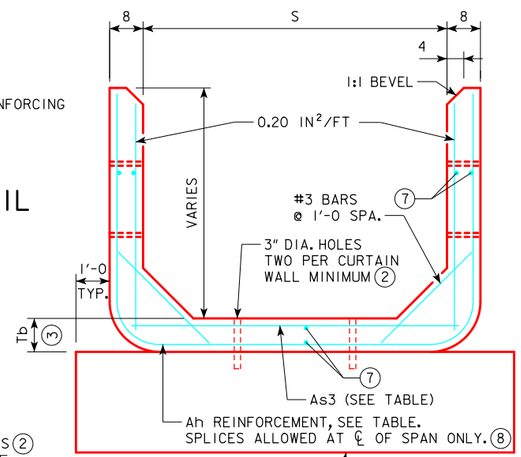

SECTION Z-Z

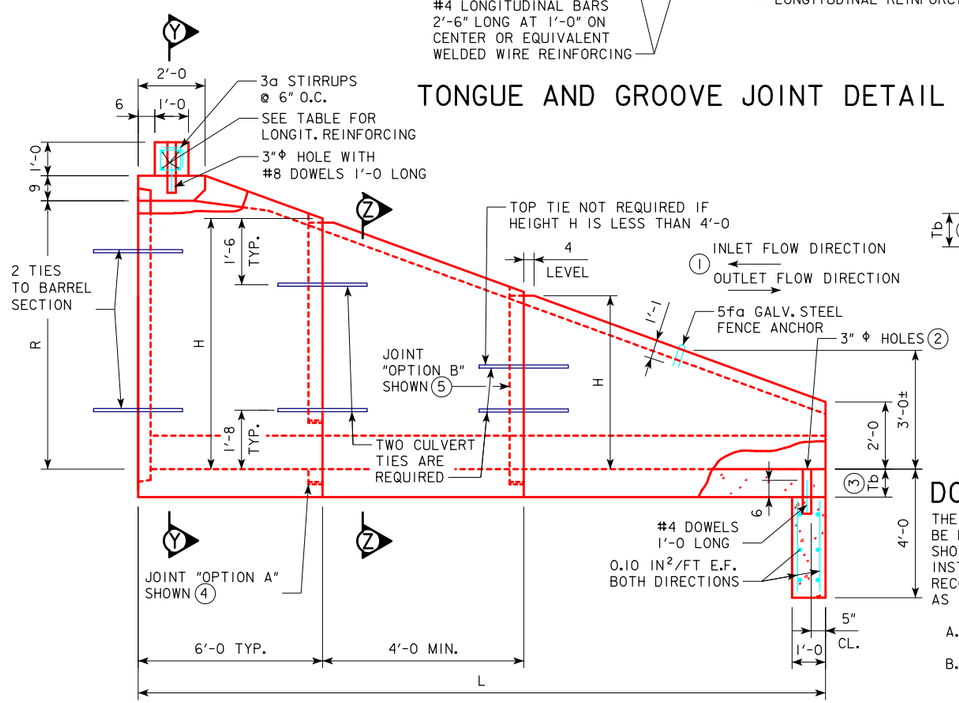

SIDE ELEVATION

DOWEL SETTING NOTE :

THE 5fa BARS MAY BE SET AS DOWELS IN DRILLED HOLES. HOLES SHALL BE DRILLED TO THE DEPTH REQUIRED TO ACHIEVE BAR EMBEDMENT AS SHOWN IN THE "SIDE ELEVATION" DETAIL. THE DOWELS SHALL BE INSTALLED IN ACCORDANCE WITH THE MANUFACTURER'S RECOMMENDATIONS. EITHER OF THE FOLLOWING SYSTEMS MAY BE USED AS A BONDING AGENT:

A. POLYMER GROUT SYSTEM SHALL BE IN ACCORDANCE WITH ARTICLE 2301.03, E, OF THE STANDARD SPECIFICATIONS.
B. HYDRAULIC CEMENT GROUT SYSTEMS. DRILLED HOLES ARE TO BE 2½ TIMES THE DOWEL DIAMETER AND ARE TO BE BLOWN CLEAN WITH COMPRESSED AIR IMMEDIATELY PRIOR TO PLACING GROUT. THE HYDRAULIC CEMENT GROUT SHALL BE ONE OF THOSE APPROVED IN MATERIALS I.M. 491.13.

CONSTRUCTION NOTES:

PRECAST BOX CULVERT END SECTIONS SHALL BE CONSTRUCTED IN ACCORDANCE WITH DETAILS AND NOTES, AS SHOWN BELOW:

REINFORCING FOR PRECAST END SECTIONS & CURTAIN WALLS SHALL BE WELDED WIRE REINFORCING (WWR) MEETING THE REQUIREMENTS OF AASHTO LRFD SECTION 5. THE CONCRETE COVER OVER THE REINFORCING STEEL SHALL NOT BE LESS THAN 1.5 INCHES OR GREATER THAN 2.0 INCHES.

REFER TO SHEET PRCB G1-13 FOR ADDITIONAL NOTES.

REFER TO FABRIC DETAIL ON SHEET PRCB G2-13 FOR MULTIPLE WWR LAYERS.

(1) USE TONGUE ON INLET END SECTION AND GROOVE ON OUTLET END SECTION.

(2) FILL HOLES WITH GROUT. GROUT SHALL CONSIST OF 1 PART CEMENT AND 2 PARTS SAND. USE AIR ENTRAINED PORTLAND CEMENT. GROUT MIX SHALL HAVE A MAXIMUM SLUMP OF 4 INCHES.

(3) THICKNESS OF FLOOR, Tb = 8 IN. FOR 6' SPAN, Tb = 10 IN. FOR ALL OTHER SPANS.

(4) JOINT "OPTION A": PROVIDE JOINT IN WALLS AND FLOOR. TERMINATE JOINT AT HAUNCH. SEE DETAIL "A" ON THIS SHEET.

(5) JOINT "OPTION B": PROVIDE JOINT IN WALLS, FLOOR AND HAUNCH.

(6) HAUNCH DIMENSION TO MATCH BARREL HAUNCH SIZE.

(7) MINIMUM LONGITUDINAL REINFORCEMENT SHALL BE 0.06 SQ. INCHES PER PERIPHERAL FOOT ON ALL FACES OF THE END SECTION, EXCEPT IN THE TONGUE AND GROOVE AREA.

(8) LAP SPLICES SHALL BE CLASS C AND SHALL BE DESIGNED ACCORDING TO THE AASHTO LRFD BRIDGE DESIGN SPECIFICATIONS.

At & Ab REINF.

SPAN S (FT)	At (IN²/FT)	Ab (IN²/FT)
6	0.22	0.33
8	0.24	0.46
10	0.31	0.59
12	0.38	0.74

PARAPET LONGIT. REINFORCING

SPAN S (FT)	REQUIRED BAR SIZE
6'	#5
8'	#6
10'	#6
12'	#7

DIMENS. / Ah & As3 REINF.

SPAN S (FT)	SECTION HT. H (FT)	Ah (IN²/FT)	BOTTOM SLAB THICK. (IN) REQUIRED As3 (IN²/FT)	
6			8	10
	3	0.20	0.20	---
	4	0.20	0.20	---
	5	0.20	0.20	---
	6	0.20	0.20	---
	7	0.31	0.23	---
	8	0.46	0.31	---
8			8	10
	4	0.24	---	0.24
	5	0.24	---	0.24
	6	0.24	---	0.24
	7	0.24	---	0.24
	8	0.34	---	0.24
	9	0.49	---	0.29
	10	0.67	---	0.37
10			8	10
	4	0.24	---	0.24
	5	0.24	---	0.24
	6	0.24	---	0.24
	7	0.24	---	0.24
	8	0.24	---	0.24
	9	0.36	---	0.31
	10	0.51	---	0.40
	11	0.70	---	0.50
	12	0.94	---	0.62
12			8	10
	4	0.24	---	0.24
	5	0.24	---	0.24
	6	0.24	---	0.24
	7	0.24	---	0.24
	8	0.24	---	0.26
	9	0.34	---	0.34
	10	0.49	---	0.42
	11	0.67	---	0.53
	12	0.90	---	0.65

NOTE: H IS THE LARGEST VERTICAL DIMENSION OF THE SECTION.

BENT BAR DETAILS

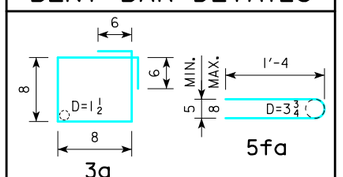

NOTE:
ALL DIMENSIONS ARE OUT TO OUT.
D = PIN DIAMETER.

APRON DIMENS.

BOX RISE R (FT)	APRON LENGTH L (FT)
3	7'-3
4	10'-3
5	13'-3
6	16'-3
7	19'-3
8	22'-3
9	25'-3
10	28'-3
11	31'-3
12	34'-3

07-2016
LATEST REVISION DATE

APPROVED BY BRIDGE ENGINEER

IOWA DOT Highway Division

STANDARD DESIGN

SINGLE PRECAST REINFORCED CONCRETE BOX CULVERTS

JANUARY, 2013

TYPE I END SECTION DETAILS

FOR SKEWS UP TO 7.5°

PES 1-13-T1

REVISED 05-13 - ADDED 3' RISE TO THE APRON DIMENSIONS INFORMATION TABLE.
REVISED 07-2016 - CORRECTED TYPOS.
ENGLISHSIGNEDPRECASTCULVERTS.DGN - PES 1-13-T1 - THIS SHEET ISSUED 01-13.

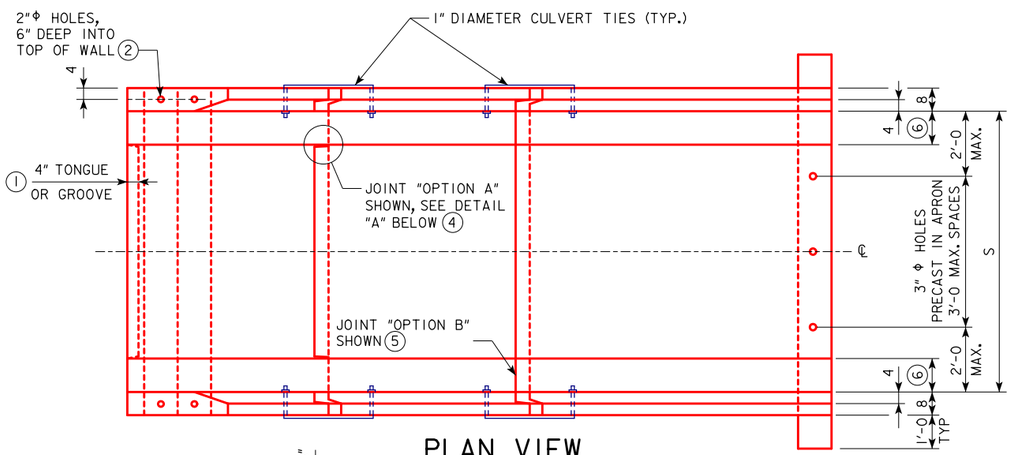

PLAN VIEW
(REINFORCEMENT NOT SHOWN)

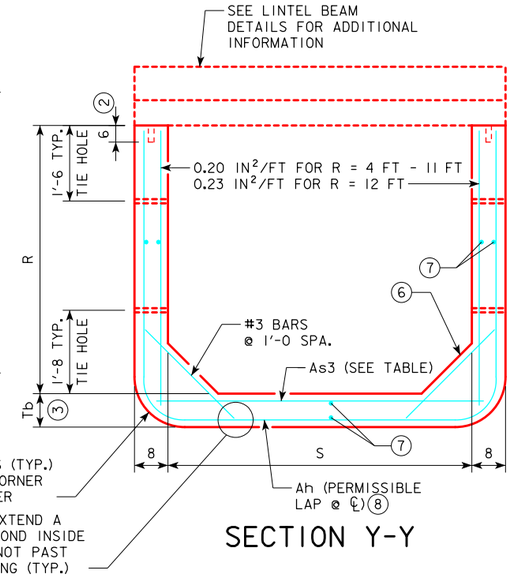

SECTION Y-Y

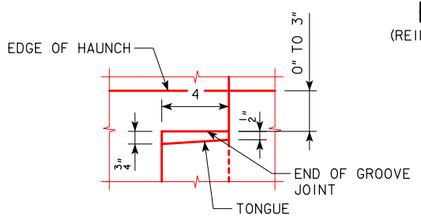

DETAIL "A"
(DETAIL SHOWN AT FLOOR; SIMILAR AT WALLS)

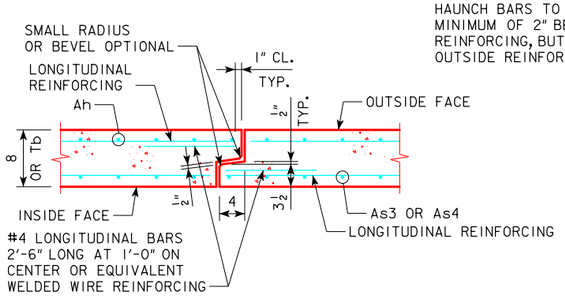

TONGUE AND GROOVE JOINT DETAIL

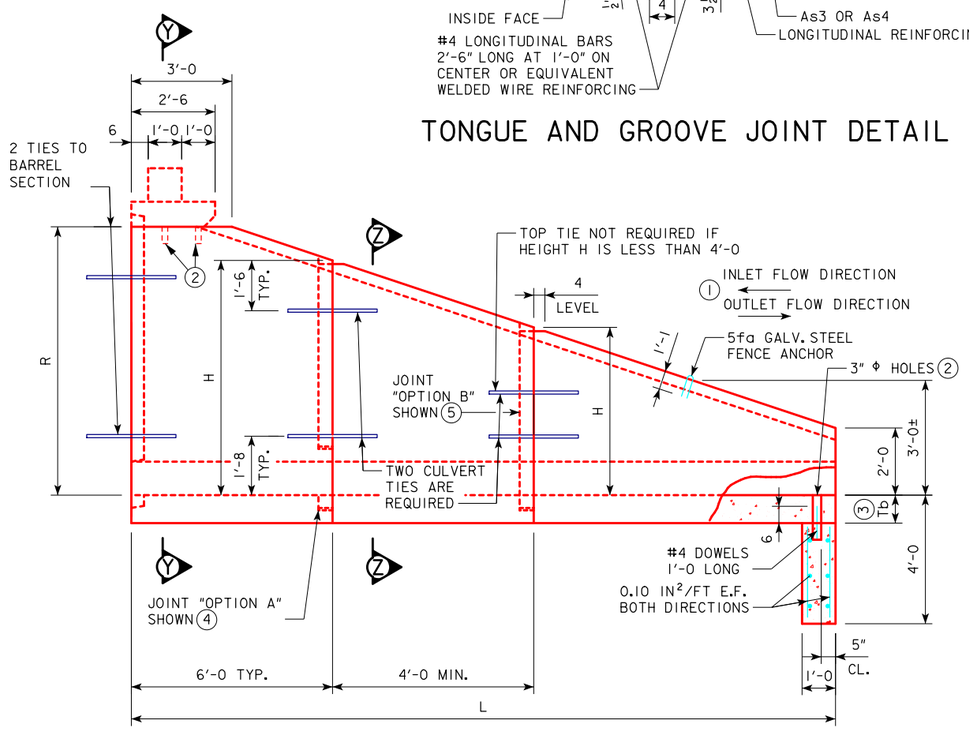

SIDE ELEVATION

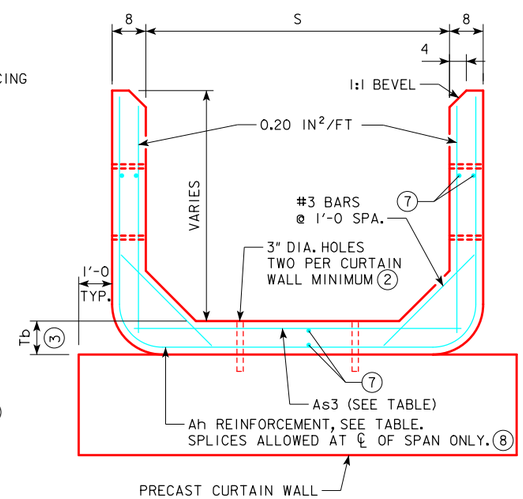

SECTION Z-Z

DOWEL SETTING NOTE :

THE 5fa BARS MAY BE SET AS DOWELS IN DRILLED HOLES. HOLES SHALL BE DRILLED TO THE DEPTH REQUIRED TO ACHIEVE BAR EMBEDMENT AS SHOWN IN THE "SIDE ELEVATION" DETAIL. THE DOWELS SHALL BE INSTALLED IN ACCORDANCE WITH THE MANUFACTURER'S RECOMMENDATIONS. EITHER OF THE FOLLOWING SYSTEMS MAY BE USED AS A BONDING AGENT:

A. POLYMER GROUT SYSTEM SHALL BE IN ACCORDANCE WITH ARTICLE 2301.03, E, OF THE STANDARD SPECIFICATIONS.
B. HYDRAULIC CEMENT GROUT SYSTEMS. DRILLED HOLES ARE TO BE 2½ TIMES THE DOWEL DIAMETER AND ARE TO BE BLOWN CLEAN WITH COMPRESSED AIR IMMEDIATELY PRIOR TO PLACING GROUT. THE HYDRAULIC CEMENT GROUT SHALL BE ONE OF THOSE APPROVED IN MATERIALS I.M. 491.13.

CONSTRUCTION NOTES:

PRECAST BOX CULVERT END SECTIONS SHALL BE CONSTRUCTED IN ACCORDANCE WITH DETAILS AND NOTES, AS SHOWN BELOW:

REINFORCING FOR PRECAST END SECTIONS & CURTAIN WALLS SHALL BE WELDED WIRE REINFORCING (WWR) MEETING THE REQUIREMENTS OF AASHTO LRFD SECTION 5. THE CONCRETE COVER OVER THE REINFORCING STEEL SHALL NOT BE LESS THAN 1.5 INCHES OR GREATER THAN 2.0 INCHES.

REFER TO SHEET PRCB G1-13 FOR ADDITIONAL NOTES.

REFER TO FABRIC DETAIL ON SHEET PRCB G2-13 FOR MULTIPLE WWR LAYERS.

(1) USE TONGUE ON INLET END SECTION AND GROOVE ON OUTLET END SECTION.

(2) FILL HOLES WITH GROUT. GROUT SHALL CONSIST OF 1 PART CEMENT AND 2 PARTS SAND. USE AIR ENTRAINED PORTLAND CEMENT. GROUT MIX SHALL HAVE A MAXIMUM SLUMP OF 4 INCHES.

(3) THICKNESS OF FLOOR, Tb = 8 IN. FOR 6' SPAN, Tb = 10 IN. FOR ALL OTHER SPANS.

(4) JOINT "OPTION A": PROVIDE JOINT IN WALLS AND FLOOR. TERMINATE JOINT AT HAUNCH. SEE DETAIL "A" ON THIS SHEET.

(5) JOINT "OPTION B": PROVIDE JOINT IN WALLS, FLOOR AND HAUNCH.

(6) HAUNCH DIMENSION TO MATCH BARREL HAUNCH SIZE.

(7) MINIMUM LONGITUDINAL REINFORCEMENT SHALL BE 0.06 SQ. INCHES PER PERIPHERAL FOOT ON ALL FACES OF THE END SECTION, EXCEPT IN THE TONGUE AND GROOVE AREA.

(8) LAP SPLICES SHALL BE CLASS C AND SHALL BE DESIGNED ACCORDING TO THE AASHTO LRFD BRIDGE DESIGN SPECIFICATIONS.

APRON DIMENS.

BOX RISE R (FT)	APRON LENGTH L (FT)
3	6
4	9
5	12
6	15
7	18
8	21
9	24
10	27
11	30
12	33

BENT BAR DETAILS

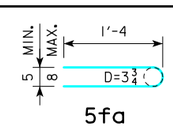

NOTE:
ALL DIMENSIONS ARE OUT TO OUT.
D = PIN DIAMETER.

DIMENS. / Ah & As3 REINF.

SPAN S (FT)	SECTION HT. H (FT)	Ah (IN²/FT)	BOTTOM SLAB THICK. (IN) REQUIRED As3 (IN²/FT)	
6			8	10
	3	0.20	0.20	---
	4	0.20	0.20	---
	5	0.20	0.20	---
	6	0.20	0.20	---
	7	0.31	0.23	---
	8	0.46	0.31	---
8			8	10
	4	0.24	---	0.24
	5	0.24	---	0.24
	6	0.24	---	0.24
	7	0.24	---	0.24
	8	0.34	---	0.24
	9	0.49	---	0.29
	10	0.67	---	0.37
10			8	10
	4	0.24	---	0.24
	5	0.24	---	0.24
	6	0.24	---	0.24
	7	0.24	---	0.24
	8	0.24	---	0.24
	9	0.36	---	0.31
	10	0.51	---	0.40
	11	0.70	---	0.50
	12	0.94	---	0.62
12			8	10
	4	0.24	---	0.24
	5	0.24	---	0.24
	6	0.24	---	0.24
	7	0.24	---	0.24
	8	0.24	---	0.26
	9	0.34	---	0.34
	10	0.49	---	0.42
	11	0.67	---	0.53
	12	0.90	---	0.65

NOTE: H IS THE LARGEST VERTICAL DIMENSION OF THE SECTION.

07-2016
LATEST REVISION DATE

APPROVED BY BRIDGE ENGINEER

IOWA DOT Highway Division

STANDARD DESIGN

SINGLE PRECAST REINFORCED CONCRETE BOX CULVERTS

JANUARY, 2013

TYPE 3 END SECTION DETAILS

FOR SKEWS UP TO 7.5°

PES 1-13-T3

REVISED 05-13 - ADDED THE 3' RISE TO THE APRON DIMENSION INFORMATION TABLE.
REVISED 07-2016 - CORRECTED TYPOS.
ENGLISHSIGNEDPRECASTCULVERTS.DGN - PES 1-13-T3 - THIS SHEET ISSUED 01-13.

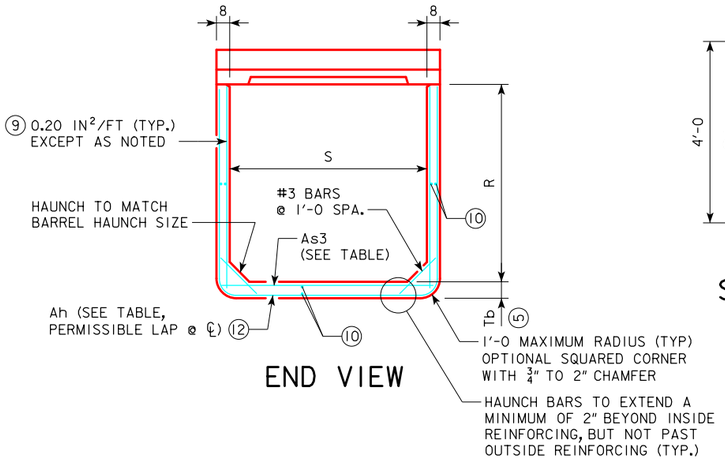

END VIEW

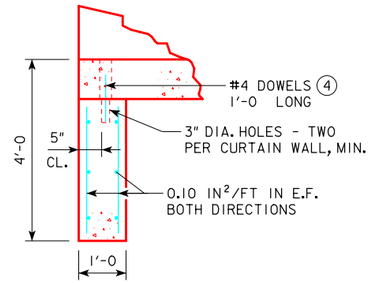

SECTION A-A

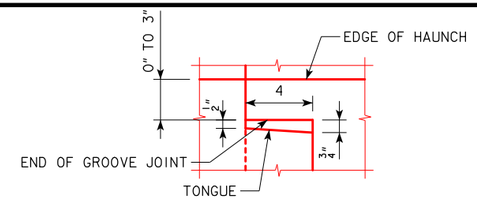

DETAIL "A"

(DETAIL SHOWN AT FLOOR; SIMILAR AT WALLS)

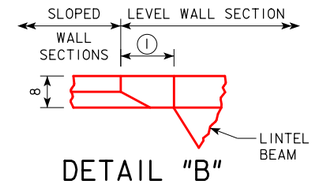

DETAIL "B"

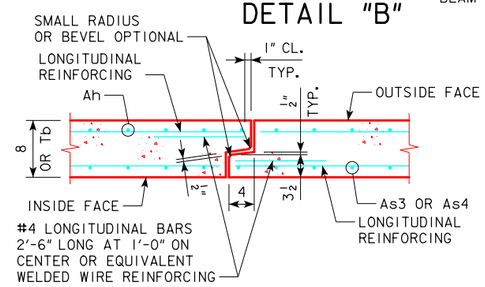

TONGUE AND GROOVE JOINT DETAIL

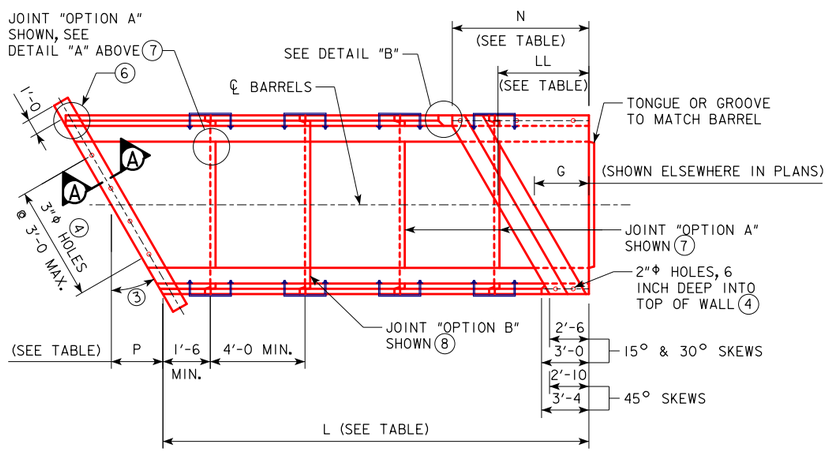

PLAN VIEW

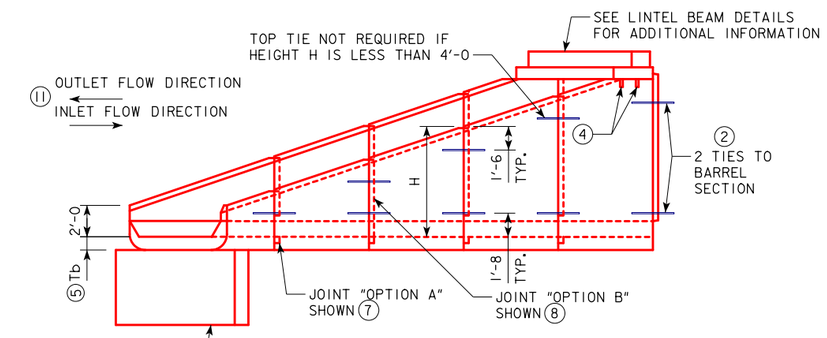

ELEVATION

NOTE:
DETAILS SHOWN ARE FOR LEFT AHEAD SKEW.
SEE SITUATION PLAN FOR ACTUAL DIRECTION OF SKEW.
DETAILS FOR RIGHT AHEAD SKEWS SIMILAR.

DIMENS.		Ah & As3 REINFORCEMENT				
SPAN S (FT)	SECTION HT. H (FT)	Ah (IN²/FT)			BOTTOM SLAB THICK. (IN) REQUIRED As3 (IN²/FT)	
6		15° SKEW	30° SKEW	45° SKEW	8	10
	3	0.20	0.20	0.20	0.20	---
	4	0.20	0.20	0.20	0.20	---
	5	0.20	0.20	0.20	0.20	---
	6	0.21	0.22	0.24	0.20	---
	7	0.33	0.36	0.38	0.23	---
	8	0.50	0.53	0.56	0.31	---
8		15° SKEW	30° SKEW	45° SKEW	8	10
	4	0.24	0.24	0.24	---	0.24
	5	0.24	0.24	0.24	---	0.24
	6	0.24	0.24	0.24	---	0.24
	7	0.25	0.27	0.28	---	0.24
	8	0.37	0.40	0.42	---	0.24
	9	0.53	0.57	0.60	---	0.29
	10	0.73	0.78	0.83	---	0.37
10		15° SKEW	30° SKEW	45° SKEW	8	10
	4	0.24	0.24	0.24	---	0.24
	5	0.24	0.24	0.24	---	0.24
	6	0.24	0.24	0.24	---	0.24
	7	0.24	0.24	0.24	---	0.24
	8	0.27	0.28	0.30	---	0.24
	9	0.39	0.42	0.44	---	0.31
	10	0.56	0.60	0.64	---	0.40
	11	0.77	0.82	0.87	---	0.50
	12	1.02	1.09	1.16	---	0.62
12		15° SKEW	30° SKEW	45° SKEW	8	10
	4	0.24	0.24	0.24	---	0.24
	5	0.24	0.24	0.24	---	0.24
	6	0.24	0.24	0.24	---	0.24
	7	0.24	0.24	0.24	---	0.24
	8	0.29	0.29	0.29	---	0.26
	9	0.37	0.40	0.42	---	0.34
	10	0.53	0.57	0.60	---	0.42
	11	0.73	0.78	0.83	---	0.53
	12	0.97	1.05	1.10	---	0.65

NOTE: H IS THE LARGEST VERTICAL DIMENSION OF THE SECTION.

NOTES:

PRECAST BOX CULVERT END SECTIONS SHALL BE CONSTRUCTED IN ACCORDANCE WITH DETAILS AND NOTES, AS SHOWN BELOW:

REINFORCING FOR PRECAST END SECTIONS AND CURTAIN WALLS SHALL BE WELDED WIRE REINFORCING (WWR) MEETING THE REQUIREMENTS OF AASHTO LRFD SECTION 5. THE CONCRETE COVER OVER THE REINFORCING SHALL NOT BE LESS THAN 1.5 INCHES OR GREATER THAN 2.0 INCHES.

REFER TO SHEET PRCB G1-13 FOR ADDITIONAL NOTES.

REFER TO FABRIC LAYER DETAIL ON SHEET PRCB G2-13 FOR MULTIPLE WWR LAYERS.

① $8\frac{1}{8}$" @ 15° ; $10\frac{5}{8}$" @ 30° ; 1'-2 @ 45°

② CULVERT TIES ARE TO BE 1 INCH DIA. RODS.

③ FOR SKEW ANGLES OVER 7°30' UP TO 22°30', USE A 15° SKEW END SECTION. FOR SKEW ANGLES OVER 22°30' UP TO 37°30', USE A 30° SKEW END SECTION. FOR SKEW ANGLES OVER 37°30' UP TO 45°, USE A 45° SKEW END SECTION.

④ FILL HOLES WITH GROUT. GROUT SHALL CONSIST OF 1 PART CEMENT AND 2 PARTS SAND. USE AIR ENTRAINED PORTLAND CEMENT. GROUT MIX SHALL HAVE A MAXIMUM SLUMP OF 4 INCHES.

⑤ THICKNESS OF FLOOR, Tb = 8 IN. FOR 6' SPAN AND Tb = 10 IN. FOR ALL OTHER SPANS.

⑥ END OF WALL MAY BE CUT SQUARE AS SHOWN OR FOLLOW THE SKEW.

⑦ JOINT "OPTION A": PROVIDE JOINT IN WALLS AND FLOOR. TERMINATE JOINT AT HAUNCH. SEE DETAIL "A" ON THIS SHEET.

⑧ JOINT "OPTION B": PROVIDE JOINT IN WALLS, FLOOR AND HAUNCH.

⑨ FOR THE FIRST SECTION ADJACENT TO THE BARREL, SEE As4 TABLE

⑩ MINIMUM LONGITUDINAL REINFORCEMENT SHALL BE 0.06 SQ. INCHES PER PERIPHERAL FOOT ON ALL FACES OF THE END SECTION, EXCEPT IN THE TONGUE AND GROOVE AREA.

⑪ USE TONGUE ON INLET END SECTION AND GROOVE ON OUTLET END SECTION.

⑫ LAP SPLICES SHALL BE CLASS C AND SHALL BE DESIGNED ACCORDING TO THE AASHTO LRFD BRIDGE DESIGN SPECIFICATIONS.

LENGTH L

RISE R (FT)	15° SKEW	30° SKEW	45° SKEW
3	6'-1	6'-6	7'-11
4	9'-3	9'-11	12'-2
5	12'-4	13'-5	16'-5
6	15'-5	16'-10	20'-8
7	18'-6	20'-4	24'-11
8	21'-8	23'-9	29'-1
9	24'-9	27'-3	33'-4
10	27'-10	30'-9	37'-7
11	30'-11	34'-2	41'-10
12	34'-1	37'-8	46'-1

L - BASED ON 3:1 FORESLOPE NORMAL TO ℄ OF ROADWAY.

As4 REINF. (IN²/FT)

SECTION HT. H (FT)	15° SKEW	30° SKEW	45° SKEW
10 OR LESS	0.20	0.20	0.20
11	0.20	0.21	0.22
12	0.25	0.27	0.29

NOTE:
As4 IS INSIDE FACE WALL STEEL FOR THE FIRST SECTION ADJACENT TO THE BARREL ONLY. H IS THE LARGEST VERTICAL DIMENSION OF THE SECTION. FOR ALL OTHER SECTIONS, As4 = 0.20 IN²/FT

LENGTH LL

SPAN S (FT)	15° SKEW	30° SKEW	45° SKEW
6	3'-6	4'-7	6'-6
8	3'-9	5'-2	7'-6
10	4'-0	5'-9	8'-6
12	4'-3	6'-4	9'-6

LENGTH N

SPAN S (FT)	15° SKEW	30° SKEW	45° SKEW
6	4'-3	6'-4	9'-6
8	4'-10	7'-6	11'-6
10	5'-4	8'-8	13'-6
12	5'-11	9'-10	15'-6

LENGTH P

SPAN S (FT)	15° SKEW	30° SKEW	45° SKEW
6	1'-0	2'-1	3'-8
8	1'-3	2'-8	4'-8
10	1'-6	3'-3	5'-8
12	1'-9	3'-10	6'-8

NOTE:
DIMENSIONS SHOWN IN TABLES ARE ROUNDED TO THE NEAREST WHOLE INCH.

07-2016
LATEST REVISION DATE

APPROVED BY BRIDGE ENGINEER

IOWA DOT Highway Division

STANDARD DESIGN

SINGLE PRECAST REINFORCED CONCRETE BOX CULVERTS

JANUARY, 2013

TYPE 3 END SECTION DETAILS

FOR SKEWS OF 7.5° TO 45°

PES 2-13-T3

REVISED 05-13 - ADDED THE 3' RISE TO THE LENGTH L INFORMATION TABLE.
REVISED 07-2016 - CORRECTED TYPOS. ADDED DIM. "G" ALONG CENTERLINE OF SKEWED LINTLE BEAM.
ENGLISHSIGNEDPRECASTCULVERTS.DGN - PES 2-13-T3 - THIS SHEET ISSUED 01-13.

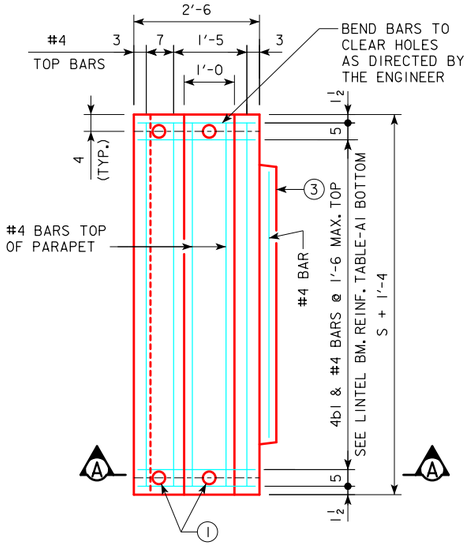

PLAN OF SQUARE LINTEL BEAM

(TONGUE OPTION SHOWN)

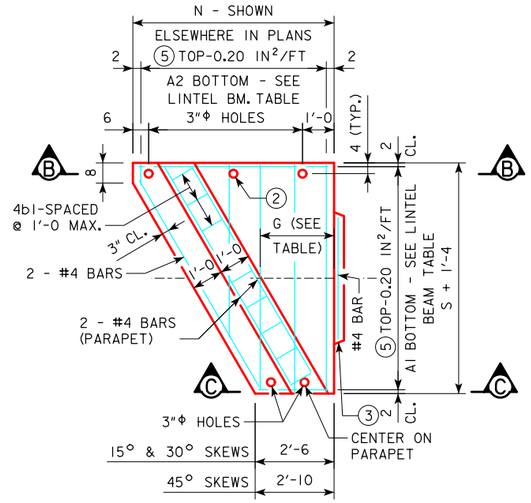

PLAN VIEW

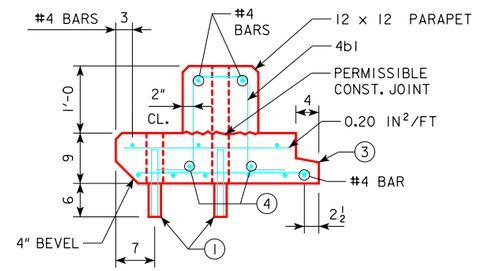

SECTION C-C

(TONGUE OPTION SHOWN)

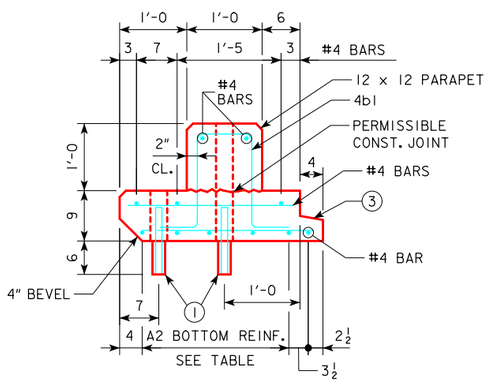

SECTION A-A

(TONGUE OPTION SHOWN)

0° SKEW LINTEL BEAM

(FOR SKEWS UP TO 7°30')

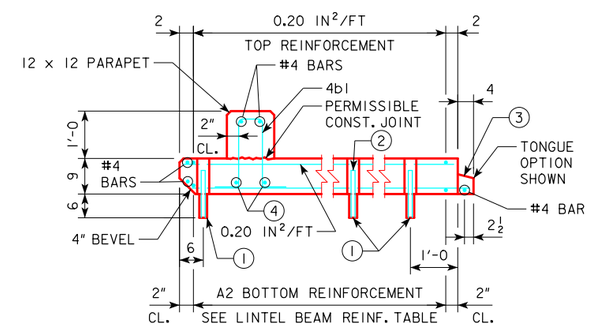

SECTION B-B

SKEWED LINTEL BEAM

(FOR SKEWS OF 7°30' TO 45°)

NOTES:

PRECAST LINTEL BEAMS SHALL BE CONSTRUCTED IN ACCORDANCE WITH PRECAST BARREL AND END SECTION DETAILS AND NOTES, EXCEPT AS MODIFIED BELOW:

REINFORCING FOR PRECAST LINTELS AND PARAPETS SHALL BE EITHER WELDED WIRE REINFORCING (WWR) MEETING THE REQUIREMENTS OF AASHTO LRFD SECTION 5 OR REINFORCING BARS MEETING THE REQUIREMENTS OF ASTM A615 (60 KSI). WIRE SPACING FOR WWR SHALL NOT EXCEED 2 INCHES FOR PRIMARY STEEL AND 8 INCHES FOR DISTRIBUTION STEEL.

1. PLACE #8 DOWEL, 1'-0 LONG INTO 2 INCH DIA. HOLE IN THE TOP OF THE WALL SECTION AND 3 INCH DIA. HOLE IN THE LINTEL BEAM. FILL HOLES WITH GROUT.
2. CAST ADDITIONAL 3 INCH HOLES TO MAINTAIN A 4 FOOT MAXIMUM HOLE SPACING
3. CHECK THE LOCATION TO DETERMINE WHETHER A TONGUE OR A GROOVE IS USED. TONGUE AND GROOVE TO TERMINATE AT CULVERT RADIUS.
4. SEE SKEWED PARAPET REINFORCEMENT TABLE.
5. AREAS SHOWN ARE FOR WELDED WIRE FABRIC. IF REBAR IS USED, #4 AT A MAX. OF 11 INCH SPACING SHOULD BE USED.

BENT BAR DETAILS

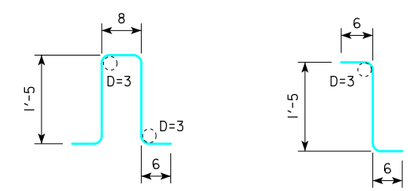

4b1 — ALTERNATE 4b1 (2 REQUIRED)

NOTE: ALL DIMENSIONS ARE OUT TO OUT. D = PIN DIAMETER.

LENGTH G

ALONG BARREL ℄ OF SKEWED LINTLE BM.

SPAN S (FT)	15° SKEW	30° SKEW	45° SKEW
6	1'-4 15/16	2'-3 11/16	3'-8 1/16
8	1'-8 3/16	2'-10 5/8	4'-8 1/16
10	1'-11 3/8	3'-5 9/16	5'-8 1/16
12	2'-2 9/16	4'-0 1/2	6'-8 1/16

LINTEL BEAM REINFORCEMENT TABLE

SPAN S (FT)	BOTTOM REINFORCEMENT			
	WWR OPTION		REBAR OPTION	
	A1 (IN²/FT)	A2 (IN²/FT)	A1	A2
6	0.13	0.26	#4 @ 12	3 - #4 @ 12
8	0.16	0.32	#4 @ 12	4 - #4 @ 8
10	0.20	0.40	#4 @ 12	3 - #5 @ 12
12	0.25	0.49	#5 @ 12	4 - #5 @ 8

LINTEL BEAM REINFORCEMENT TABLE

SPAN S (FT)	BOTTOM REINFORCEMENT			
	WWR OPTION		REBAR OPTION	
	A1 (IN²/FT)	A2 (IN²/FT)	A1	A2
6	0.25	0.50	#5 @ 12	#5 @ 6
8	0.36	0.72	#6 @ 12	#6 @ 6
10	0.49	0.98	#7 @ 12	#7 @ 6
12	0.65	1.30	#8 @ 12	#8 @ 6

SKEWED PARAPET REINFORCEMENT TABLE

SPAN S (FT)	15° SKEW	30° SKEW	45° SKEW
6	3 - #4	2 - #5	2 - #6
8	2 - #6	2 - #6	2 - #7
10	2 - #7	2 - #7	3 - #7
12	2 - #7	2 - #8	3 - #8

07-2016
LATEST REVISION DATE

APPROVED BY BRIDGE ENGINEER

IOWA DOT Highway Division

STANDARD DESIGN

SINGLE PRECAST REINFORCED CONCRETE BOX CULVERTS

JANUARY, 2013

TYPE 3 LINTEL BEAM DETAILS

FOR SKEWS 0° TO 45°

PES 3-13-T3

REVISED 07-2016 - CORRECTED TYPOS. ADDED DIM. "G" ALONG CENTERLINE OF SKEWED LINTLE BEAM. ADDED TABLE FOR LENGTH "G".
ENGLISHSIGNEDPRECASTCULVERTS.DGN - PES 3-13-T3 - THIS SHEET ISSUED 01-13.

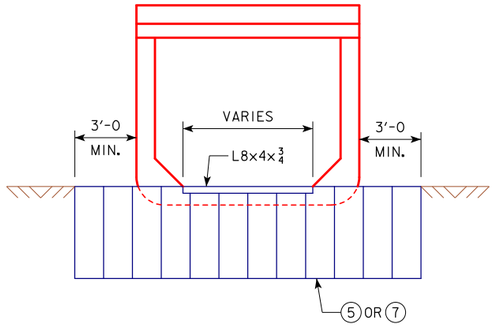

END VIEW

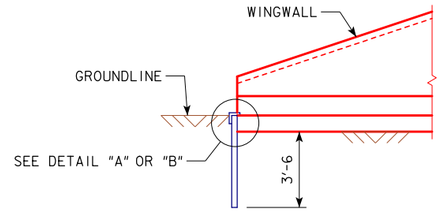

ELEVATION

ALTERNATES 1 & 2 (GALVANIZED STEEL SHEET PILING)

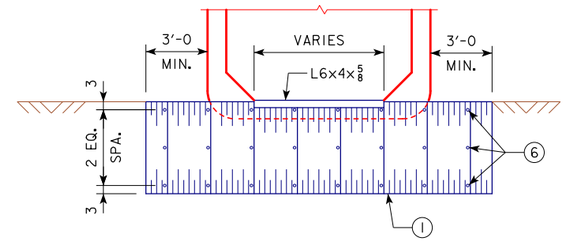

END VIEW

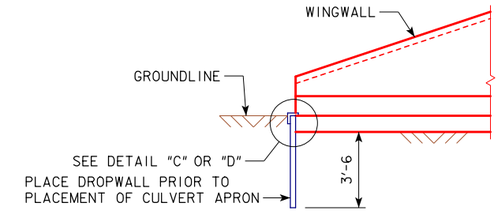

ELEVATION

ALTERNATES 3 & 4 (GALVANIZED STEEL SHEETS)

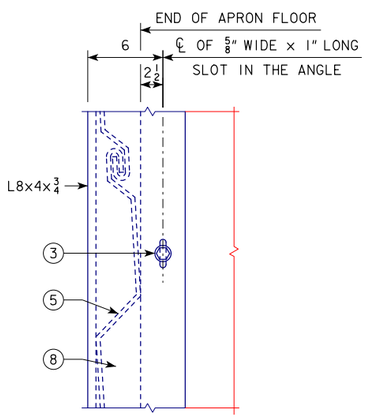

PLAN

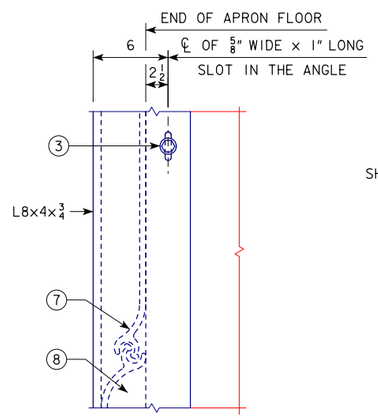

PLAN

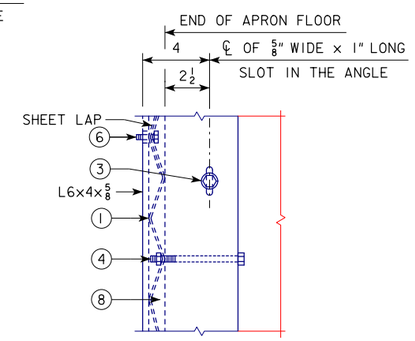

PLAN

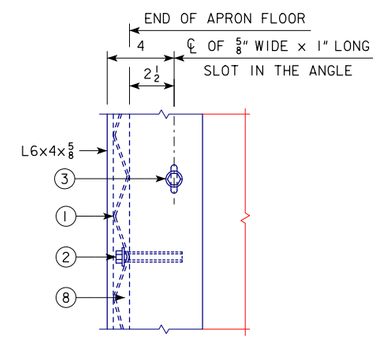

PLAN

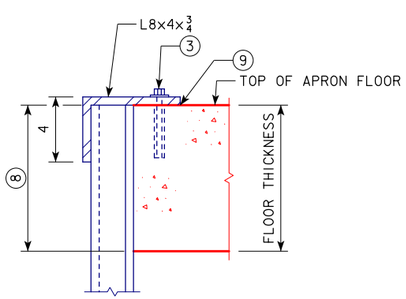

ELEVATION

DETAIL "A"
ALTERNATE 1
STEEL SHEET PILING SHOWN

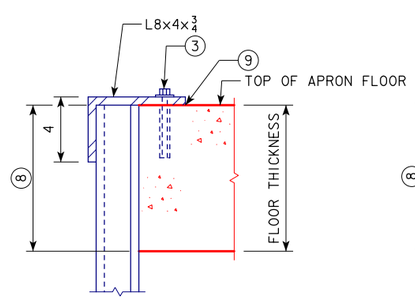

ELEVATION

DETAIL "B"
ALTERNATE 2
STEEL SHEET PILING SHOWN

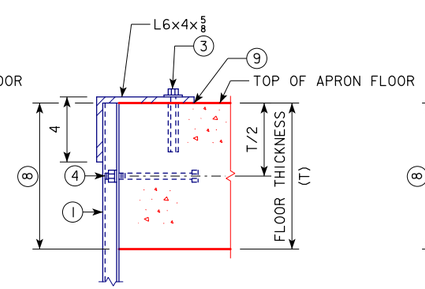

ELEVATION

DETAIL "C"
ALTERNATE 3
ON NEW CONSTRUCTION ONLY

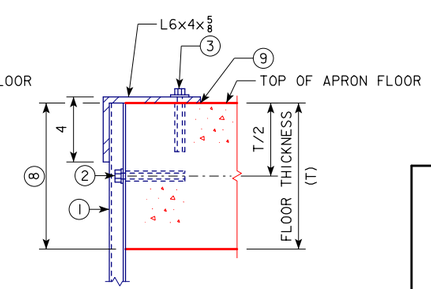

ELEVATION

DETAIL "D"
ALTERNATE 4
ON NEW OR OLD CONSTRUCTION

NOTES:

USE OF ALTERNATE CURTAIN WALLS SHALL BE APPROVED BY THE ENGINEER.

ALL CURTAIN WALL MATERIAL, INCLUDING BOLTS, NUTS, WASHERS, AND ANGLES SHALL BE GALVANIZED.

1. $2\frac{1}{2}$"x$\frac{1}{2}$" OR 2"x$\frac{1}{2}$" CORRUGATED (12 GAGE OR HEAVIER) GALVANIZED STEEL SHEETS.
2. FASTEN THE STEEL SHEETS TO THE FRONT EDGE OF THE APRON WITH $\frac{3}{8}$"Φ x0'-4 BOLTS AND APPROVED ANCHORAGES (10" CENTER TO CENTER, TO THE NEAREST VALLEY).
3. FASTEN THE L8x4x$\frac{3}{4}$ OR L6x4x$\frac{5}{8}$ WITH $\frac{3}{8}$"Φx0'-4 BOLTS, 1" O.D. WASHER AND AN APPROVED ANCHORAGE (2'-0 SPACING).
4. FASTEN THE STEEL SHEETS TO THE FRONT EDGE OF THE APRON WITH $\frac{3}{8}$"Φ x0'-5 BOLTS WITH NUT AND LOCK WASHER (10" CENTER TO CENTER, TO THE NEAREST VALLEY).
5. GALVANIZED CORRUGATED (12 GAUGE OR HEAVIER) STEEL SHEET PILING, INTERLOCKING TYPE A.
6. $\frac{3}{8}$"Φx0'-1 BOLT WITH NUT, TO LAP STEEL SHEETS.
7. GALVANIZED STEEL SHEET PILING, SECTION PS 27.5 OR EQUAL.
8. FILL THE VOIDS AS SHOWN, WITH CONCRETE OR CONCRETE GROUT, AS APPROVED BY THE ENGINEER.
9. CAULK JOINT BETWEEN TOP OF APRON FLOOR AND ANGLE. CAULKING MATERIAL SHALL BE NEUTRAL CURE AND NON-SAG SILICONE. THREE PRODUCTS MEETING THESE CRITERIA ARE DOW 888, CSL 342 JOINT SEALANT, AND CRAFCO ROAD SAVER SILICONE.

LATEST REVISION DATE

APPROVED BY BRIDGE ENGINEER

IOWA DOT Highway Division

STANDARD DESIGN

SINGLE PRECAST REINFORCED CONCRETE BOX CULVERTS

JANUARY, 2013

ALTERNATE CURTAIN WALL DETAILS

PES 4-13

ENGLISHSIGNEDPRECASTCULVERTS.DGN - PES 4-13 - THIS SHEET ISSUED 01-13.

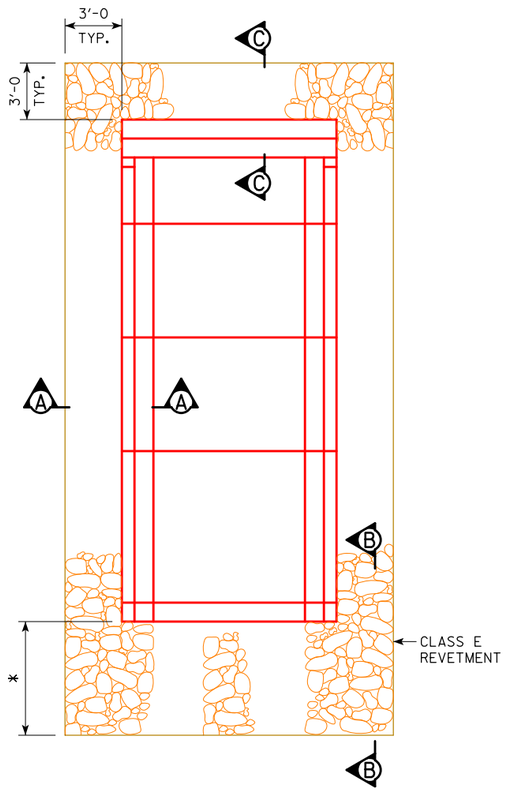

PLAN VIEW

* = SEE CULVERT PLANS FOR LIMITS OF REVETMENT AND ENGINEERING FABRIC.

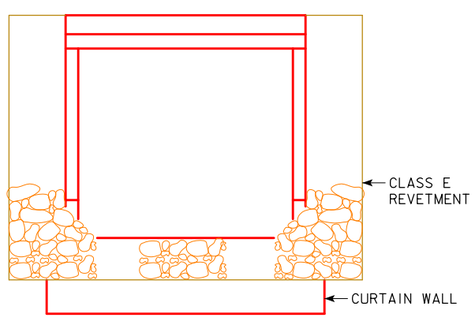

ELEVATION VIEW

NON-SKEW END SECTIONS

* = SEE CULVERT PLANS FOR LIMITS OF REVETMENT AND ENGINEERING FABRIC.

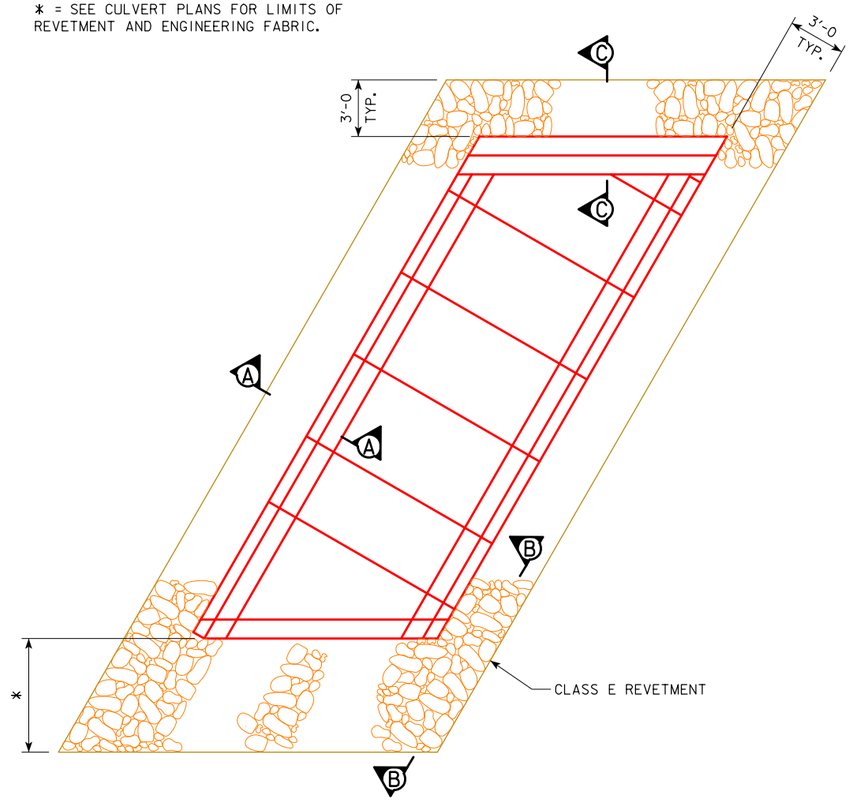

PLAN VIEW

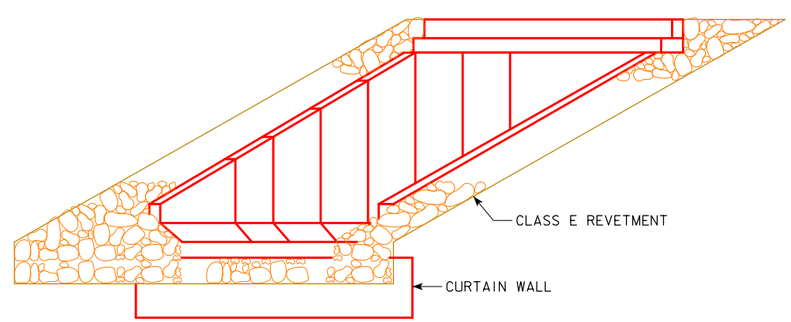

ELEVATION VIEW

SKEWED END SECTIONS

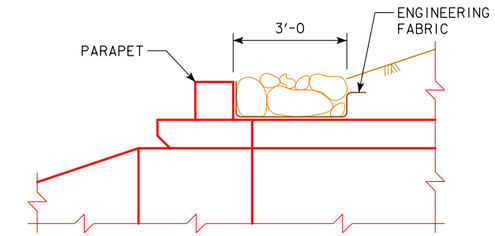

SECTION C-C

* = SEE CULVERT PLANS FOR LIMITS OF REVETMENT AND ENGINEERING FABRIC.

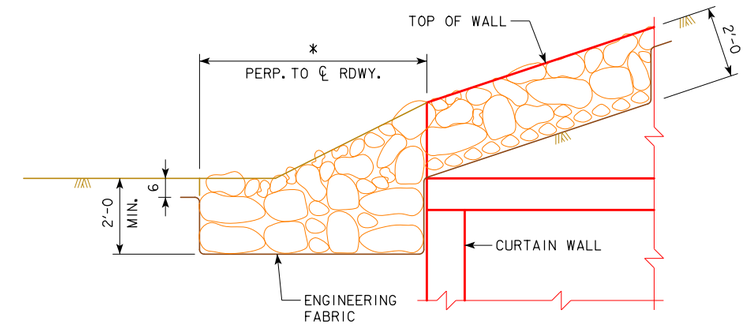

SECTION B-B

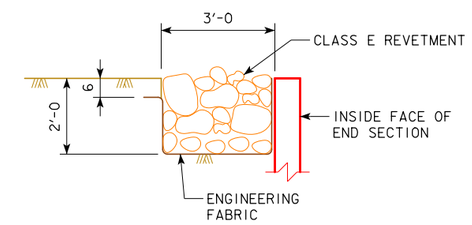

SECTION A-A

TYPICAL DETAILS

CONSTRUCTION NOTES:

CLASS E REVETMENT SHOULD BE USED AND PLACED ACCORDING TO ARTICLE 2507.03 OF THE STANDARD SPECIFICATIONS.

THE ENGINEERING FABRIC SHALL MEET THE MATERIAL REQUIREMENTS IN ACCORDANCE WITH ARTICLE 4196.01, B, 3 OF THE STANDARD SPECIFICATIONS.

12-15
LATEST REVISION DATE

APPROVED BY BRIDGE ENGINEER

IOWA DOT Highway Division

STANDARD DESIGN

SINGLE PRECAST REINFORCED CONCRETE BOX CULVERTS

JANUARY, 2013

EMBANKMENT PROTECTION DETAILS

WITH 0° TO 45° SKEWED END SECTIONS

PEP 1-13

REVISED 10-14 - CHANGED THE AREA OF THE REVETMENT TO INCLUDE THE AREA IN FRONT OF THE APRON. CHANGED THE DEPTH OF REVETMENT TO 2'-0.
REVISED 12-15 - ADDED NOTE "SEE CULVERT PLANS FOR LIMITS OF REVETMENT AND ENGINEERING FABRIC."
ENGLISHSIGNEDPRECASTCULVERTS.DGN - PEP 1-13 - THIS SHEET ISSUED 01-13.