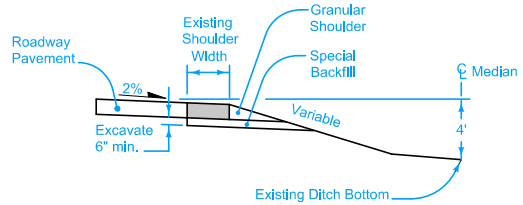

SECTION A-A

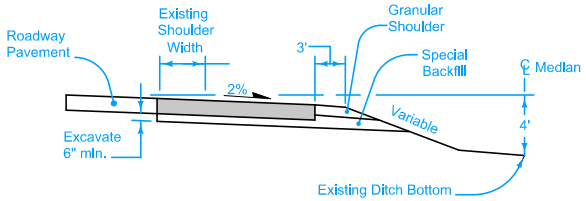

SECTION B-B

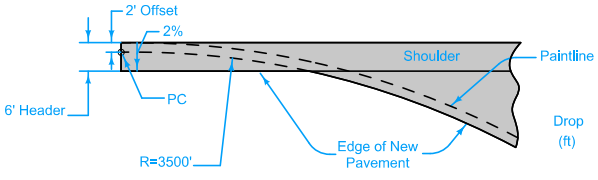

DETAIL 'A'

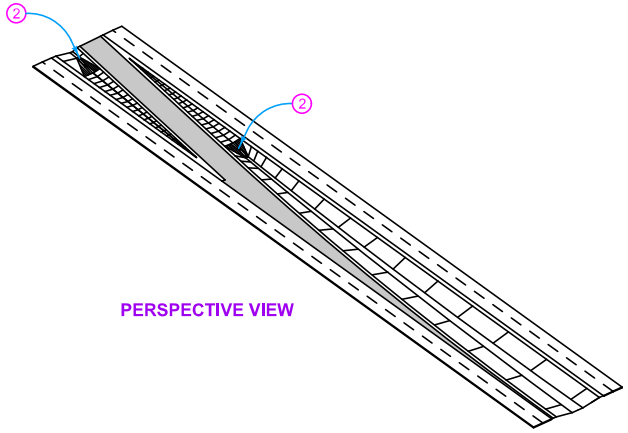

PERSPECTIVE VIEW

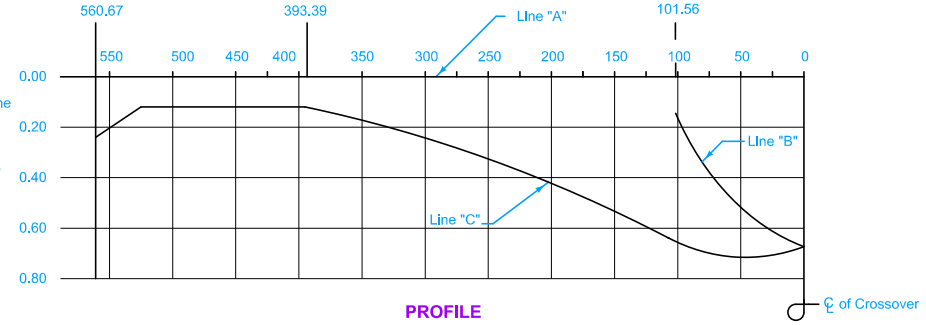

PROFILE

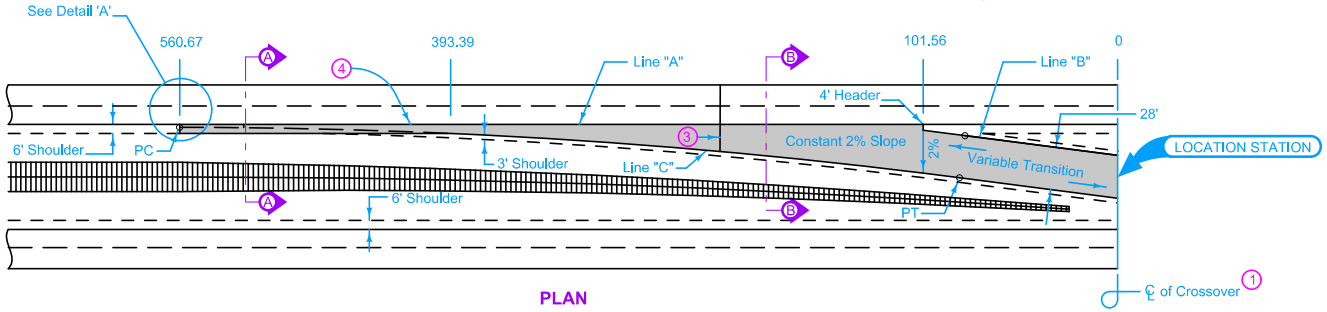

PLAN

Detour Pavement options: 9" PCC or 12" HMA

For joint details, see PV-101.

1. Median crossover is symmetrical about centerline.
2. Median pipe for crossover. See Detail 500-19.
3. For PCC Detour Pavement, match existing roadway joints. 'CD' joints are required.
4. 'KT-2' or 'L-2' joint if mainline pavement is new construction. Bend bars out. 'BT-3' joint if mainline pavement is existing. 'B' joint if Detour Pavement is HMA.

DESIGN QUANTITY TABLE		
Detour Pavement Sq. Yds.	Special Backfill Tons	Granular Shoulder Tons
1970	845	*225

*Quantity based on 8" shoulder depth.

Detour Pavement

Possible Contract Items:
- Detour Pavement
- Embankment In Place
- Excavation, Class 10, Roadway and Borrow
- Excavation, Class 13, Roadway and Borrow
- Granular Shoulders, Type A
- Removal of Pavement
- Special Backfill

Possible Tabulation:
112-8

TABLE OF OFFSETS AND DROPS

Distance (Feet)	560.67	550	500	450	400	393.39	375	350	325	300	275	250	225	200	175	150	125	101.56	100	75	50	25	0
Offset A to C (Feet)	6.00	6.00	6.00	6.00	6.00	6.00	6.93	8.35	9.94	11.72	13.68	15.81	18.13	20.63	23.31	26.18	29.22	32.24	32.45	35.84	39.27	42.70	46.13
Drop A to C (Feet)	0.24	0.22	0.12	0.12	0.12	0.12	0.14	0.17	0.20	0.23	0.27	0.32	0.36	0.41	0.47	0.52	0.58	0.64	0.66	0.70	0.71	0.72	0.68
Drop A to B (Feet)																		0.08	0.16	0.38	0.52	0.61	0.68

Iowa Department of Transportation

STANDARD ROAD PLAN

REVISION	
3	10-15-13

PV-505

SHEET 1 of 1

REVISIONS: Modified note 4.

Brian Smith
APPROVED BY DESIGN METHODS ENGINEER

MEDIAN CROSSOVER
(64' MEDIAN)
28' WIDE 2 LANE