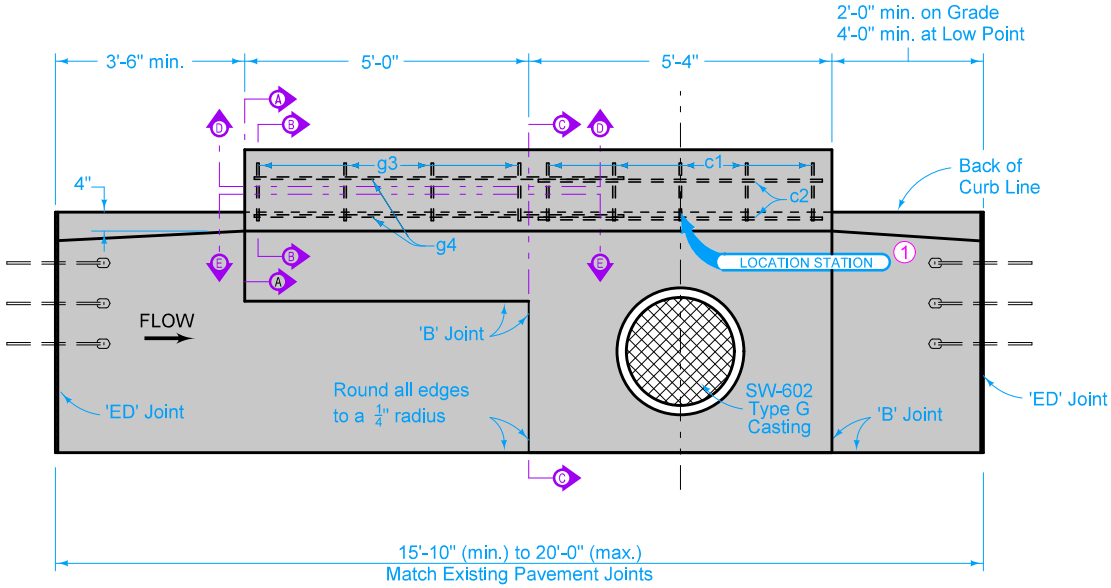

PLAN
(SW-542 EXTENSION AND SW-541 INTAKE)

Extension unit may be used on either or both sides of SW-541 intakes. Details are similar when extension unit is on the opposite side.

Dimensions shown are for the construction of a 6 inch standard curb as a part of pavement. Modifications may be made to conform to other curb shapes.

1 The location station is where the centerline of intake meets the back of the curb line.

Placing sequence: 1. Base; 2. Walls and Extension; 3. Top; 4. Insert

REINFORCING BAR LIST

BAR	SIZE	LOCATION	SHAPE	NO.	LENGTH	WEIGHT	SPACING
b2	4	Intake Wall		3	2'-6"	5.0	9"
f1	4	Bottom		3	4'-9"	9.5	9"
f2	4	Bottom		4	1'-7"	4.2	18"
g1	4	Wall		5	Varies*	3.9	12"
g2	4	Wall		1	4'-8"	3.1	-
g3	4	Top		4	Varies**	6.8	18"
g4	4	Top		3	6'-4"	12.7	-
					Total	45 lbs.	

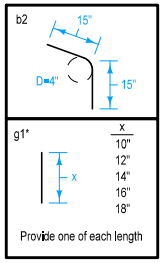

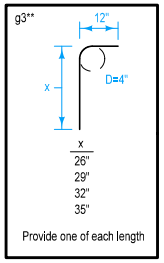

Possible Contract Item:

Intake Extension Unit, SW-542

IOWA DOT

STANDARD ROAD PLAN

REVISION
1 04-18-17

SW-542

SHEET 1 of 3

REVISIONS: Modified notes to clarify the use of SW-541. Added SW-602 callout on Plan View on page 1.

Brian Smith
APPROVED BY DESIGN METHODS ENGINEER

EXTENSION UNIT FOR OPEN-THROAT CURB INTAKE UNDER PAVEMENT

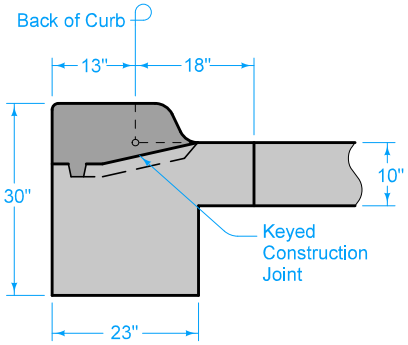

SECTION A-A

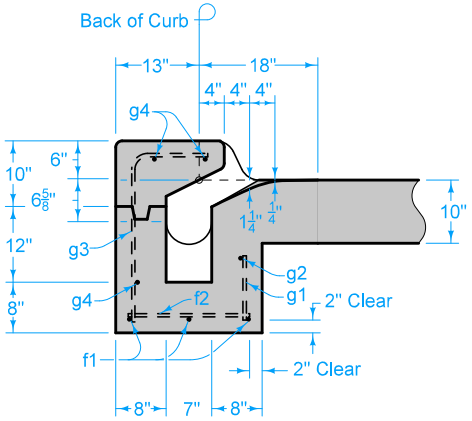

SECTION B-B

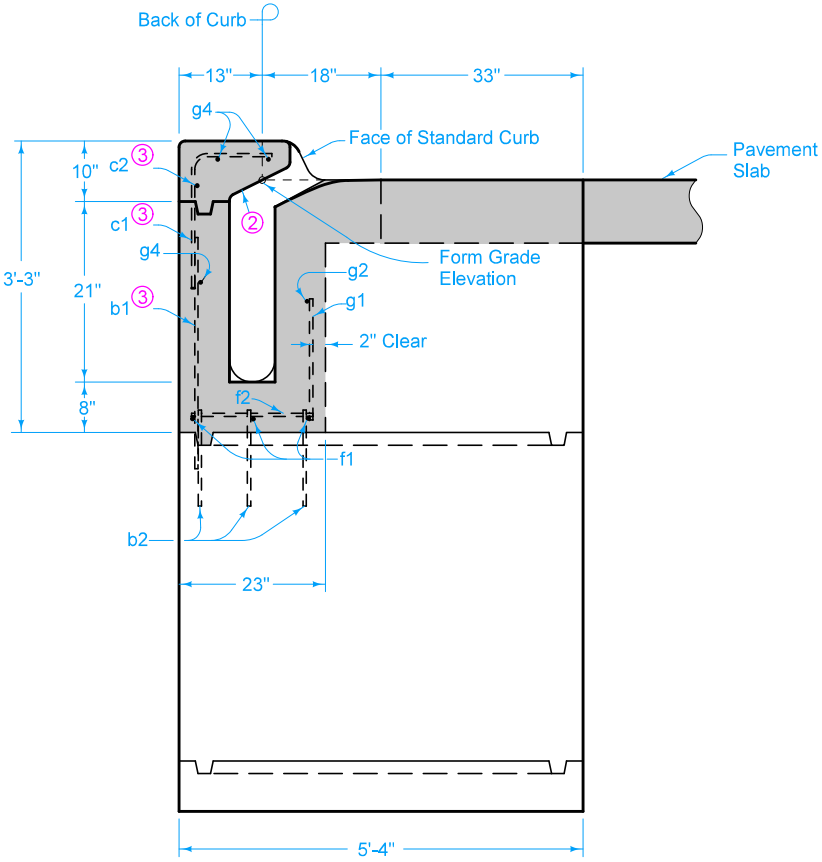

SECTION C-C

② 2:1 Slope (Horizontal:Vertical)

③ See SW-541 for reinforcing.

IOWA DOT

STANDARD ROAD PLAN

REVISION	
1	04-18-17

SW-542

SHEET 2 of 3

REVISIONS: Modified notes to clarify the use of SW-541. Added SW-602 callout on Plan View on page 1.

Brian Smith

APPROVED BY DESIGN METHODS ENGINEER

EXTENSION UNIT FOR OPEN-THROAT CURB INTAKE UNDER PAVEMENT

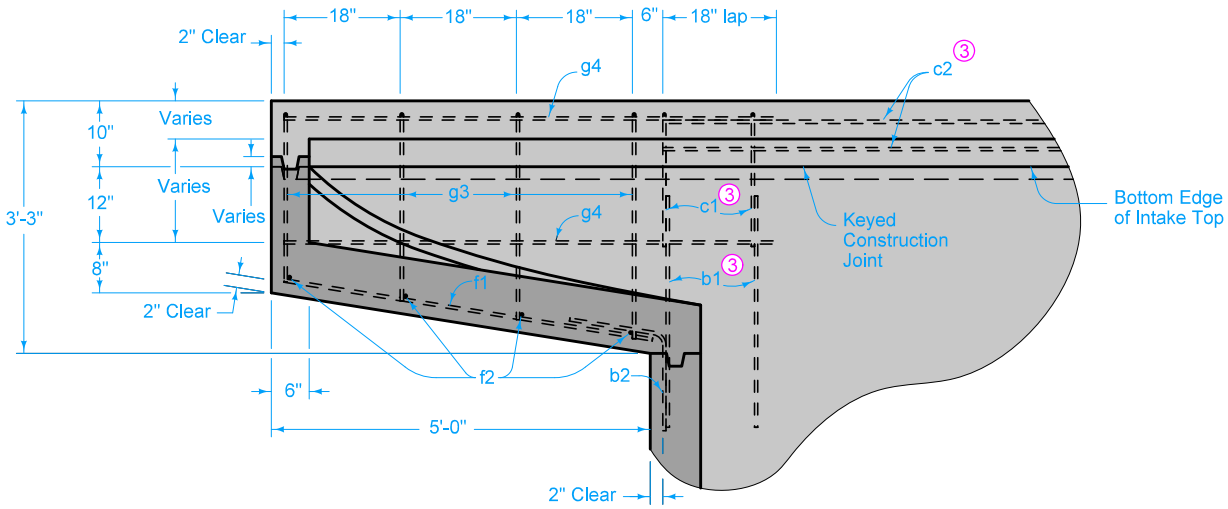

SECTION D-D

③ See SW-541 for reinforcing.

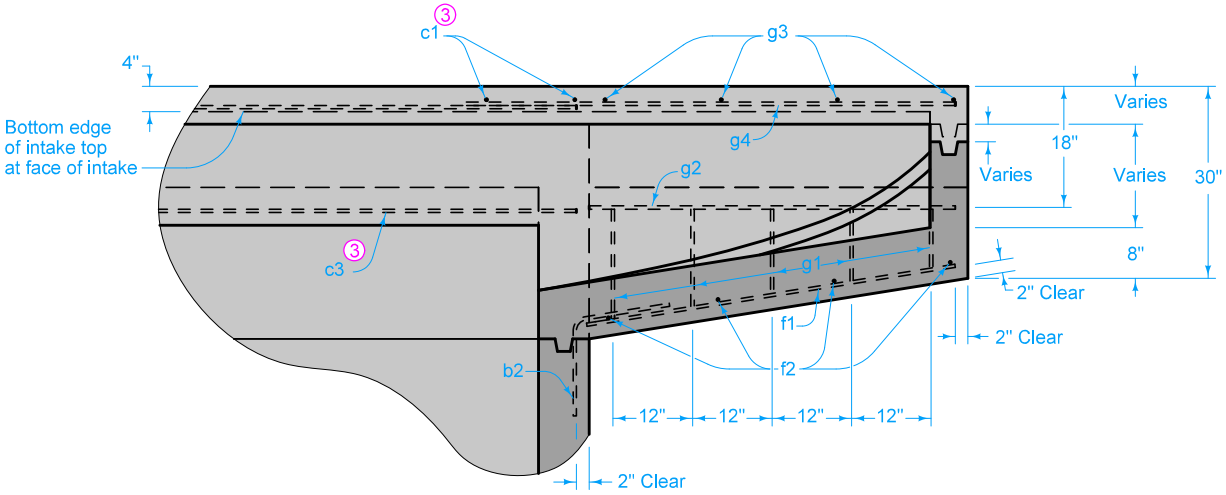

SECTION E-E

IOWA DOT

STANDARD ROAD PLAN

REVISION	
1	04-18-17

SW-542

SHEET 3 of 3

REVISIONS: Modified notes to clarify the use of SW-541. Added SW-602 callout on Plan View on page 1.

Brian Smith

APPROVED BY DESIGN METHODS ENGINEER

EXTENSION UNIT FOR OPEN-THROAT CURB INTAKE UNDER PAVEMENT