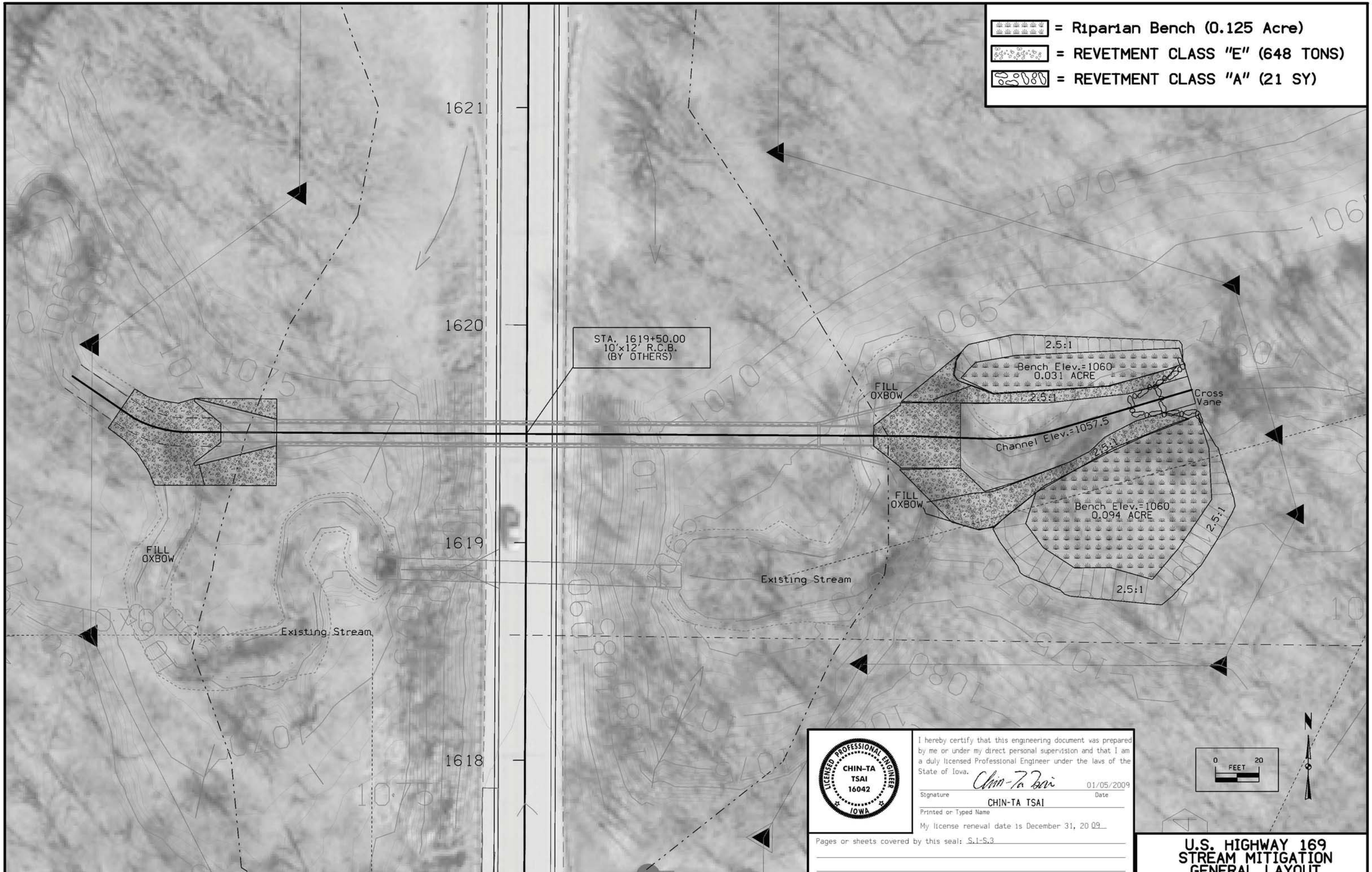

LICENSED PROFESSIONAL ENGINEER
CHIN-TA
TSAI
16042
IOWA

I hereby certify that this engineering document was prepared by me or under my direct personal supervision and that I am a duly licensed Professional Engineer under the laws of the State of Iowa.

Chin-Ta Tsai 01/05/2009

Signature Date

CHIN-TA TSAI

Printed or Typed Name

My license renewal date is December 31, 20 09

Pages or sheets covered by this seal: S.1-S.3

U.S. HIGHWAY 169
STREAM MITIGATION
GENERAL LAYOUT

ENGLISH	IOWA DOT	DESIGN TEAM MARLER\TSAI	HUMBOLDT COUNTY	PROJECT NUMBER NHSN-169-7(44)--2R-46	SHEET NUMBER MIT.1	REVISED

= WETLAND SEEDING (0.125 Acre)

= NATIVE GRASS SEEDING (0.064 Acre)
TO BE SEEDED (BY OTHERS)
EROSION CONTROL CONTRACTOR
NHSN-169-6(81)--2R-94

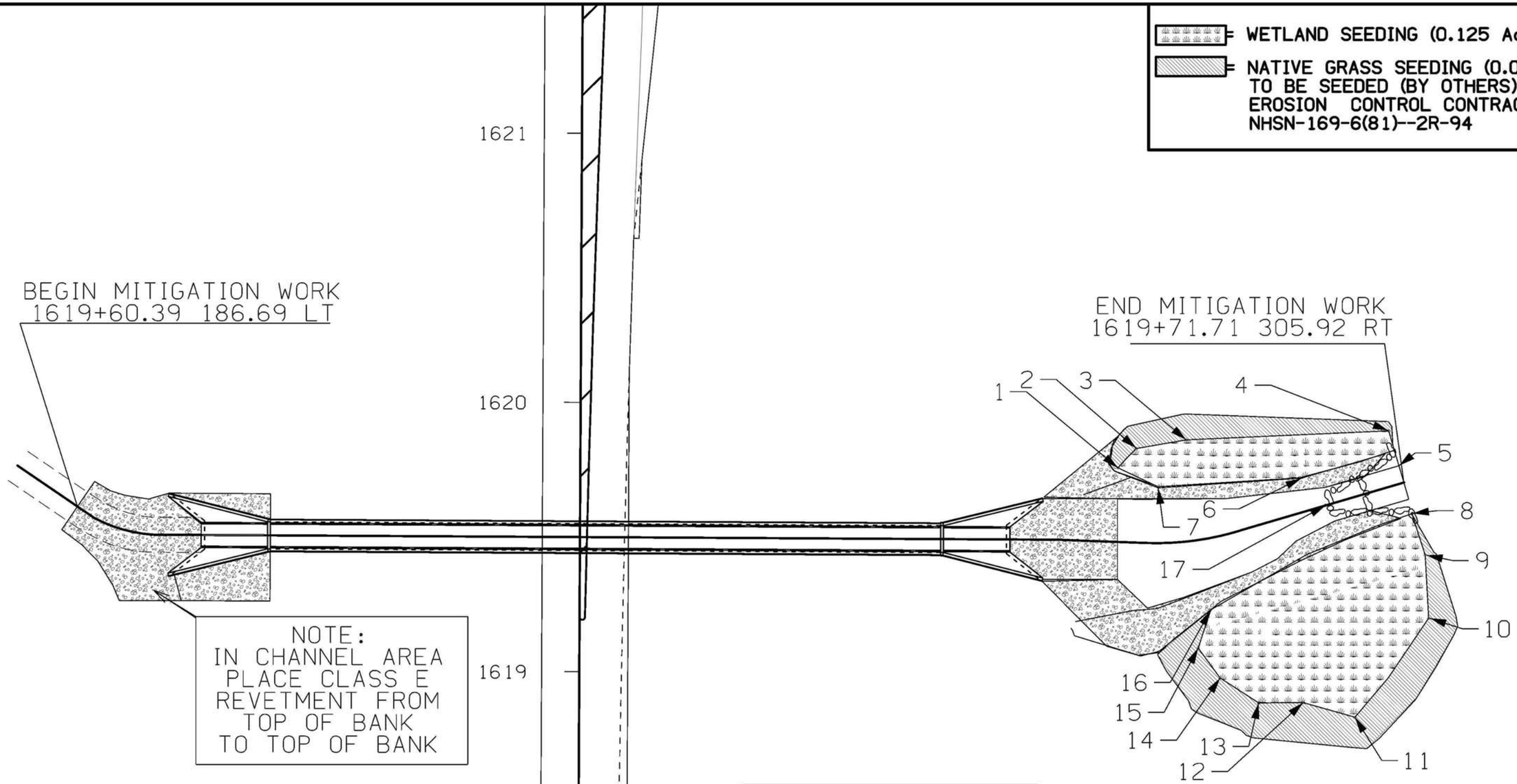

Riparian Bench Station Offset Locations			
Point #	STATION	OFFSET	LT/RT
1	1619+76.72	199.70	RT
2	1619+83.94	206.51	RT
3	1619+87.24	225.00	RT
4	1619+90.97	300.19	RT
5	1619+83.78	302.29	RT
6	1619+73.38	267.19	RT
7	1619+69.78	214.60	RT
8	1619+60.23	308.94	RT
9	1619+44.95	313.95	RT
10	1619+21.49	315.37	RT
11	1618+84.56	288.17	RT
12	1618+89.89	268.91	RT
13	1618+89.71	252.38	RT
14	1618+98.87	238.03	RT
15	1619+09.94	229.83	RT
16	1619+24.19	234.44	RT
Cross Vane Station Offset Location			
17	1619+63.19	277.02	RT

0 FEET 20

N

U.S. HIGHWAY 169
STREAM MITIGATION
SURVEY AND SEEDING LAYOUT

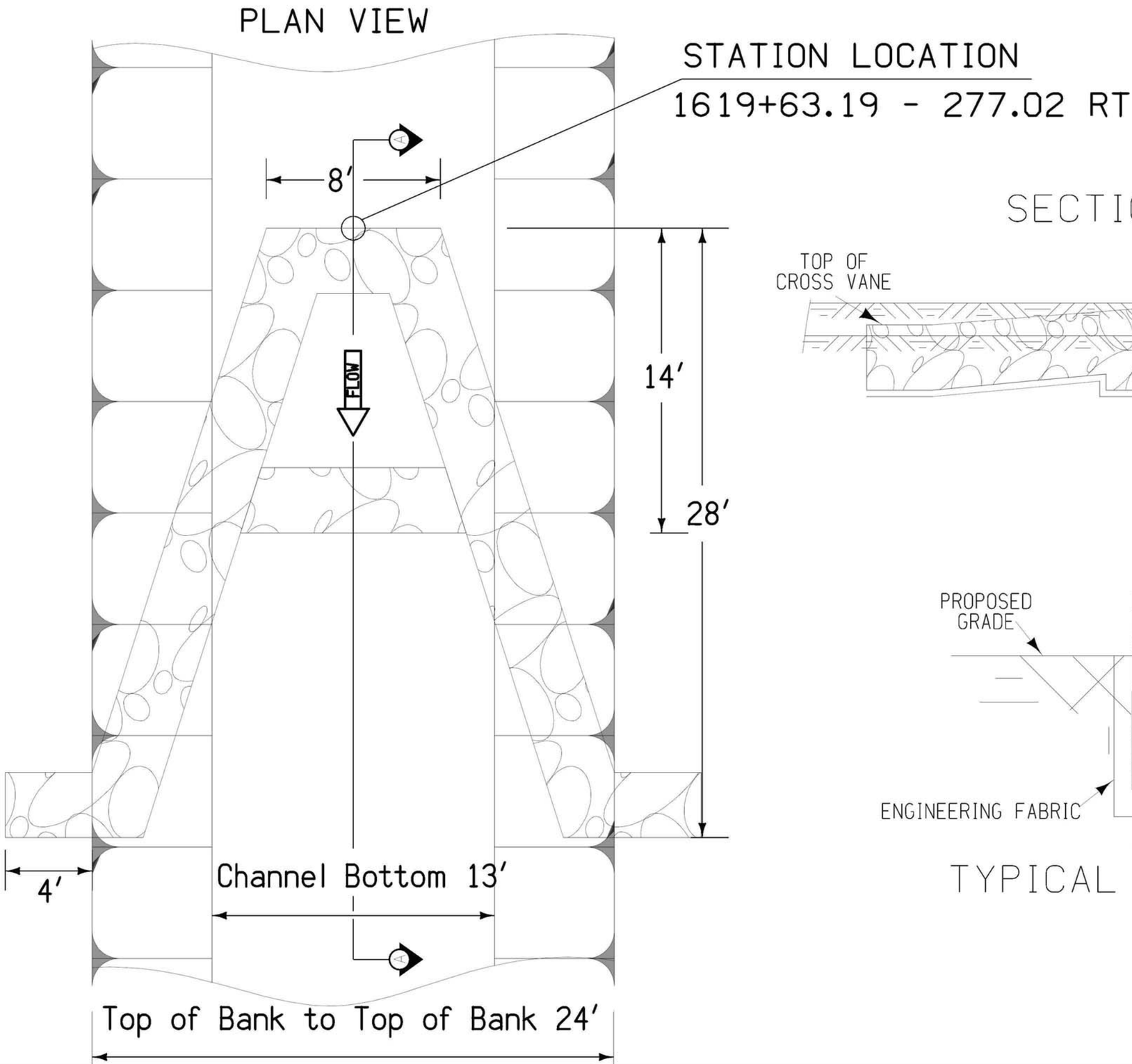

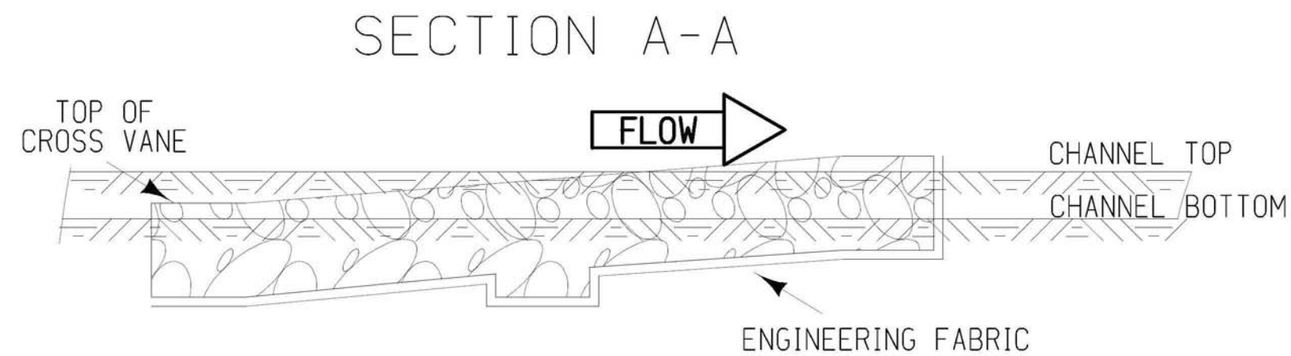

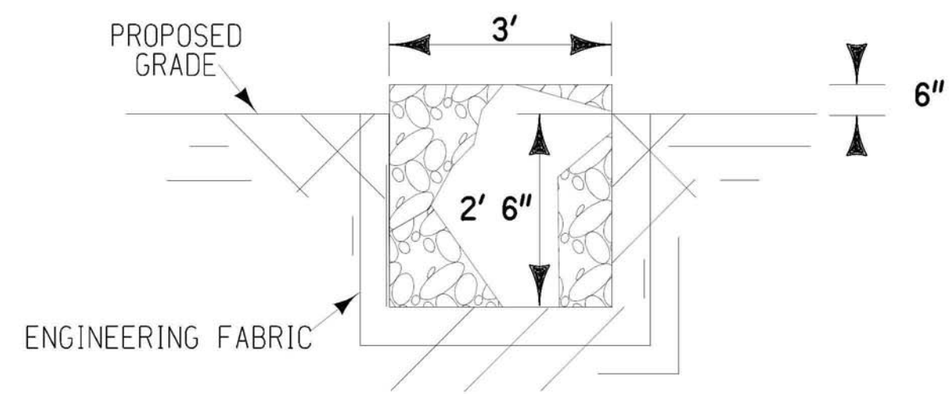

TYPICAL CROSS SECTION

U.S. HIGHWAY 169
STREAM MITIGATION
CROSS VANE DETAILS

ENGLISH	IOWA DOT	DESIGN TEAM MARLER\TSAI	HUMBOLDT COUNTY	PROJECT NUMBER	NHSN-169-7(44)--2R-46	SHEET NUMBER MIT.3	REVISED