Example Problem 6D-1_4: Signalized Ramp Terminal Connection

Determine if the separation barrier and chain link fence restricts intersection sight distance for a right turn maneuver.

Given:

Ramp intersecting a 4-lane urban roadway

Design speed of the 4-lane roadway = 40 mph

Separation barrier height = 2 feet 10 inches

Design vehicle – passenger car

Signalized intersection

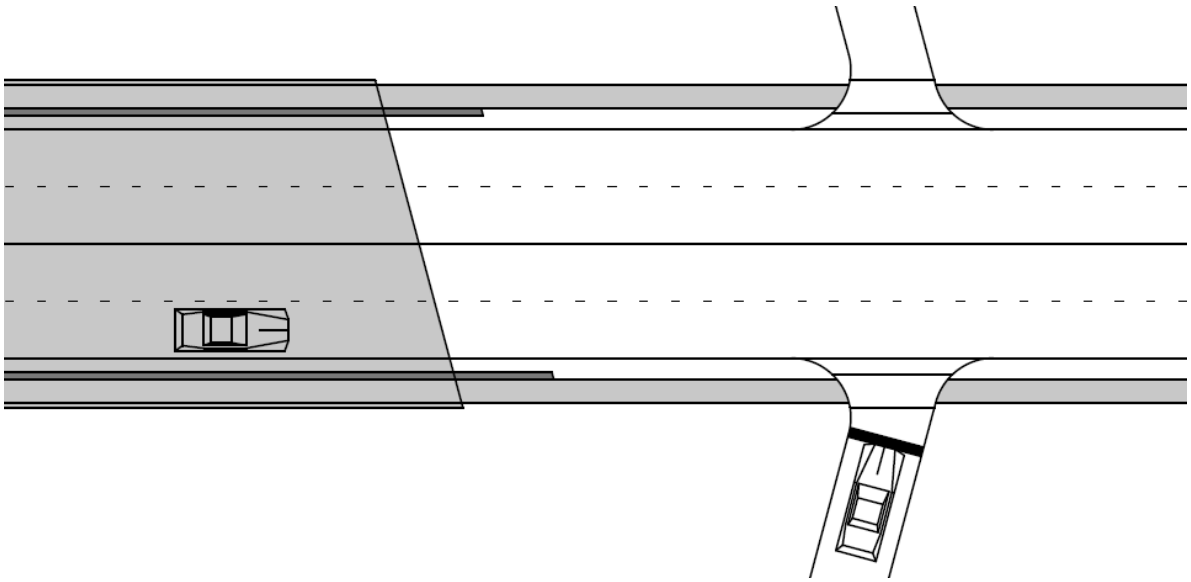

Figure 1: Intersection with possible sight distance restriction.

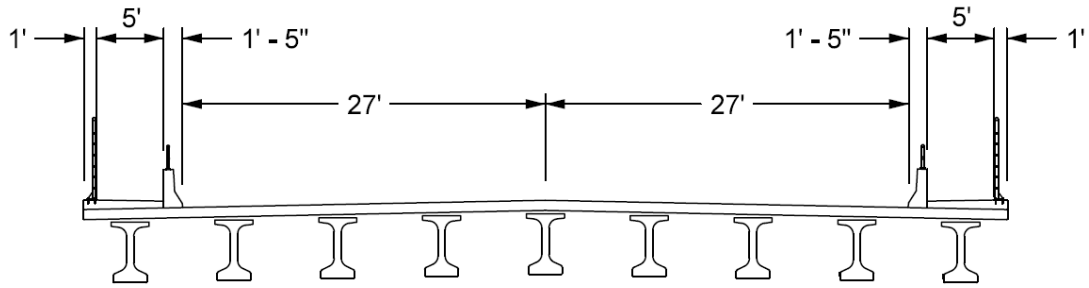

Figure 2: Bridge cross section.

Solution:

1. Using a time gap acceptance value from Table 3 and Equation 6D-1_4, determine the required intersection sight distance:

$$L = 1.47 \times 40 \times 7.0 = 411.6 \text{ ft} \approx 415 \text{ ft}$$

2. Construct departure sight triangle:

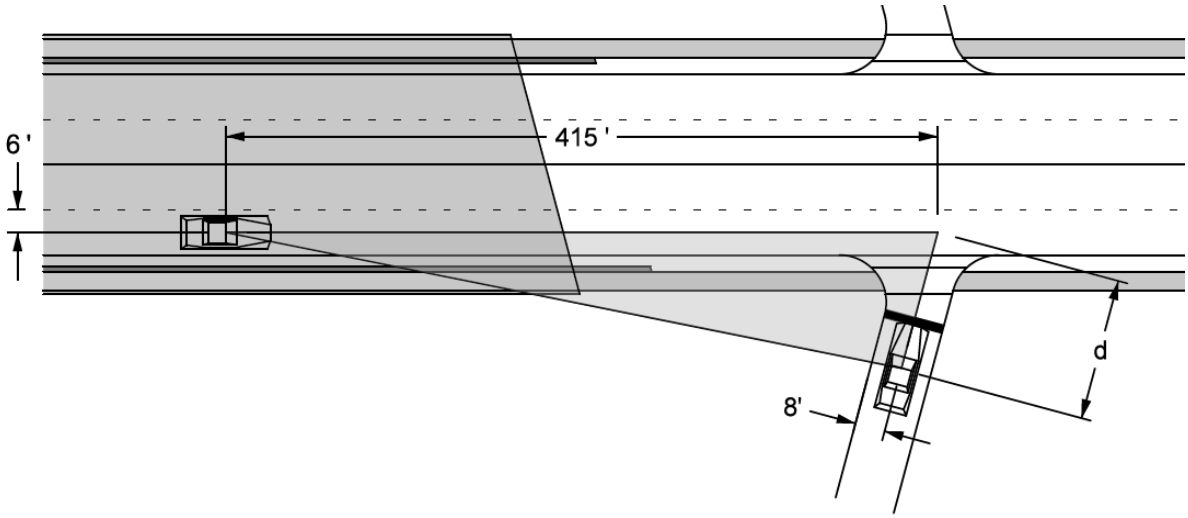

Figure 3: Sight triangle at skewed intersection.

Note: Legs of the oblique triangle will lie upon the intersection approaches as shown in Figure 3. For intersections with sidewalks, dimension d (shown in Figure 3) needs to account for the crosswalk, stop bar, and distance between the crosswalk and stop bar (see Figure 4). Refer to the MUTCD or Chapter 3 of the Traffic Safety Manual for guidance on spacing between transverse pavement markings.

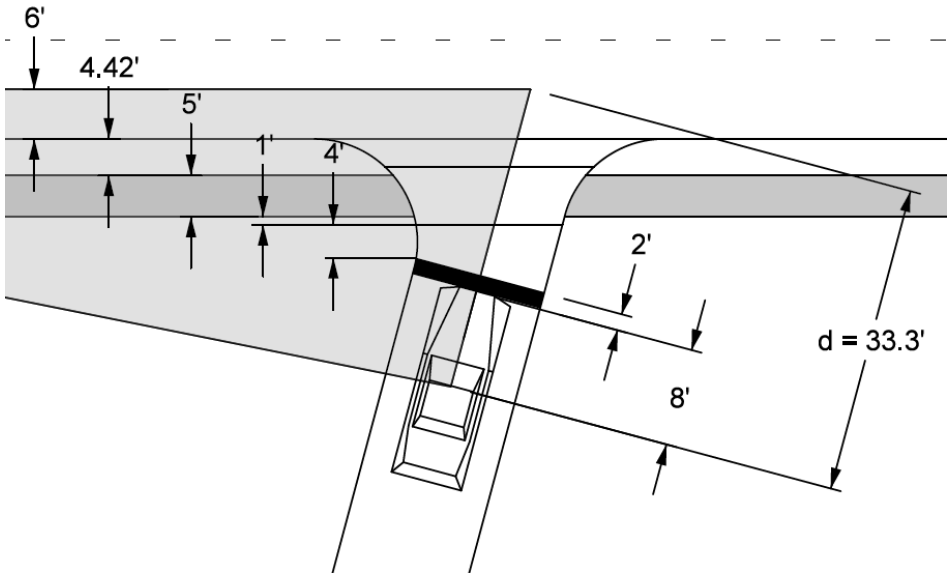

Figure 4: Dimension d.

As shown in Figure 3, the barrier rail and chain link fence fall within the sight triangle.

Note: Chain link fence is opaque when viewed at angle.

3. Move the vertex to 18 feet from the edge of the through roadway (i.e. the driver moves forward to improve sight distance):

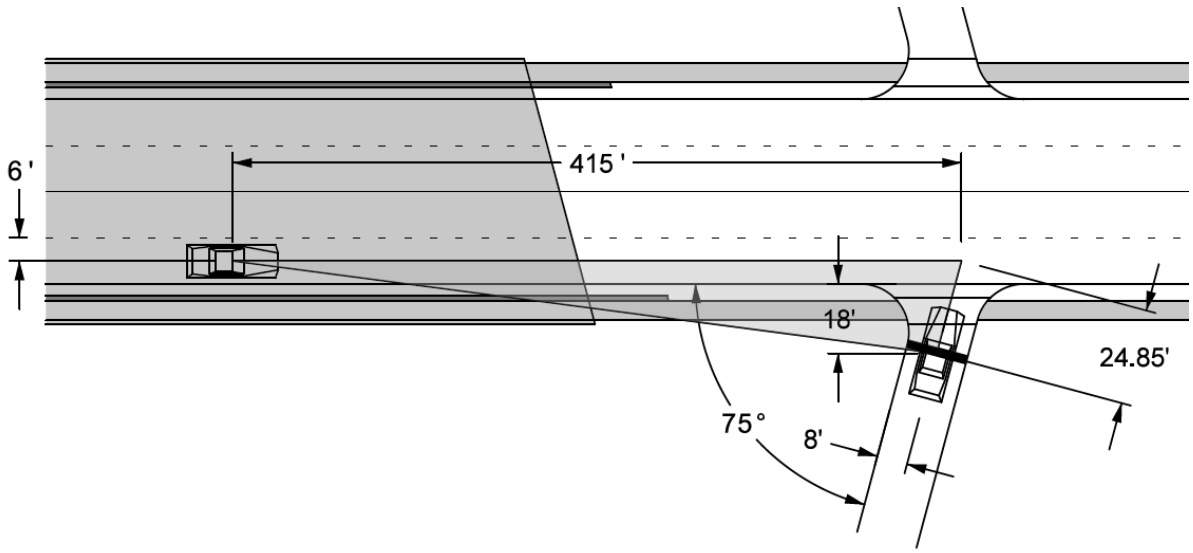

Figure 5: Sight triangle with vertex 18 feet from through roadway.

Dimension d in this case can be determined by:

$$d = \frac{18+6}{\sin 75°} = 24.85 \text{ ft}$$

As shown in Figure 5, the barrier rail still falls within the sight triangle, even with vehicle closer to the through roadway.

4. Calculate the elevations of the drivers and potential obstructions:

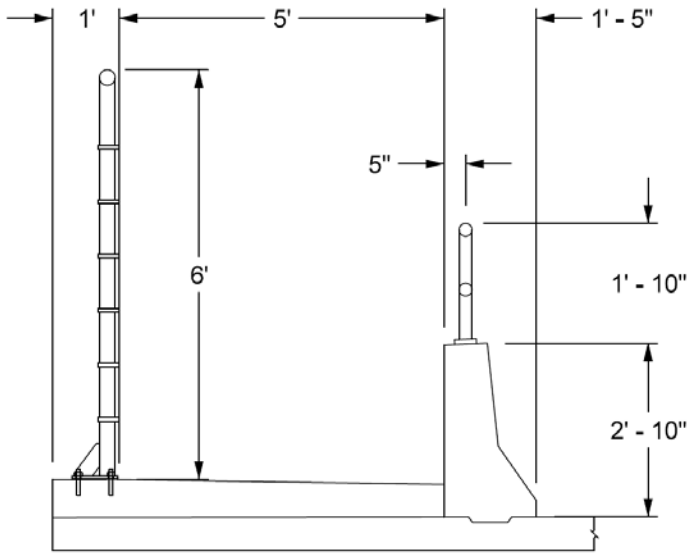

Figure 6: Cross section through sidewalk.

Elevation of the driver on the local road (minor road):

$$Elev_{h1} = 681.65+3.5 = 685.15 \text{ ft}$$

Elevation of the driver on the two-lane highway (major road):

$$Elev_{h2} = 687.18+3.5 = 690.68 \text{ ft}$$

Elevation of the top of barrier rail varies from 686.34 to 685.69 feet.

Elevation of the top of pedestrian hand rail varies from 688.17 to 687.52 feet

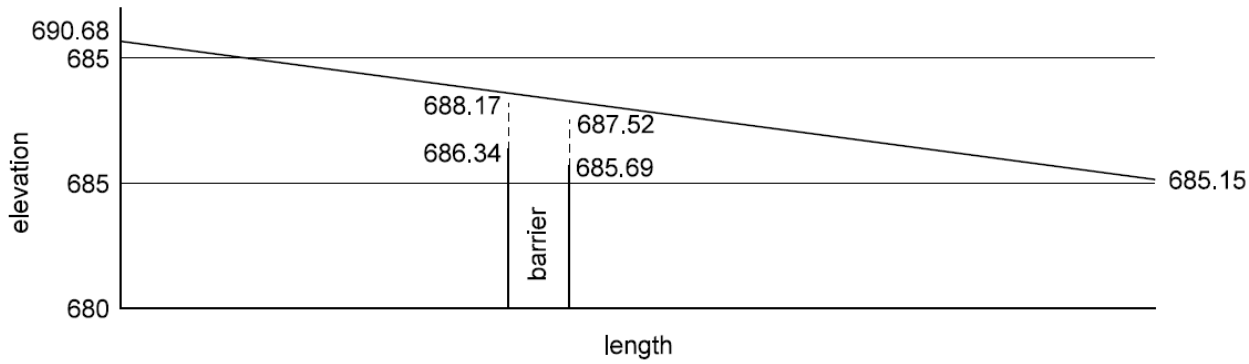

Figure 7: Vertical sight line.

> **Note:** Pavement surface elevations can be determined from survey .tin files, design files, or construction plans.

The height of the barrier rail and pedestrian hand rail is not a sight obstruction.

Discussion

If the barrier rail were a sight obstruction, the barrier rail could be moved to the outside of the bridge where the chain link fence is shown in Figure 6, or a sign restricting right turns during a red phase could be added.

If the pedestrian rail were a sight obstruction, the pedestrian rail could be removed.