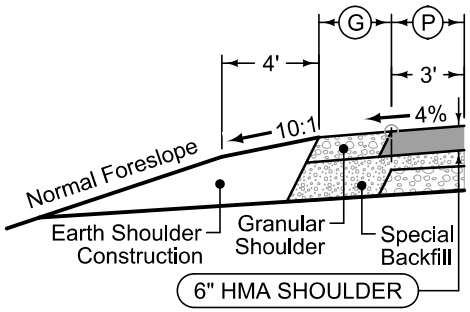

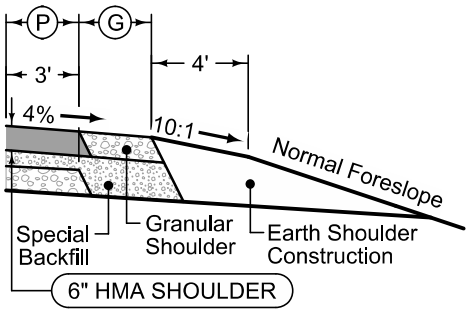

Auxiliary Lane
Combination Shoulder

Shoulder Jointing:
Longitudinal joint: B

2_AL_Shldr_C_
04-15-14

P Feet	G Feet