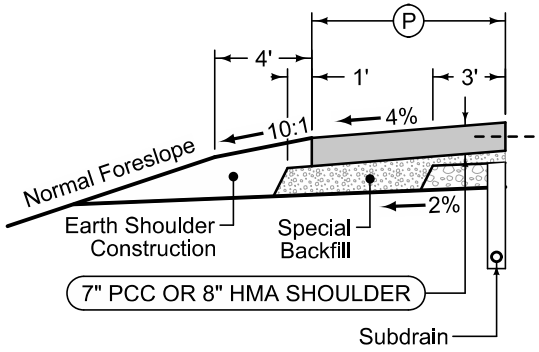

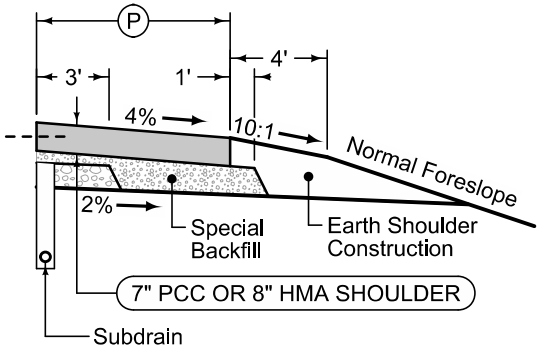

Paved Shoulder Alternates

PCC Shoulder Jointing:
Longitudinal joint: BT-1 or BT-5
Transverse joints: C at 20' spacing
HMA Shoulder Jointing:
Longitudinal joint: B

2_P_ALT_ 10-21-14		
STATION TO STATION		P Feet