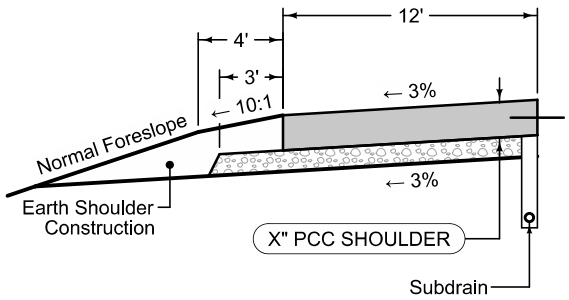

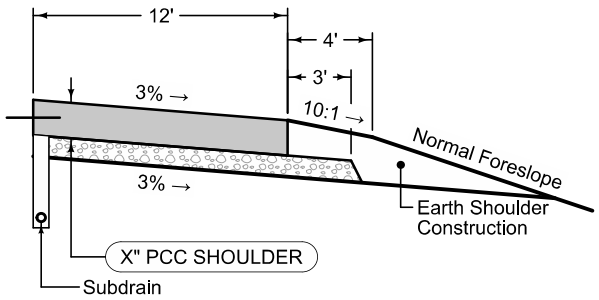

Full Depth PCC Shoulder

Shoulder Jointing:
Longitudinal joint: L-2 or KT-2
Transverse joints: C at 20' spacing

6D_Dprs_P_FullPCC_
04-19-11

Direction of Travel	BEGIN STATION	END STATION