2607
10-02-01

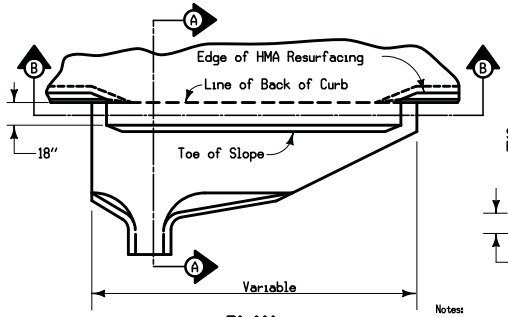

PLAN

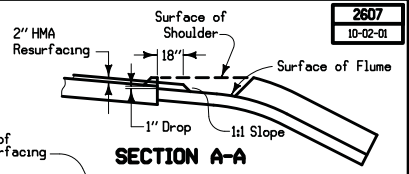

SECTION A-A

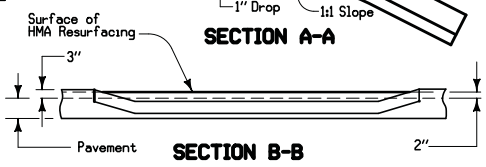

SECTION B-B

Notes:

Drawing shows Type "A" flume; details will be similar for other types of flumes or when necessary, modified as directed by the Engineer.

Design rate for Hot Mix Asphalt is 0.53 tons per flume.

TYPICAL DETAILS OF RESURFACING THROUGH FLUME