Iowa Highway Research Board
Project HR-175
Construction Report

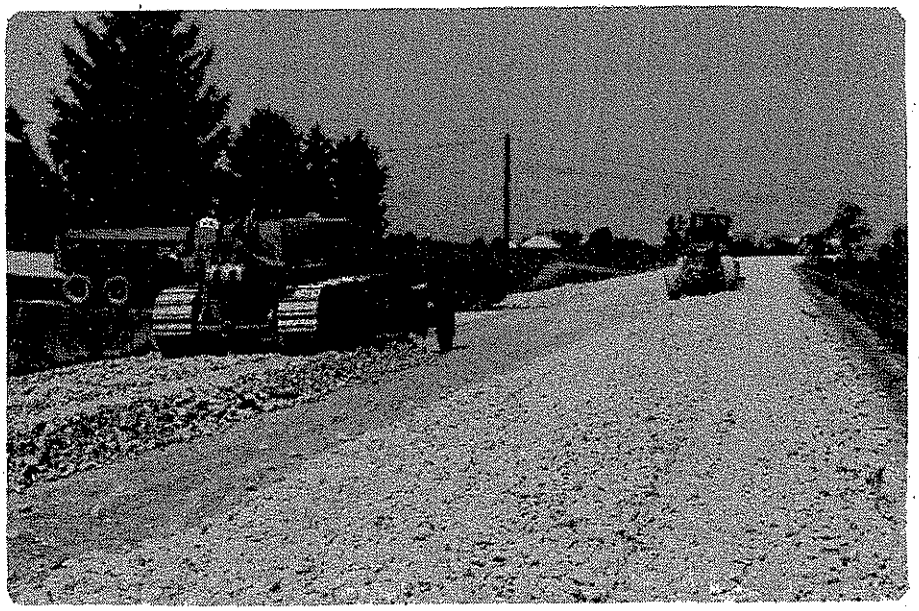

EXPERIMENTAL MACADAM STONE BASE DES MOINES COUNTY

September 1977

Disclaimer

The opinions, findings and conclusions expressed in this publication are those of the authors and not necessarily the official views or policy of Des Moines County or the Iowa Department of Transportation. This report does not consitute a standard, specification or regulation.

IOWA HIGHWAY RESEARCH BOARD

HIGHWAY DIVISION

IOWA DEPARTMENT OF TRANSPORTATION

PROJECT HR-175

CONSTRUCTION REPORT

EXPERIMENTAL MACADAM STONE BASE
DES MOINES COUNTY

BY

ROGER A. LESS
IOWA DEPARTMENT OF TRANSPORTATION

AND

CHARLES K. PAULSON, P.E.
DES MOINES COUNTY ENGINEER

SEPTEMBER 1977

TABLE OF CONTENTS

Introduction	1
Proposed Research	1
Objectives	3
Project Location and Layout	3
Material	6
Drainage System	8
Macadam Base Construction	9
Chokestone	11
Evaluation	13
Conclusions	18
Recommendations and Summary Evaluation	18
Acknowledgements	20
Appendices	21
Appendix A-Special Provisions	
Appendix B-Typical Cross Sections and Construction Summary	

MACADAM STONE BASE
DES MOINES COUNTY

INTRODUCTION

In today's era of advanced methods, it is interesting that a centuries-old Roman road-building concept can be the most attractive alternative available. The need for a less expensive road base construction method is very apparent, especially to the county engineer faced with maintaining quality lower traffic volume farm-to-market roads.

The revival of the Macadam stone base is one possible solution. Des Moines County believed a Macadam road had excellent possibilities for their particular needs. They proposed a research project designed to eliminate some of the unknown factors of Macadam stone base construction. It is the intent of this research project to develop standardized design procedures and serve as an aid for others in constructing a Macadam base roadway. The Iowa Department of Transportation has published special provisions for the construction of Macadam stone bases that were adopted as the guideline specifications for the research project (Appendix A).

PROPOSED RESEARCH

The proposed research in Des Moines County involves the construction of the experimental Macadam stone base, which is composed of

one or more compacted layers of large stone particles having a maximum size of four inches and a minimum size of one inch. A layer of smaller size stone having a maximum size of one inch is then placed on top of the larger stone and compacted into the openings between the larger stone. (Figure 1) The result is a firm stable crushed stone base with a chokestone layer on top. The surface for the project is to be a double application of asphalt-aggregate seal coat.

(Figure 1)
Side view of 4" stone and chokestone

The experimental features include variations in the thickness of the Macadam base from 4 inches to 10 inches with 2 inches of chokestone, variation in the placement and type of lateral drainage systems and alternating sections of Macadam or earth shoulder construction. An additional experimental feature is

provided by the existence of two slightly different types of soil having different support and drainage characteristics.

OBJECTIVES

The main objectives of the research project are to seek a more economical method for road construction employing crushed stone and to investigate methods for providing lateral drainage. Other objectives of the project are:

--To determine the best method for construction and volume production of crushed stone

--To evaluate the performance over a period of time

--To evaluate the usage of marginal crushed stone-abrasion not to exceed 50

--To consider the energy conservation

--To compare economic factors.

PROJECT LOCATION AND LAYOUT

Des Moines County Research Project HR-175 called for the construction of 7.996 miles of Macadam Stone Base on Des Moines County Road X-31, (Project No. RS-372(6)--61-29) from Station 0+00 to 261 + 20 then 187 + 71 to 351 + 67 starting directly north of Danville (Figure 2). One additional mile on the north end of the project was also constructed by the county to intersect County Road H-38. This one-mile section is not included in the research project.

First Four-Mile Section (south to north)

a) Soil: Silty clay loam

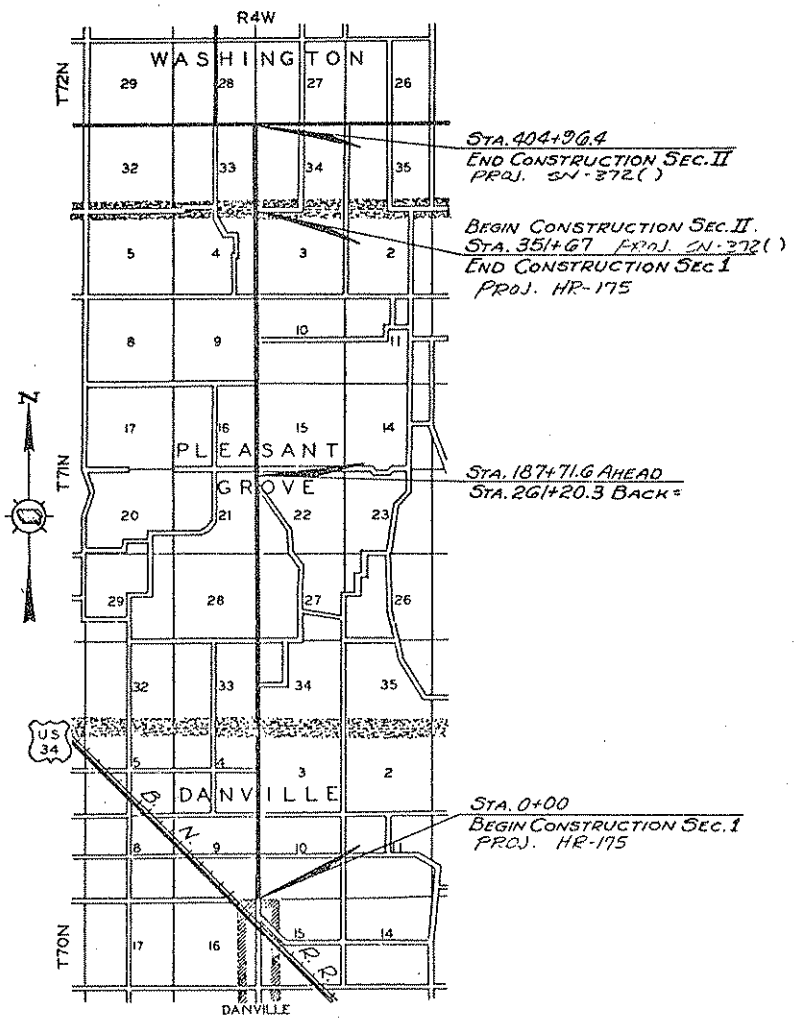

LOCATION MAP

(Figure 2)

b) Topography: Level to gently rolling-capillarity problem, high ground water line

c) Thickness: 1st mile - 6" depth overall

2nd mile - 8"

3rd mile - 10"

4th mile - 12"

Second Four Mile Section

a) Soil: Silt loam

b) Topography: Level to rolling, high fills and deep cut, lower ground water line

c) Thickness: 1st mile - 8" depth overall

2nd mile - 8"

3rd mile - 10"

4th mile - 12"

The importance of an excellent subbase to drain the grade, maintain stability and support the keyed-in Macadam stone should not be overlooked. One six-inch Macadam section was laid over a subbase where an asphalt mat had been removed and reused in the subbase. The rest of the project proceeded along a relocated grade that had been rebuilt one year earlier. The existing gravel farm-to-market roadway had a traffic count of 250 vehicles per day prior to the start of the Macadam construction. Weak spots in the subbase were stabilized by additional road rock. The county also surface spread lignon sulphonate (tree sap) to

serve as a stabilizer, dust palliative and marker dye. Lignon sulphonate leaches when exposed to water and produces a brownish stain which is traceable. Should moisture bleeding occur in the shoulders, lateral drainage in the Macadam base can hopefully be traced by the dye.

MATERIAL

The access to a rock quarry within close proximity is essential to make a Macadam base construction economical. Obviously as the distance between the project and the quarry widens, the costs increase. Usually in Iowa, hauling rock further than 20 miles to a project makes Macadam base construction uneconomical. Limestone base material of two sizes was produced by the Kaser Construction Company at their Mediapolis quarry. Material was obtained from two ledges simultaneously (Burlington and Wassonville), in near equal parts from each ledge. This was done because of high abrasion loss in the upper ledge of Burlington limestone. The two sizes were 4" nominal top size to 1", and 1" to dust. The 4" to 1" material was used as the Macadam stone base and the 1" minus material was used as a chokestone over the base course. The following tabulation shows the range of gradation:

Base Stone - 4 in.

Screens	Range, % Passing
4 in.	100
3 in.	82-92
2 in.	53-66
1 in.	12-26

Chokestone - 1 in. minus

Screens	Range, % Passing
1 in.	100
3/4 in.	92-96
1/2 in.	72-78
3/8 in.	47-64
#4	24-43
8	15-30
16	13-27
30	11-23
50	9-19
100	8-15
200	6-12

The quarry shot material was processed through a Universal 3645 Double Impeller Impact Crusher set to produce a nominal 4" top size material. Then the primary crusher material was screened over a 1" screening deck with the 1" plus material taken by conveyor belt to a stockpile. The stockpile was built in a semi-circle by a radial stacker. This stockpiling operation resulted in some segregation of the base material and would have been better if an articulated radial stacker had been used. The limestone rock used has "A" method freeze-thaw values of 7.1 -13, but is marginal for abrasion loss, in the 43-47 range. The Macadam special provisions stated the chokestone should be the finer material of the crushed 4" stone.

DRAINAGE SYSTEM

One aspect of the research project involved the use of several variations of lateral subdrain tray trenches backfilled with porous material. This tray trench method drains the subsoil of the roadway by providing an aqueduct for excess moisture to escape through. The method has proven successful in minimizing the harmful effects of frost boils, spring thaws and other subsurface drainage problems. Each suspected moisture area in the subbase was assessed individually. By utilizing a three foot soil drill, Edwards Construction Company of Clear Lake, Iowa, obtained the necessary information they needed for the construction of the drainage system. The tray trenches measured 5 foot in depth and 8 inches in width. (Figure 3) Two inch top size gravel with the finer material removed (1.2% passing No. 8 sieve) has been proven to be the best aggregate for the backfill. Two inch crushed limestone was also used. Variations in the placement of the trenches are to be watched closely. Some of the transverse trenches are full width while others are staggered, nine foot from centerline to shoulder in length. A section of 45° angled trenches from the centerline was also constructed. There are a few longitudinal trenches to help especially wet areas.

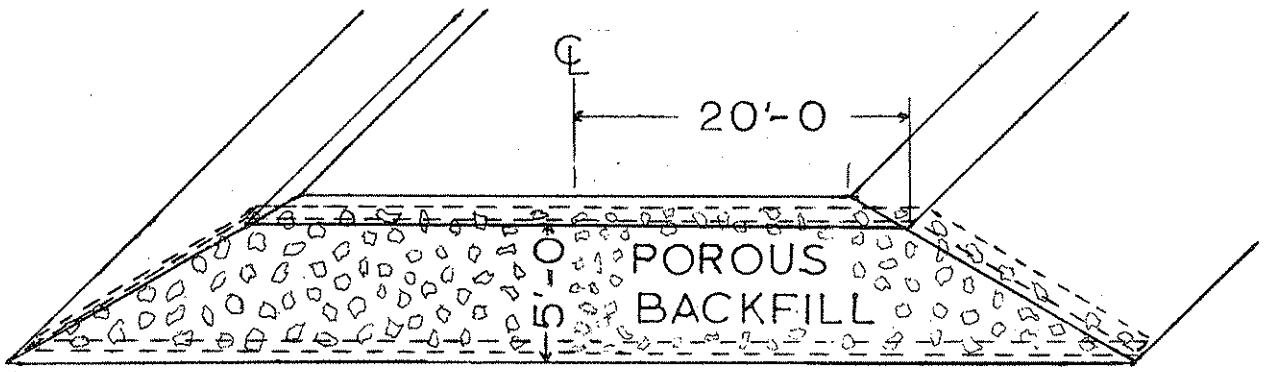

(Figure 3)
Full Width Drainage Trench

MACADAM BASE CONSTRUCTION

The 4-inch top size Macadam base stone was placed with a Jersey Spreader (12.5 ft. wide) mounted on a Caterpiller D-8 Crawler Tractor. The Macadam construction was done by Norris Construction Company of Ottumwa, Iowa. The base stone was placed full depth in one lift as follows:

Design Depth	Loose Depth
4 in.	6 in.
6 in.	10 in.
8 in.	14 in.
10 in.	18 in.

QUANTITIES (28' width)

Total Base	Macadam Stone		Chokestone	
Thickness	Thickness	Tons/mile	Thickness	Tons/mile
8"	6"	4,960	2"	1,670
10"	8"	6,655	2"	1,670
12"	10"	8,365	2"	1,670

The typical cross sections and a construction summary are given in Appendix B. No problems were experienced during spreading. Two adjacent passes, one lift, with the Jersey Spreader placed the 28 ft. width base. The 40 ft. Macadam base required 3 passes with the Spreader. Two outside passes were made first, and then

the third to fill in the middle. Rock hauling trucks did not drive over the rock until it was compacted. A motor grader was used for leveling and shaping prior to compaction (Figure 4). Everyone involved was amazed by how well the blade could lay the stone and how efficiently shaping could be done.

(Figure 4)
Blading the 4" Macadam base stone

A RayGo 404B Vibratory Steel Roller was used for compacting the base material (Figure 5). Three vibratory passes followed by one static rolling was usually adequate. Adequacy of compaction to interlock and seat the Macadam stone was based on the rule-of-thumb that the vibration in the compacted material was felt approximately 40 to 50 feet away from the roller. The compacted density of the 4" Macadam stone was found to be 127 pcf.

(Figure 5)
Vibratory Roller Compacting 4" Stone

The finished Macadam base is a very uniform structure and there is no apparent degradation of the rock, and a negligible amount of crushing by the roller. However, considerable difficulty was encountered in seating and interlocking the thin 4-inch depth base stone. The Macadam base construction was a very efficient operation, with the quantity of base material placed varying from approximately 2900 to 5000 tons per day. The daily yields varied from 80% to 106%.

CHOKESTONE

The chokestone material consisted of the 1" minus material which passed through the screen in the primary crusher. Lime was removed as necessary to obtain the intended gradation for the chokestone. The chokestone was pre-wetted with a spray bar

and then stockpiled by trucks. Pre-wetting retained the fines in the aggregate, eliminated transportation segregation and allowed immediate spreading and rolling on the road. Tailgate spreading was considered, but the county decided to try the Jersey Spreader for the chokestone also. Again, very little difficulty was experienced using the Jersey Spreader to place the stone (Figure 6). However, the amount of chokestone was increased over original design criteria by 50 percent from a loose depth of two inches to three inches. The loss of approximately an inch of material into the voids of the 4-inch Macadam stone was experienced which originally left only an inch for leveling and filling surface dips and voids. The extra inch in depth of chokestone provided ample material to achieve a smooth surface. The vibratory roller compacted the chokestone to a density of 145 pcf.

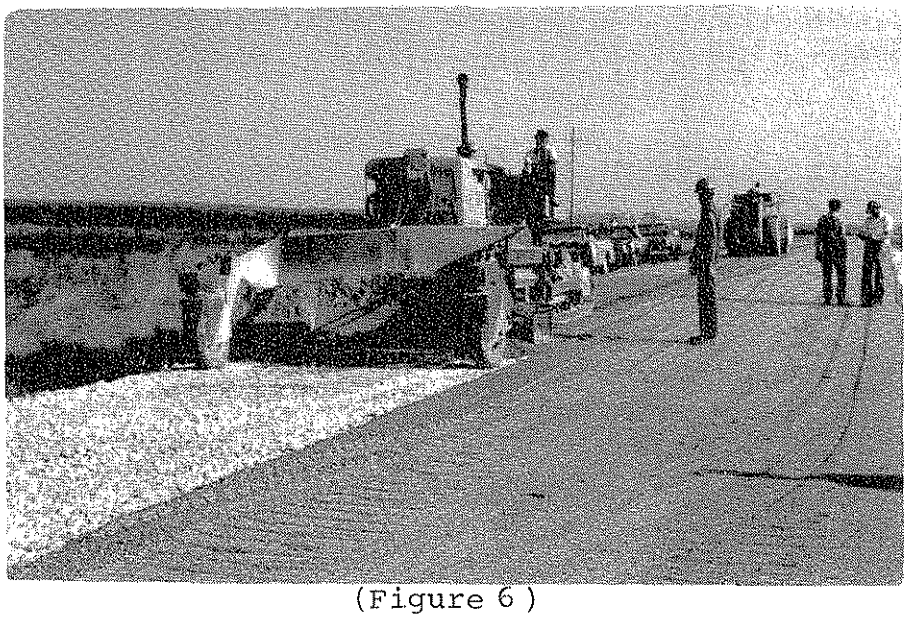

(Figure 6)
Spreading the Chokestone

A tack coat using MC-70 asphalt with a rate of application of 0.20 gal/sq. yd. was sprayed on the chokestone. The roadway was completed by applying a double inverted seal coat using 1/2" limestone chips spread at 25 lbs./sq. yd. and 0.30 gal./sq. yd. of MC-3000 asphalt.

EVALUATION

Deflection testing on the completed Macadam roadway was conducted by using both the Benkelman Beam and Road Rater. The deflection testing of October 21, 1975, used the Benkelman Beam and recorded an overall average of 0.041 inches of deflection. The following spring the testing was done on May 18, 1976. At this time, the road was tested with both the Benkelman Beam (overall average of 0.048 inches) and the Road Rater (overall average of 0.00392 inches, commonly referred to as 3.92 mils). The Road Rater is a dynamic deflection testing device but the number one sensor readings do correlate to the Benkelman Beam readings.

DEFLECTION TESTING
MACADAM BASE COUNTY ROAD NORTH OF DANVILLE (HR-175)
DES MOINES COUNTY

1975 Benkelman Beam (10-21-75)

	No. of Tests	Mean Value (inches)	Std. Dev. (inches)	Coef. Var.	Low Reading (inches)	High Reading (inches)
NB	37	0.038	0.011	29.2	0.018	0.058
SB	16	0.048	0.014	29.7	0.034	0.082
NB&SB	53	0.041	0.013	31.4	0.018	0.082

1976 Benkelman Beam (5-18-76)

	No. of Tests	Mean Value	Std. Dev. (inches)	Coef. Var.	Low Reading (inches)	High Reading (inches)
NB	10	0.045	0.020	44.7	0.028	0.094
SB	9	0.050	0.011	22.2	0.040	0.070
NB&SB	19	0.048	0.016	34.3	0.028	0.094

1976 Road Rater (5-18-76)

	No. of Tests	Mean Value (Mils)	Std. Dev. (Mils)	Coef. Var.	Low Reading (Mils)	High Reading (Mils)
NB	19	3.77	0.85	22.5	2.50	5.60
SB	19	4.06	0.90	22.1	2.90	6.40
NB&SB	38	3.92	0.87	22.3	2.50	6.40

The initial Road Rater readings (3.92 mils average) are indicative of a medium strength road. Higher deflection readings indicate a weaker roadway structure. Later Road Rater testing conducted on June 21, 1975, June 28, 1977, and August 18, 1977, recorded the following:

AVERAGE SENSOR 1 DEFLECTION READING

June 21, 1976

6" Macadam base	4.15 mils
8"	4.92 mils
10"	4.31 mils
12"	4.29 mils

June 28, 1977

6"	4.5 mils
8"	7.0 mils
10"	6.0 mils
12"	4.5 mils

August 18, 1977

6"	4.76 mils
8"	5.57 mils
10"	4.89 mils
12"	4.76 mils

The lower deflection readings for the 6" depth section are understandable since the old asphalt road makes for a substantially stronger subbase than found on the rest of the project. The French type trench drains, although difficult to evaluate, have been doing an adequate job. As of this time, it is interesting to note that several trench drains placed in an especially wet conglomerate soil area are bleeding moisture and the above roadway is stable.

Many breakups and failures in the road surface have occurred as the end of the second year of service approaches. Much of the deterioration has been very recent. A few of the failures have been in the shoulders of the southbound lane where 40 foot wide, 6" and 8" Macadam base was used. The failures appear to have been caused by loaded grain trucks running their outside wheels on the shoulder. The macadam base is losing its interlock due to the inadequacy of the subbase under the shoulder. A centerline and edgelines have recently been painted on the road. These markings seem to have moved traffic into the center and off the shoulders, thus reducing failures. The high-fill new grade located north of the bridge has become rough, corrugated, and is starting to rut. This condition exists here due to not having a sufficiently stable subgrade. One other problem area was apparent even during construction. The cause for failure here can be linked directly to the subbase also.

Numerous other breakups have been occurring, especially in 6" and 8" sections. It appears that once the Macadam stone interlock is broken, rapid deterioration occurs. Des Moines County has put a number of asphalt patches on the roadway this past summer. They are serving both as repair work and as preventative maintenance. An August 16, 1977 summary of patches and depression rutting with regard to thickness is:

6" 3 patches and 2 depr.	8" 10 patches and 1 depr.
8" 8 patches	8" 4 patches and 2 depr.
10" 1 patch	10" 1 patch and 1 depr.
12" No patches	12" No patches.

Each of the above sections is one mile in length. Twenty-one of these patches occurred in the southbound lane and six in the northbound land. It should be remembered, the southbound lane is where the trucks are hauling grain. Of the areas that are patched, 15 occurred in the 40 foot wide sections and 12 occurred in the 28 foot sections.

The performance of the different design depths was initially above expectation. However, it is beginning to appear that the 6" and 8" depth bases are under-designed. Des Moines County is of the impression that the 10" design will perform satisfactorily with an adequate subbase and their 12" design is presently serving satisfactorily.

As of today, a 10" - 12" Macadam stone base (8-10 inches of 4" stone with 2 inches of chokestone), 28 foot wide with earth

shoulders appears to be the best design for this particular farm-to-market road.

(Figure 7)
Completed 40 foot Section (35' top)

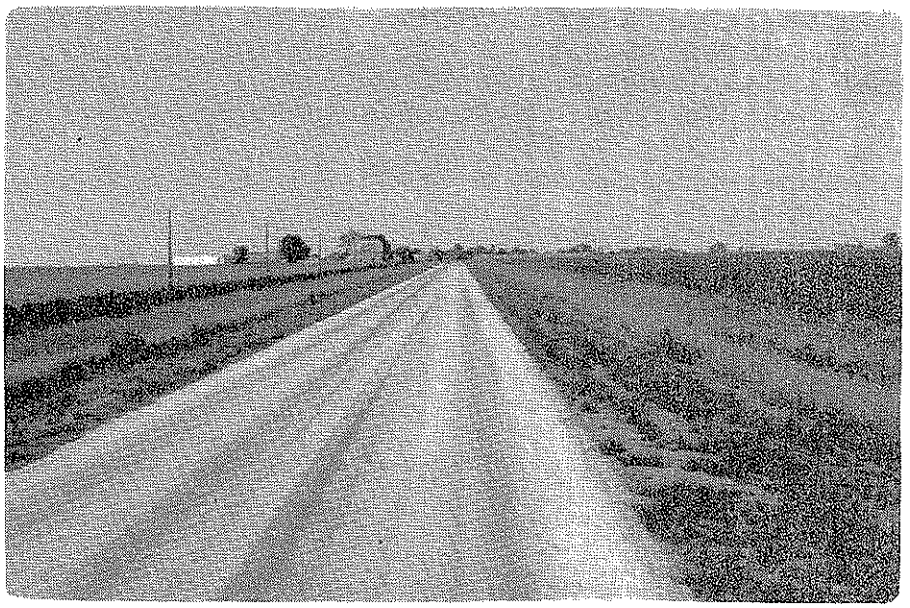

(Figure 8)
Completed 28 foot section (26' top)

CONCLUSION

Des Moines County has kept a close watch on the road and it has surpassed their expectations. The objectives as stated have been met.

The lateral drainage systems are working.

Efficient construction methods have been found.

The marginal crushed limestone aggregate is performing satisfactorily.

A small amount of equipment was needed for the construction, thus conserving energy.

The project resulted in high economical use of the aggregate.

And most importantly, the Macadam base road has performed favorably with concrete and asphalt roads costing over twice as much to build. The average cost per mile of the 9.003 mile Des Moines County Macadam road was $44,998.02. For the research project standpoint, the Macadam project was very successful and didn't have many of the problems usually associated with research projects.

RECOMMENDATIONS AND SUMMARY EVALUATION

The research project has shown that the aggregate used in Macadam construction does not have to be of the highest quality. The marginal limestone used in Des Moines County is serving quite adequately. The slightly elongated shape of the 4" stone used in the base appears to enhance a strong interlock key-in when compacted. Although only 4" stone was used in this project,

further research on the use of 6" stone is recommended.

Even though the 2" chokestone layer is performing satisfactory and was an efficient construction method, research on the use of a thin asphalt mat wearing surface placed directly on top of the Macadam base is recommended. In order to improve the load bearing ability of the road structure and also reduce the amount of aggregate used for the chokestone, it is recommended that an open grade asphalt mix be used. This "popcorn mix" will seal off the Macadam stone base. A 1½" mat should be placed on top of the "popcorn" layer.

The lateral trench drains are serving effectively to eliminate any excess moisture in the base and subgrade. Although not sufficient information has been collected or observed to compare the performance of the two different types of porous backfill, the 2" gravel is the recommended material.

The construction methods and equipment used during the research project work efficiently. The use of a D-8 or larger caterpillar on the Jersey Spreader is advisable. The larger Caterpillars do a much more uniform and even spread of the Macadam stone resulting in the need for less blading. Some segreation was experienced in sections where it took several motor patrol passes to level the stone. It was felt that an electronically controlled motor patrol could improve the riding quality of the road.

Conservation of material and energy resulted in a very economical project. All fractions of the crushed limestone could be used in the construction. Also, a small amount of equipment was needed during the construction period of 50 work days.

ACKNOWLEDGEMENTS

This research project was sponsored by the Iowa Highway Research Board, Highway Division, Iowa Department of Transportation.

The Authors wish to extend special appreciation to Iowa D.O.T. Engineers Bernhard H. Ortgies, Champak L. Narotam and Howard L. Konrady for technical assistance. Appreciation is also extended to personnel of the Special Investigations Section, Office of Materials, Highway Division, Iowa D.O.T. for testing of the structural capabilities and to District #5 Materials personnel for materials testing.

Appendices

(Special Provisions Continued)

SPECIAL PROVISIONS FOR MACADAM STONE BASE

GENERAL. This work shall involve preparing the subbase, constructing lateral subdrains, furnishing, placing, and compacting a Macadam stone base course and a choke stone base course, applying a prime and a double bituminous seal coat to the finished work, and the construction of earth shoulders, all as required by the plans and these specifications.

PREPARATION OF THE SUBBASE. The subbase shall be prepared by blading and shaping the present subbase to the required cross section as shown in the typical cross section. Rolling shall be done in conjunction with the blading and shaping to maintain uniform density in the subbase.

MACADAM STONE BASE. The Macadam Stone Base shall consist of crushed Stone placed on the prepared subbase and thoroughly compacted, all in accordance with the plans and these specifications.

A. Materials for the Macadam Stone Base shall be the product of crushing limestone or dolomite using the Burlington stone or a combination of the Burlington and Wassonville stone, subject to the approval of the engineer, and meeting the following requirements:

1. Abrasion Loss. The percentage of wear, determined in accordance with AASHO T-96, Grading A or B, shall not exceed 50.
2. Soundness. When subjected to the freezing-and-thawing test, ISHC Laboratory Test Method 211, Method A, the percentage loss shall not exceed 10.
3. Gradation. The material shall be produced by an impact breaker primary crusher with the grates or breaker bars adjusted to produce a maximum size of 4 inches. The material shall be screened over a 1-inch screen. The material retained on the 1-inch screen shall be hauled, spread, and compacted as the Macadam stone base material.

B. Equipment shall comply with 2001.01 and the following requirements:

1. Weighing Equipment. Article 2001.07 shall apply.
2. Compaction Equipment. A self-propelled vibratory roller shall be used to compact the Macadam stone base. Article 2001.05F shall apply. Other types of rollers complying with article 2001.05B, C and D may be required, at the direction of the engineer, to obtain the desired surface.
3. Spreading Equipment shall be capable of uniformly spreading base material to the required thickness.
4. Motor Patrols. Article 2001.15 shall apply.

C. Construction. Macadam stone base shall be constructed on the corrected subbase in accordance with the following requirments:

1. Spreading Base Material. Article 2208.04C shall apply, except this material shall not be wetted.
2. Compaction. Promptly after the material has been spread, it shall be compacted to stabilization. Compaction shall continue until the base material is interlocked and seated.

D. Fillets for Intersecting Roads, Drives, and Turnouts shall be constructed in accordance with the plans and these specifications.

E. Maintenance of Completed Base. Article 2205.12M shall apply.

(Special Provisions Continued)

CHOKE STONE BASE. The Choke Stone Base shall consist of crushed stone placed on the Macadam Stone Base and thoroughly compacted and primed with a bituminous primer, all in accordance with the plans and these specifications.

A. Materials for the choke stone base shall be the product of crushing limestone or dolomite meeting the following requirements:

1. Quality. Choke Stone Base material shall be from the source used for the Macadam Stone Base course material, a product of that operation.
2. Gradation. The material shall be produced by an impact breaker primary crusher with the grates or breaker bars adjusted to produce a maximum size of 4 inches. The material shall be screened over a 1-inch screen. The material passing the 1-inch screen shall be further processed as necessary to meet the following gradation requirements when tested by means of laboratory sieves:

Sieve Size	Percent Passing
#1	97-100
#8	30

This material shall be hauled, spread, and compacted as the choke stone base material.

3. Primer Bitumen shall be MC-70 meeting requirements of Section 4138.

B. Equipment shall comply with 2001.01 and the following requirements:

1. Weighing Equipment. Article 2001.07 shall apply.
2. Compaction Equipment. Article 2001.05F shall apply with the addition of a smooth-faced, steel roller, meeting requirements of 2001.05B, for the final rolling.
3. Equipment for Cleaning the Base. Article 2001.14 shall apply.
4. Equipment for Heating the Bitumen. Article 2001.11 shall apply.
5. Equipment for Distributing Bitumen. Article 2001.12 shall apply.
6. Equipment for Applying Water. Article 2001.12 shall apply.
7. Prewetting Equipment. Article 2001.09 shall apply if prewetting is done.
8. Spreading Equipment shall be capable of uniformly spreading base material to the required thickness.
9. Motor Patrols. Article 2001.15 shall apply.

C. Construction. Choke stone base shall be constructed on the Macadam Stone Base in accordance with the following requirements:

1. Delivery of Base Material. The material may be prewetted before delivery to the Macadam stone base. The engineer may control the rate of delivery of material to reduce the time material will remain on the base in an uncompacted condition to the practical minimum.
2. Moisture Content. If the material is prewetted before delivery, or if water is added after delivery to the base, water shall be uniformly distributed throughout the material so that all particles are uniformly wet. The amount of water shall be within 2.0 percentage points of the amount determined as field optimum to produce maximum density together with stability with the field compaction procedure. This moisture content will usually be 85 to 90 percent of the optimum determined according to Laboratory Test Method 103. This moisture content shall be maintained in the material until compaction of the base has been completed.

(Special Provisions Continued)

3. Spreading Aggregate. Article 2208.04C shall apply.
4. Compaction. Promptly after the material has been spread, it shall be thoroughly and uniformly compacted by three passes of a vibratory roller meeting requirements of 2001.05F. During the compaction process, such wetting, shaping, and edge trimming shall be performed as may be necessary to insure proper compaction and to achieve the required profile, crown, cross section, and edge alignement. An additional final rolling with a smooth-faced, steel roller will be required. The finished surface of the base shall be free from irregularities and loose material and shall have a smooth-riding surface.

D. Fillets for Intersecting Roads, Drives, and Turnouts shall be constructed in accordance with the plans and these specifications.

E. Priming Base Course and Subgrade. Article 2205.14 shall apply to priming of the base course and the adjacent subgrade.

F. Maintenance of Completed Base. Paragraph 2205.12M shall apply.

G. Winter Seal. Article 2205.15 shall apply.

METHOD OF MEASUREMENT. The quantities of the various classes of work involved in the construction of accepted portions of the base will be measured by the engineer as follows:

A. Preparation of Subbase. The length of subbase prepared in accordance with the specifications will be measured in miles on the surface, along the centerline of the subbase.

B. Macadam Stone Base will be measured in tons computed by the engineer from weights of individual truck loads, and will include base material for fillets at intersecting roads, drives, and turnouts.

C. Choke Stone Base will be measured in tons computed by the engineer from weights of individual truck loads, including free moisture in the material at the time of delivery, and will include base material for fillets at intersecting roads, drives, and turnouts. Moisture added after delivery of the material to the roadbed will not be measured for payment.

D. Primer or Tack-Coat Bitumen. Paragraph 2307.06B shall apply.

BASIS OF PAYMENT. For the performance of the various classes of work involved in construction of the base, measured as provided above, the contractor will be compensated as follows:

A. Preparation of Subbase. For the miles of subbase prepared, the contractor will be paid the contract price per mile.

B. Macadam Stone Base. For the number of tons of Macadam Stone Base placed, the contractor will be paid the contract price per ton.

C. Choke Stone Base. For the number of tons of Choke Stone Base placed, the contractor will be paid the contract price per ton.

D. Primer and Tack-Coat Bitumen. For the number of gallons of primer or tack-coat bitumen measured for payment, the contractor will be paid the contract price per gallon. Article 1109.03 shall not apply to this item.

This payment shall be considered full compensation for furnishing all materials, including water, and for all operations involved in the construction of the base and not paid for in other items.

A-3

LATERAL SUBDRAINS. The lateral subdrains shall consist of the construction of trench drains as shown on the plans and backfilled with a porous backfill material.

A. Material for porous backfill will be furnished by the County at the Sullivan Slough quarry.
B. Equipment. A mechanical trencher capable of constructing a trench 8 inches wide and to the depth specified on the plans shall be required.
C. Construction. Lateral subdrains shall be constructed as indicated on the plans. Any excess excavated material shall be disposed of as directed by the engineer.
D. Method of Measurement. The length of lateral subdrains specified, properly placed, will be measured in feet along the centerline of the drain. Porous backfill material will be measured in tons computed by the engineer from weights of individual truck loads.
E. Basis of Payment. For the number of lineal feet of subdrain trench placed, the contractor will be paid the contract price per foot. For the number of tons of porous backfill material placed, the contractor will be paid the contract price per ton for hauling and placing.

BITUMINOUS SEAL COAT. Section 2307 shall apply.

EARTH SHOULDERS. Earth shoulders shall be constructed along sections of road as indicated on the plans. Articles 2123.02 and 2123.03 shall apply.

A. Materials for earth shoulder construction shall be obtained from the borrow area as shown on the plans.
B. Method of Measurement. For earth shoulders properly constructed and finished, the engineer will measure the amount of excavated material used in cubic yards.
C. Basis of Payment. For earth shoulder construction and finishing, the contractor will be paid the contract price per cubic yard. Payment shall be full compensation for all costs including the cost of excavating, hauling, placing, compacting, rebuilding approaches, finishing work, and costs occaisioned by traffic.

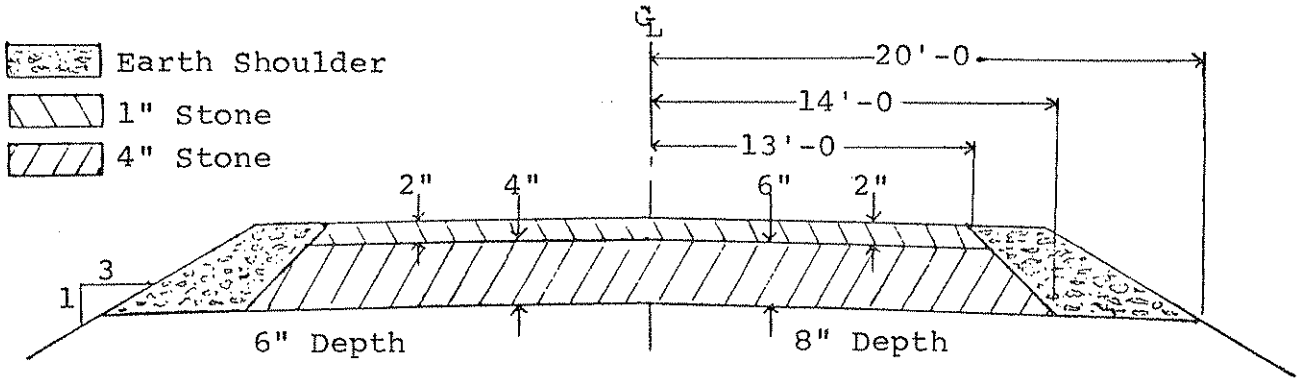

From Sta. 26+67.7 to Sta. 53+28.7

From Sta. 53+28.7 to Sta. 79+80.7
From Sta. 238+69.7 to Sta. 191+74.5
From Sta. 191+74.5 to Sta. 218+47.1

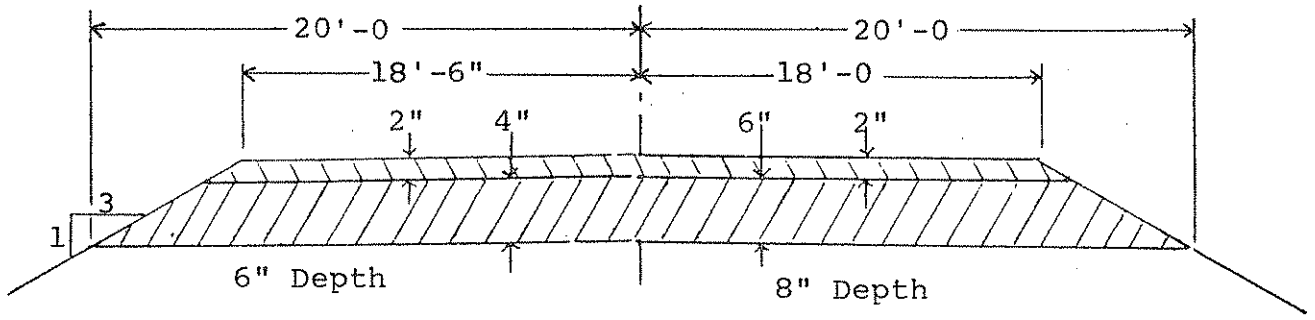

From Sta. 0+00 to Sta. 26+67.7

From Sta. 79+80.7 to Sta. 105+68
From Sta. 218+74.1 to Sta. 245+35.6
From Sta. 212+06.2 to Sta. 238+69.7

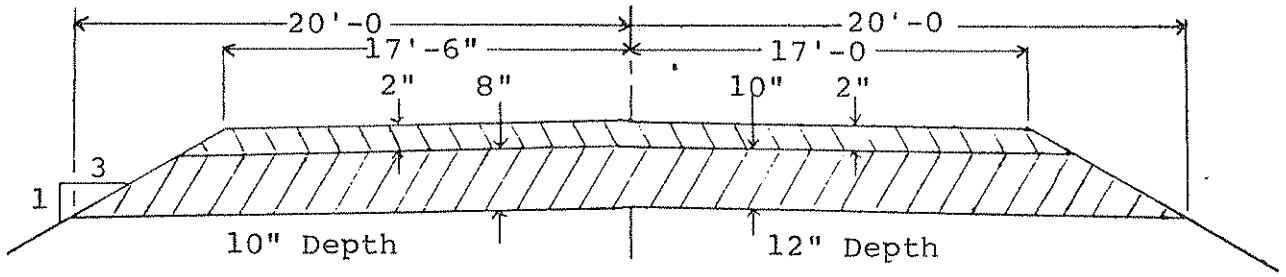

From Sta. 105+68.9 to Sta. 132+33.6
From Sta. 245+35.6 to Sta. 272+15.6

From Sta. 185+55.4 to Sta. 212+06.2
From Sta. 326+61.5 to Sta. 351+67

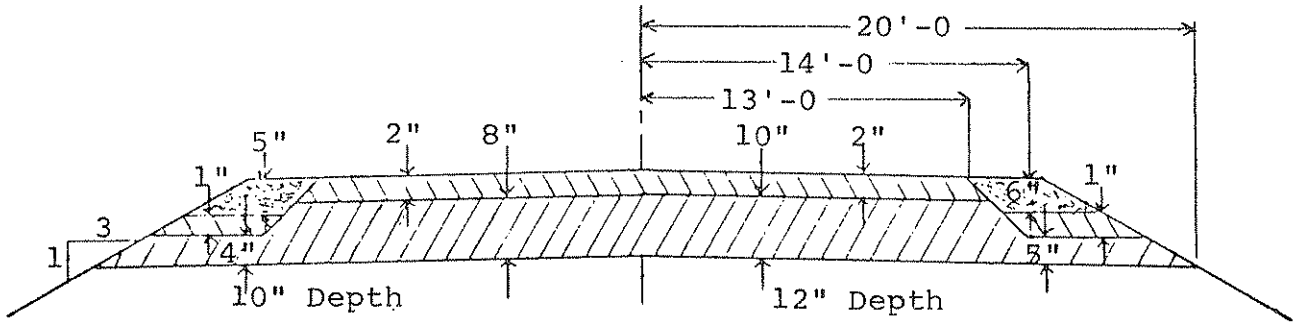

From Sta. 132+33.6 to Sta. 159+00
From Sta. 272+15.6 to Sta. 300+00.5

From Sta. 159+00 to Sta. 185+55.4
From Sta. 300+00.5 to Sta. 326+61.5

Typical Cross Sections

CONSTRUCTION SUMMARY

RESEARCH PROJECT HR-175

EXPERIMENTAL MACADAM STONE BASE--DES MOINES COUNTY

Experimental Sections

Section No.	Station From	Station To	Base Thickness and Width	Shouder Type	Drains
1	0 + 00	26 + 68	6" 40'	Stone	None
2	26 + 68	39 + 98	6" 28'	Earth	Alternate at 100'
3	39 + 98	53 + 29	6" 28'	Earth	Full Width at 200'
4	53 + 29	66 + 55	8" 28'	Earth	Full Width at 200'
5	66 + 55	79 + 81	8" 28'	Earth	Alternate at 100'
6	79 + 81	105 + 69	8" 40'	Stone	None
7	105 + 69	132 + 34	10" 40'	Stone	None
8	132 + 34	145 + 69	10" 28'	5" Earth*	Alternate at 100'
9	145 + 69	159 + 00	10" 28'	5" Earth*	Full Width at 200'
10	159 + 00	172 + 28	12" 28'	6" Earth*	Full Width at 200'
11	172 + 28	185 + 55	12" 28'	6" Earth*	Alternate at 100'
12	185 + 55	212 + 06	12" 40'	Stone	None
13	212 + 06	238 + 70	6" 40'	Stone	None
14	238 + 70	251 + 96	6" 28'	Earth	Alternate at 100'
15**	251 + 96	191 + 75	6" 28'	Earth	Full Width at 200'
16	191 + 75	205 + 10	8" 28'	Earth	Full Width at 200'
17	205 + 10	218 + 47	8" 28'	Earth	Alternate at 100'
18	218 + 47	245 + 36	8" 40'	Stone	None
19	245 + 36	272 + 16	10" 40'	Stone	None
20	272 + 16	300 + 01	10" 28'	5" Earth*	None
21	300 + 01	326 + 62	12" 28'	6" Earth*	None
22	326 + 62	351 + 67	12" 40'	Stone	None

*Earth on top of stone

**Equation: 261 + 20 = 187 + 71