MLR 80 2

IOWA PORE INDEX TEST

Interim Report

Highway Division
Office of Materials
January 1980

INTERIM REPORT

IOWA

PORE INDEX

TEST

BY

JAMES D. MYERS
CHIEF GEOLOGIST
515/296-1339

AND

WENDELL DUBBERKE
GEOLOGIST

IOWA DEPARTMENT OF TRANSPORTATION
HIGHWAY DIVISION
OFFICE OF MATERIALS
GEOLOGY SECTION
AMES, IOWA 50010

JANUARY 1980

Table of Contents

	Page
Introduction	1
Objective	1
Development of the Pore Index Test	1
Pore Index Testing	2
Conclusions	4
Recommendations	4
Appendix	
A-Pore Index Test Apparatus and Procedures	
B-Pore Index Test Results by Quarry	

IOWA PORE INDEX TEST

INTRODUCTION

The D-cracking of portland cement concrete pavements in Iowa was first recognized as a problem nearly 20 years ago. Early investigations revealed that the D-cracking was primarily associated with the use of limestone coarse aggregates that were susceptible to freeze-thaw failure, but that susceptibility could not be identified by any of the usual aggregate tests.

In 1962 research began into the freeze-thaw testing of aggregate in concrete. The procedure used was similar to that described by ASTM C-291.[1] After several years of investigation proved the reliability of this type of testing, the 1972 Iowa Standard Specifications required its use to determine the D-cracking susceptibility of limestone aggregates that lacked reliable service records.

While the freeze-thaw testing of aggregate in concrete has proven to be satisfactory in identifying limestone aggregates that can cause D-cracking, the procedure (modified ASTM C-666, Method B) does have undesirable features. The natural variability in the limestone sources associated with D-cracking is such that some samples will perform well when tested. Concrete beams containing aggregate with satisfactory service records can fail if minor amounts of deleterious materials are present in the aggregate. Also, a very long time--five to six months--is required to complete the test. A considerable part of that time, 90 days, is required for a moist-room cure. Iowa historically uses a moist room cure for concrete specimens and shorter cure times did not provide ranges of either growth or sonic modulus sufficient to differentiate between aggregates that do and do not cause D-cracking. In an effort to develop a shorter, more efficient test, Wendell Dubberke, a geologist with the Office of Materials, began investigations into measuring the amounts of water, under low air pressure, that could be injected into oven-dried aggregate.

OBJECTIVE

The objective of the investigations was the development of a test that would readily identify the potential of an aggregate to cause D-cracking because of its susceptivity to critical saturation.

DEVELOPMENT OF THE PORE INDEX TEST

A Press-Ur-Meter was modified by replacing the air chamber with a one-inch diameter plastic tube calibrated in milli-

[1]This test procedure is now designated as ASTM C-666, Method B.

liters. Oven-dried aggregate, cooled to room temperature, was placed in the container and covered with tap water to the zero mark in the plastic tube. Air pressure at 35 psi was introduced through the top of the plastic tube. A brief interval at the start of the test used to fill the larger void spaces in the stone, was termed the "primary load". The amount of water forced into the aggregate in the remainder of the test was termed "secondary load".

The primary-load measurements had no relationship to the susceptibility to D-cracking of aggregates with established service records. It was noted, however, that a few poor-quality aggregates with high primary-load measurements tend to perform well on the concrete durability test (ASTM C666, Method B), raising doubts of the validity of the test on highly porous aggregate.

High secondary-load measurements appeared to identify those aggregates associated with the D-cracking of portland cement concrete pavements. All subsequent investigation was therefore concerned only with the secondary-load measurements.

Equipment and procedural modifications continued to be made until those described in Appendix A were finally adopted.

PORE-INDEX TESTING

Routine aggregate testing was performed for the first time in 1978. All samples of coarse aggregate for use in portland cement concrete received by the Materials Laboratory were tested. Because D-cracking aggregates are restricted to a 3/4" maximum size, all pore-index samples were limited to the 1/2" x 3/4" particle sizes.

The quality specifications for coarse aggregate for portland cement concrete require that it have a freeze-thaw loss of six percent or less on Iowa Test Method No. 211. This is a water-alcohol test similar to AASHTO T 103, Procedure B. Because this test is quite severe on limestone aggregates with acid-insoluble material of clay and silt size, nearly all of the limestone samples tested had acid-insoluble contents of approximately six percent or less.

The results of the 1978 testing are given in Appendix B. The listing is in order by county number. Out-of-state sources are listed first. The last column headed "SERV" contains a number denoting the durability class of the source. A "1" indicates a Class 1 (D-cracking) durability source. A "2" or "3" indicates a Class 2 (satisfactory) durability source. Those listings with no number in this column are informational samples from unapproved sources.

Test Results on Aggregate with Service Record

Samples were received from 28 sources with 10 or more years of service record. Most had service records of twenty years or more. A secondary load of 27 milliliters is currently used to separate sources of aggregate associated with D-cracking from those that have satisfactory service records.

All 28 of these sources with established service records had secondary loads of 27 or less on all those not associated with D-cracking and above 27 on those that are associated with D-cracking. All of the D-cracking sources were sufficiently homogenous that no test results of 27 or less were obtained. Composite samples can be a problem and the individual stone types should be tested separately when necessary.

Test Results on Aggregate without Service Record

Tests run on aggregate from the remainder of the approved sources had 10 or fewer years of established service as coarse aggregate in portland cement concrete.

As can be seen in Appendix B some pore-index results were contrary to the approved durability classes.

These were, in order of appearance, by quarry name:

Lemley. This Class 1 (D-cracking) source had good pore-index test results. This is a new source. Other Exline sources cause D-cracking. However, concrete beams containing this aggregate also indicate that a better durability rating is justified.

Kruse. The listing is in error. This is a Class 2 durability source consistent with the pore-index test results.

Hibness. Two of nine pore-index results are contrary to the durability class rating.

Hodges-Dakota City. The durability class rating was originally established by testing of concrete beams. More recent results are consistent with the pore-index testing, indicating that this is a source of variable durability that may require more testing before additional use.

Klein. The two contradictory pore-index test results were due to the samples containing material from unapproved beds below the concrete ledge.

Ollie. The approved concrete ledge at this quarry, because of the pore-index test noted, was sampled bed by bed. A poor zone was identified and a new Class 2 durability ledge approved.

Early Chapel. Three test results on samples from this quarry are contradictory to the durability class rating. This is to be expected since the source is variable in nature. ASTM C666, Method B results are also variable.

Durham. The approved ledge at this quarry contains beds of widely disparate character. They need to be individually assessed before additional use.

Ferguson. This is a heavily-used, established source with a recently approved ledge of lower quality. The ledge with the established satisfactory service record contains some alkali-reactive material and frequently fails freeze-thaw, ASTM C666 Method B, and these pore-index tests. Additional beds have recently been added to those that had been originally approved. This source would never have been approved under any of the presently used criteria. However, it has a satisfactory service record of more than 20 years on the old ledge with the poor material.

Northwood. This source has five pore-index test results contrary to its durability rating. Several of these were taken to verify aggregate quantities containing material from unapproved beds.

CONCLUSIONS

The pore index test was sufficiently reliable to determine the D-cracking potential of limestone aggregates in all but a few cases where marginal results were obtained. Consistently poor or good results were always in agreement with established service records or concrete durability testing.

In those instances where marginal results are obtained the results of concrete durability testing should be considered when making the final determination of the D-cracking susceptibility of the aggregate in question.

RECOMMENDATIONS

The following applications for the pore index test have been recommended for consideration:

1. Concrete durability testing be discontinued in the evaluation process of new aggregate sources with pore index results between 0-20 (Class 2 durability) and over 35 (Class 1 durability).

2. Composite aggregates with intermediate pore index results of 20-35 be tested on each stone type to facilitate the possible removal of low durability stone from the production process.

3. Additional investigation should be made to evaluate the possibility of using the test to monitor and upgrade the acceptance of aggregate from sources associated with D-cracking.

APPENDIX A

PORE INDEX TEST APPARATUS AND PROCEDURES

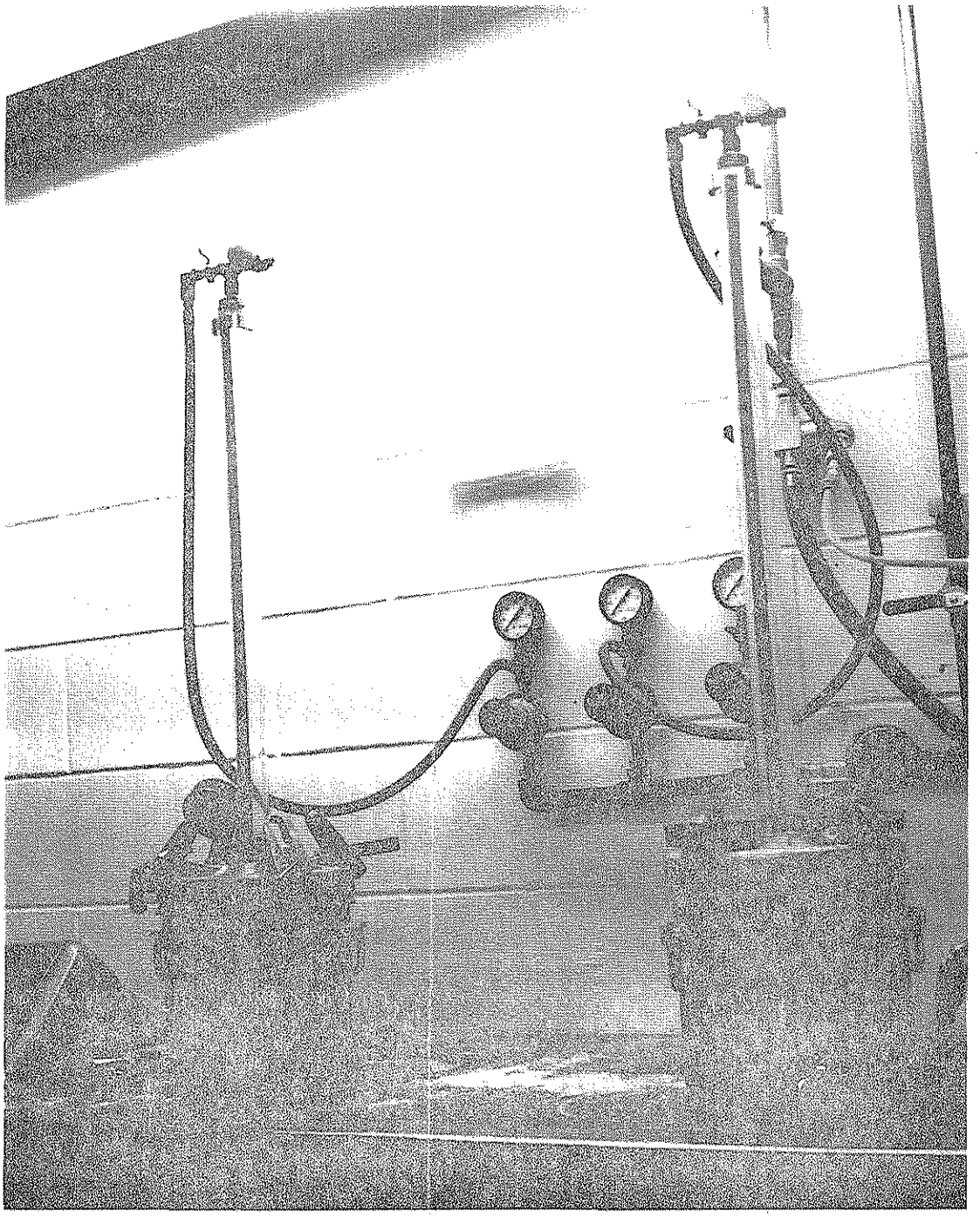

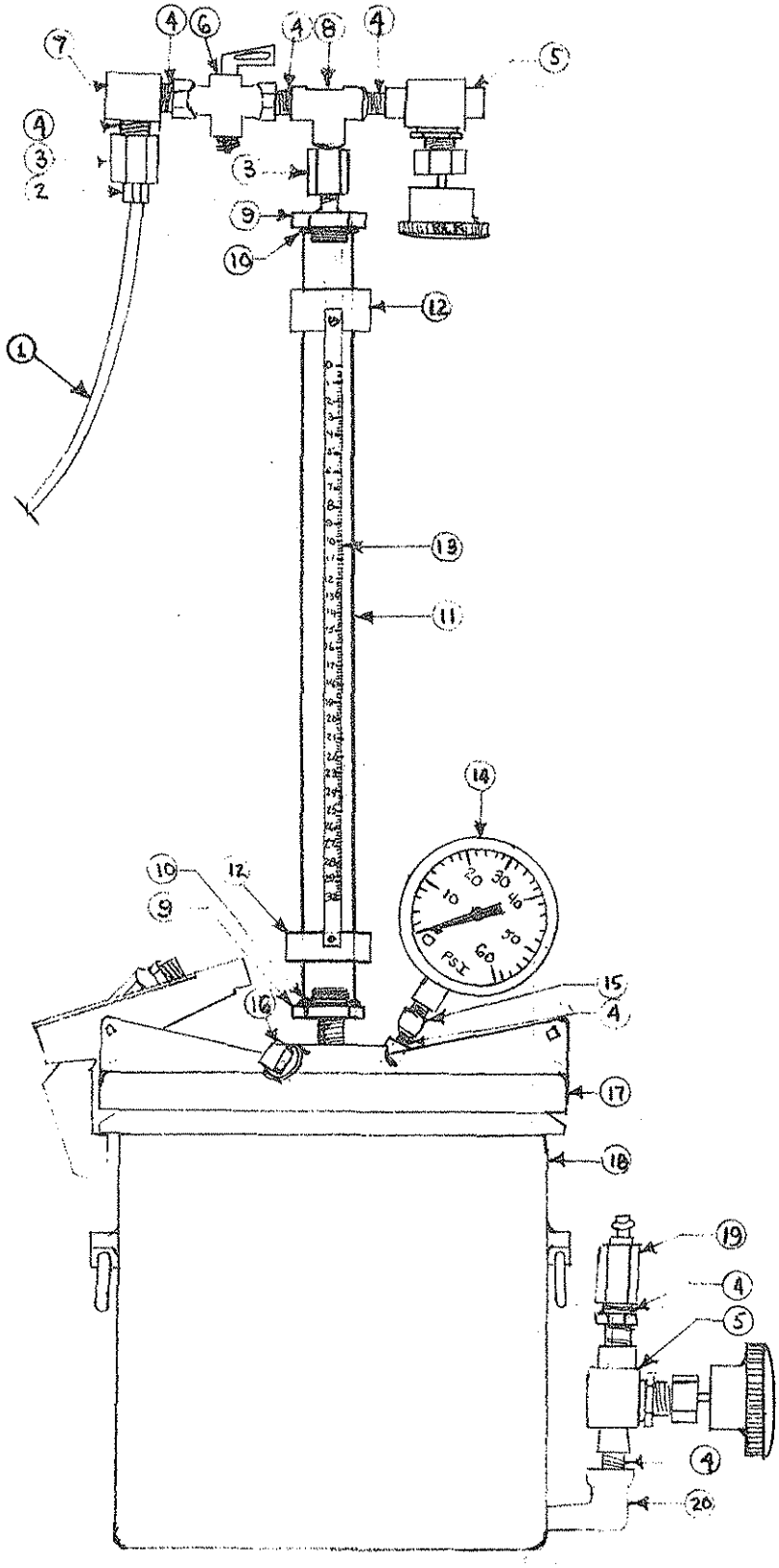

1. Rubber Air Hose
2. Brass Hose Connector
3. Brass Nut - 2
4. 3/4"-3/8" Pipe Nipples-7
5. 3/8" Pipe Size Needle Valve-2
6. 3/8" Shutoff Cock
7. 3/8"-90° Brass Block Pipe Elbow
8. 3/8" Tee
9. Hex Reducing Nipple 3/8" x 1" -2
10. O-Ring 1"-2
11. 26" - 1" Inside Dia. Plexiglass Pipe-¼" Walls
12. Broom Hanger Clips-2
13. Brass Scale - Graduated from 0-30 at 1 unit equal to 3/4" - sub-divided to 0.2 increments.
14. Pressure Gauge capable of up to 60 P.S.I.
15. 3/8" x 1/2" PipeReducer
16. 3/8" Pipe Plug
17. 1 Air Meter Lid conforming to AASHTO T152 with Air Pump and Shutoff Cocks removed
18. Air Meter Bowl with bored and tapped 3/8" hole at bottom.
19. 3/8" MPT Plug - for quick connect water hose coupling.
20. 3/8" - 90° Street Elbow

NOT DRAWN TO SCALE

(3 Hold-down clamps not shown)

Pore Index Test Apparatus and Procedures

Test Unit Apparatus

A modified Press-ur-meter is used to perform the pore index test. The pump, valve and gauge were removed from the lid and replaced by a 320 milliliter plexiglas tube, graduated in two milliliter increments. The addition of a standard 60 psi pressure gauge completes the lid modifications. A hole was drilled through the side of the pot at the bottom, fitted with a valve, and is used for loading and unloading the pot with cold tap water. Two valves are located at the top of the plexiglas tube. One valve is connected to a line supplying air at a constant 35 psi. The other valve is a vent valve and is opened while charging the unit with water.

Test Procedure

1. Place 9000* grams of oven dried, 1/2x3/4 inch aggregate in the pot.

2. Attach the lid, open the vent valve, and fill the pot and plexiglas tube with cold tap water to the "0" milliliter mark. The pressure gauge on the lid must remain at the zero P.S.I. mark during this filling stage.

3. Close the water supply and vent valves and then open the 35 PSI air supply valve as soon as possible. The air valve remains open throughout the duration of the test.

4. Take a water level reading at one minute. The amount of water injected during this first minute fills the aggregate's macro-pores and is referred to as the primary load.

   A large primary load is considered to be an indication of a beneficial limestone property. A well developed macro-pore system probably functions in a manner similar to air entrainment voids in concrete paste. The primary load is not used in the pore index test result calculations.

5. Take a water level reading at fifteen minutes. The volume of water injected between one minute and fifteen minutes is the secondary load and represents the amount of water injected into the aggregate's micro-pore system. A secondary load of 27 milliliters or more indicates a negative limestone property that correlates with a saturated aggregate's inability to withstand internal pressures caused by freezing. The secondary load in milliliters is reported out as the final pore index test result.

*During the evaluation phase of the Pore-Index test, samples ranging from 3000 to 10,000 grams were accepted for testing. Since the secondary load (Pore Index test result) is directly proportional to the size of the sample, we computer adjusted the test results to reflect a projected 9000 gram sample. Many of the adjusted test results were from short samples received from the districts but in a few cases we were forced to use a half sample because some high absorption, full samples, exceeded the capacity of the 320 milliliter tube during the primary load phase of the test.

APPENDIX B

PORE INDEX TEST RESULTS BY QUARRY

GRAPH OF PORE INDEX 14.0 MINUTE LOAD FROM 01 MIN TO 15 MIN
IN SEQUENCE BY PORE INDEX WITHIN QUARRY WITHIN COUNTY
WENDELL DUBBERKE 1-515-296-1339 IOWA DOT AMES, IOWA

16:57 MONDAY, JANUARY 14, 1980

LABNO	QUARRY	CO	UNIT	00 10 20 30 40 50 60 70 80	SIZE/BED/SERV	
C9796	WYONDOT OH	0	SILURIAN	**********	1/2	3
C9828	TYRONE(KY)	0		**********	1/2	?
C9827	LITERS(KY)	0		**********	1/2	?
C9797	WATERVILLE	0	SILURIAN	**********	1/2	?
C8068	MINN CR PC	0	CRUSHED PC	**********	1/2	?
C8888	BIGGSVILLE	0	BURLINGTON	**********	1/2	6
C8602	BIGGSVILLE	0	BURLINGTON	**********	1/2	3
C8603	BIGGSVILLE	0	BURLINGTON	**********	1/2	3
C8097	WEEPING W	0	PLATTSMTH	**********	1/2	3
C8945	BIGGSVILLE	0	BURLINGTON	**********	1/2	
C8604	BIGGSVILLE	0	BURLINGTON	**********	1/2	3
C8106	WEEPING W	0	PLATTSMTH	**********	1/2	3
C8097	WEEPING W	0	PLATTSMTH	**********	1/2	3
C8099	WEEPING W	0	PLATTSMTH	**********	1/2	3
C9002	DALLAS CTY	0	BURLINGTON	**********	1/2	3
C8270	WEEPING W	0	PLATTSMTH	**********	1/2	3
C8688	WEEPING W	0	PLATTSMTH	**********	1/2	3
C8265	WEEPING W	0	PLATTSMTH	**********	1/2	3
C8523	PR DUCHIEN	0	GRAVEL TOT	**********	1/2	3
C8692	WEEPING W	0	PLATTSMTH	**********	1/2	3
C8826	WEEPING W	0	PLATTSMTH	**********	1/2	10
C8697	WEEPING W	0	PLATTSMTH	**********	1/2	3
C8796	WEEPING W	0	PLATTSMTH	**********	1/2	3
C8644	WEEPING W	0	PLATTSMTH	**********	1/2	3
C8841	WEEPING W	0	PLATTSMTH	**********	1/2	3
C8690	WEEPING W	0	PLATTSMTH	**********	1/2	3
C8399	WEEPING W	0	PLATTSMTH	**********	1/2	3
C8643	WEEPING W	0	PLATTSMTH	**********	1/2	3
C8931	JEFFERIES	0	BETH FALLS	**********	1/2	2-8
C8877	DALLAS CTY	0	BURLINGTON	**********	1/2	5-6
C8876	DALLAS CTY	0	BURLINGTON	**********	1/2	5-6
C8686	MENLO	1	ARGENTINE	**********	1/2	1
C8275	MENLO	1	ARGENTINE	**********	1/2	1
C8227	MENLO	1	ARGENTINE	**********	1/2	1
C8175	MENLO	1	ARGENTINE	**********	1/2	1
C8246	MENLO	1	ARGENTINE	**********	1/2	1
C8980	MENLO	1	ARGENTINE	**********	1/2	15AC
C8320	MENLO	1	ARGENTINE	**********	1/2	1
C8824	MENLO	1	ARGENTINE	**********	1/2	1
C8248	MENLO	1	ARGENTINE	**********	1/2	1
C8438	MENLO	1	ARGENTINE	**********	1/2	1
C8437	MENLO	1	ARGENTINE	**********	1/2	1
C8646	MENLO	1	ARGENTINE	**********	1/2	1
C8415	MENLO	1	ARGENTINE	**********	1/2	1
C8419	MENLO	1	ARGENTINE	**********	1/2	
C8769	MENLO	1	ARGENTINE	**********	1/2	1
C8524	MENLO	1	ARGENTINE	**********	1/2	1

GRAPH OF PORE INDEX 14.0 MINUTE LOAD FROM 01 MIN TO 15 MIN 2
IN SEQUENCE BY PORE INDEX WITHIN QUARRY WITHIN COUNTY 16:57 MONDAY, JANUARY 14, 1980
WENDELL DUBBERKE 1-515-296-1339 IOWA DOT AMES, IOWA

LA3NO	QUARRY	CO	UNIT	00 10 20 30 40 50 60 70 80	SIZE/BED/SERV
C8887	MENLO	1	ARGENTINE	**********	1/2 15AC
C8268	MENLO	1	ARGENTINE	**********	1/2 1
C6752	MENLO	1	ARGENTINE	**********	1/2 1
C5398	MENLO	1	ARGENTINE	**********	1/2 1
C8823	MENLO	1	ARGENTINE	**********	1/2 1
C8871	MENLO	1	ARGENTINE	**********	1/2 15AC
C8416	MENLO	1	ARGENTINE	**********	1/2 1
C8436	MENLO	1	ARGENTINE	**********	1/2 1
C8520	MENLO	1	ARGENTINE	**********	1/2 1
C8351	MENLO	1	ARGENTINE	**********	1/2 1
C8398	MENLO	1	ARGENTINE	**********	1/2 1
C8889	MENLO	1	ARGENTINE	**********	1/2 16AC
C8226	LEMLEY W	4	EXLINE	**********	1/2 1
C8222	LEMLEY W	4	EXLINE	**********	1/2 1
C9275	LEMLEY W	4	EXLINE	**********	1/2 2 & 3 1
C8224	LEMLEY W	4	EXLINE	**********	1/2 1
C6634	LEMLEY W	4	EXLINE	**********	1/2 1
C6680	LEMLEY W#3	4	EXLINE	**********	1/2 1
C8225	LEMLEY W	4	EXLINE	**********	1/2 1
C8711	LEMLEY W#3	4	EXLINE	**********	1/2 1
C8223	LEMLEY W	4	EXLINE	**********	1/2 1
C9276	LEMLEY W	4	EXLINE	**********	1/2 1,2&3 1
C9519	LEMLEY W	4	EXLINE	**********	1/2 1-3 1
C8501	LEMLEY E	4	EXLINE	**********	1/2 1
C8138	SMITH	6	CORALVILLE	**********	1/2 3
C7000	SMITH-W	6	CORALVILLE	**********	1/2 3
C7000	SMITH-N	6	CORALVILLE	**********	1/2 3
C7000	SMITH-E	6	CORALVILLE	**********	1/2 3
C7000	SMITH-S	6	CORALVILLE	**********	1/2 3
C8049	GARRISON S	6	CORALVILLE	**********	1/2 3
C8043	GARRISON E	6	CORALVILLE	**********	1/2 3
C8045	GARRISON W	6	CORALVILLE	**********	1/2 3
C8047	GARRISON N	6	CORALVILLE	**********	1/2 3
C6156	GARRISON	6	CORALVILLE	**********	1/2 3
C6242	PINTS	7	CORALVILLE	**********	1/2 1
C8395	PINTS E	7	SOLON	**********	1/2 1
C8397	PINTS S	7	SOLON	**********	1/2 1
C8396	PINTS S	7	SOLON	**********	1/2 1
C8394	PINTS W	7	SOLON	**********	1/2 1
C8243	PINTS	7	SOLON	**********	1/2 1
C8803	PINTS	7	SOLON	**********	1/2 1
C8139	WLOO SOUTH	7	CORALVILLE	**********	1/2 1
C8244	WLOO SOUTH	7	CORALVILLE	**********	1/2 1
C8088	WLOO SOUTH	7	CORALVILLE	**********	1/2 1
C8701	WLOO SOUTH	7	CORALVILLE	**********	1/2 1
C8932	WLOO SOUTH	7	CORALVILLE	**********	1/2 18-23

GRAPH OF PORE INDEX 14.0 MINUTE LOAD FROM 01 MIN TO 15 MIN
IN SEQUENCE BY PORE INDEX WITHIN QUARRY WITHIN COUNTY
WENDELL DUBBERKE 1-515-296-1339 IOWA DOT AMES, IOWA

3
16:57 MONDAY, JANUARY 14, 1980

```
LABNO QUARRY      CO UNIT       00        10        20        30        40        50        60        70        80        SIZE/BED/SERV
C7000 WL00-S-S     7 CORALVILLE ********************************************                                              1/2 18-23 1
C6012 WL00 SOUTH   7 CORALVILLE ********************************************                                              1/2       1
C7000 WL00-S-E     7 CORALVILLE ********************************************                                              1/2 18-23 1
C7000 WL00-S-E     7 CORALVILLE ********************************************                                              1/2 18-23 1
C7000 WL00-S-N     7 CORALVILLE ********************************************                                              1/2 18-23 1
C9735 WL00 S (B)   7 CORALVILLE ************************************************                                            1/2 18-23 1
C9735 WL00 S (A)   7 CORALVILLE ************************************************                                            1/2 18-23 1
C6012 WL00 SOUTH   7 CORALVILLE ************************************************************************                    1/2       1
C6012 WL00 SOUTH   7 CORALVILLE ************************************************************************                    1/2       1
                                                                                                                                      .
C8725 FOX          7 SOLON      ********************                                                                          1/2       3
C8654 FOX          7 SOLON      **********************                                                                        1/2       3
C8819 FOX          7 SOLON      ************************                                                                      1/2 1NE   3
                                                                                                                                      .
C8421 LAMONT  E   10 HOPKINTON  ***************                                                                               1/2       3
C8423 LAMONT  N   10 HOPKINTON  ****************                                                                              1/2       3
C8422 LAMONT  W   10 HOPKINTON  ****************                                                                              1/2       3
C8037 WESTON      10 HOPKINTON  ****************                                                                              1/2       3
C8424 LAMONT  S   10 HOPKINTON  ******************                                                                            1/2       3
                                                                                                                                      .
C6907 HAZELTON    10 HOPKINTON  ***                                                                                           1/2       3
C8452 HAZELTON    10 HOPKINTON  ****                                                                                          1/2       3
C8866 HAZELTON    10 HOPKINTON  *****                                                                                         1/2       3
C8509 PATTISON    10 HOPKINTON  *********                                                                                     1/2       3
C8507 PATTISON    10 HOPKINTON  **********                                                                                    1/2       3
C8508 PATTISON    10 HOPKINTON  ***********                                                                                   1/2       3
C8510 PATTISON    10 HOPKINTON  ***************                                                                               1/2       3
                                                                                                                                      .
C8286 AURORA      10 HOPKINTON  *****                                                                                         1/2       3
C8126 AURORA      10 HOPKINTON  *****                                                                                         1/2       3
C8102 AURORA      10 HOPKINTON  ******                                                                                        1/2       3
C8067 AURORA      10 HOPKINTON  *******                                                                                       1/2       3
C8034 AURORA      10 HOPKINTON  ********                                                                                      1/2       3
C8199 AURORA      10 HOPKINTON  *********                                                                                     1/2       3
C8102 AURORA      10 HOPKINTON  *********                                                                                     1/2       3
C8676 AURORA      10 HOPKINTON  **********                                                                                    1/2       3
C8113 AURORA      10 HOPKINTON  **********                                                                                    1/2       3
C5592 AURORA      10 HOPKINTON  ***********                                                                                   1/2       3
C8732 AURORA      10 HOPKINTON  ************                                                                                  1/2       3
C8410 AURORA      10 HOPKINTON  *************                                                                                 1/2       3
C8476 AURORA      10 HOPKINTON  *************                                                                                 1/2       3
C8731 AURORA      10 HOPKINTON  ***************                                                                               1/2       3
C8059 AURORA      10 HOPKINTON  ***************                                                                               1/2       3
C8013 AURORA      10 HOPKINTON  ******************                                                                            1/2       3
C8013 AURORA      10 HOPKINTON  ********************                                                                          1/2       3
                                                                                                                                      .
C9846 FLORRY      12 CORALVILLE ******************************                                                                1/2 1-11  1
                                                                                                                                      .
C8118 NEYMEYER    12 IOWA FALLS ***************                                                                               1/2       ?
                                                                                                                                      .
C8628 SCHNECKLTH  16 GOWER      ************                                                                                  1/2       3
C8100 SCHNECKLTH  16 GOWER      *****************                                                                             1/2       3
```

GRAPH OF PORE INDEX 14.0 MINUTE LOAD FROM 01 MIN TO 15 MIN
IN SEQUENCE BY PORE INDEX WITHIN QUARRY WITHIN COUNTY 16:57 MONDAY, JANUARY 14, 1980
WENDELL DUBBERKE 1-515-296-1339 IOWA DOT AMES, IOWA

LABNO	QUARRY	CO	UNIT	00 10 20 30 40 50 60 70 80	SIZE/BED/SERV		
C6570	MCGUIRE	16	GOWER	********	1/2		3
C6675	MCGUIRE	16	GOWER	********	1/2		3
C8457	QUIMBY	17	CORALVILLE	**********	1/2		3
C8895	QUIMBY	17	CORALVILLE	**********	1/2		
C6775	QUIMBY	17	CORALVILLE	**********	1/2		
C9699	QUIMBY	17	CORALVILLE	**********	1/2	5-10	3
C9700	QUIMBY	17	CORALVILLE	**********	1/2	5-10	3
C6533	QUIMBY	17	CORALVILLE	**********	1/2		3
C9843	KOHLER #1	17	CORALVILLE	**********	1/2	1-8	3
C9843	KOHLER #2	17	CORALVILLE	**********	1/2	1-8	3
C8599	LILLYBRIDG	17	OWEN	**********	1/2		3
C6078	NASHUA	19	CORALVILLE	**********	1/2		2
C8230	NASHUA	19	CORALVILLE	**********	1/2		2
C8117	NASHUA	19	CORALVILLE	**********	1/2		2
C6137	NASHUA	19	CORALVILLE	**********	1/2		2
C9745	NASHUA	19	CORALVILLE	**********	1/2	9-10	3
C9746	NASHUA	19	CORALVILLE	**********	1/2	9-10	3
C9744	NASHUA COM	19	CORALVILLE	**********	1/2	9-10	3
C8442	NASHUA S	19	CORALVILLE	**********	1/2		3
C8441	NASHUA N	19	CORALVILLE	**********	1/2		3
C8439	NASHUA E	19	CORALVILLE	**********	1/2		3
C8440	NASHUA W	19	CORALVILLE	**********	1/2		3
C8315	TWIN ROCKS	22	STEWARTVLE	**********	1/2		2
C7000	BENTE-S	22	STEWARTVLE	*********	1/2	4-9	2
C7000	BENTE	22	STEWARTVLE	*********	1/2	4-9	2
C7000	BENTE	22	STEWARTVLE	**********	1/2	4-9	2
C7000	BENTE-N	22	STEWARTVLE	**********	1/2	4-9	2
C8573	KRUSE	22	STEWARTVLE	**********	1/2	5-11	
C6573	KRUSE	22	STEWARTVLE	**********	1/2	5-12	3
C8705	KRUSE	22	STEWARTVLE	**********	1/2		1
C8754	KRUSE	22	STEWARTVLE	**********	1/2		3
C8706	KRUSE	22	STEWARTVLE	**********	1/2		1
C8706	KRUSE	22	STEWARTVLE	**********	1/2		1
C6529	KRUSE	22	STEWARTVLE	**********	1/2		3
C9011	KRUSE	22	STEWARTVLE	**********	1/2		2
C8786	KRUSE	22	STEWARTVLE	**********	1/2		
C9272	KRUSE	22	STEWARTVLE	**********	1/2	5-12	3
C6572	KRUSE	22	STEWARTVLE	**********	1/2		3
C8177	MORAREND	22	STEWARTVLE	**********	1/2		3
C7662	JOY SPRING	22	HOPKINTON	**********	1/2	1-3	3
C7000	BENTE PIT	22	GRAVEL TOT	**********	1/2		1

GRAPH OF PORE INDEX 14.0 MINUTE LOAD FROM 01 MIN TO 15 MIN
IN SEQUENCE BY PORE INDEX WITHIN QUARRY WITHIN COUNTY 16:57 MONDAY, JANUARY 14, 1980
WENDELL DUBBERKE 1-515-296-1339 IOWA DOT AMES, IOWA

LABNO	QUARRY	CO	UNIT	00 10 20 30 40 50 60 70 80	SIZE/BED/SERV
C8144	SHAFFTON	23	GOWER	**********	1/2 3
C8797	SHAFTON	23	GOWER	**********	1/2 3
C9006	GOOSE LAKE	23	HOPKINTON	**********	1/2 3
C8675	BARBER	23	GOWER	**********	1/2
C9490	SEDWICK#3	28	HOPKINTON	**********	1/2 3 3
C9489	SEDWICK#3	28	HOPKINTON	**********	1/2 3 3
C9488	SEDWICK#3	28	HOPKINTON	**********	1/2 3 3
C8614	LOGAN	28	HOPKINTON	**********	1/2 3
C8451	LOGAN	28	HOPKINTON	**********	1/2 3
C8546	LOGAN	28	HOPKINTON	**********	1/2 3
C8739	LOGAN	28	HOPKINTON	**********	1/2 3
C8090	LEONHARD	29	BURLINGTON	**********	1/2 15 3
C8530	LEONHARD	29	BURLINGTON	**********	1/2 3
C9003	MEDIAPOLIS	29	BURLINGTON	**********	1/2 3
C8916	MEDIAPOLIS	29	BURLINGTON	**********	1/2 15
C8329	LEONHARD	29	BURLINGTON	**********	1/2 3
C8332	LEONHARD	29	BURLINGTON	**********	1/2 3
C8261	SUL SLOUGH	29	WASSONVLE	***	1/2 18 3
C8362	SUL SLOUGH	29	WASSONVLE	*******	1/2 18 3
C8848	DUBUQUE	31	STEWARTVLE	**********	1/2
C9698	BROWN	31	STEWARTVLE	**********	1/2 8-9 3
C8922	KURT QR	31	HOPKINTON	**********	1/2 1-2
C8169	ELDORADO	33	HOPKINTON	***	1/2 3
C8235	ELDORADO	33	EDGEWOOD	****	1/2 3
C9270	ELDORADO	33	HOPKINTON	*******	1/2 4-68 3
C8278	CARVILLE	34	CORALVILLE	**********	1/2 3
C8240	CARVILLE?	34	CORALVILLE	**********	1/2
C8727	CARVILLE	34	CORALVILLE	**********	1/2 3
C8724	CARVILLE	34	CORALVILLE	**********	1/2 3
C8863	CARVILLE	34	CORALVILLE	**********	1/2 1-5
C8813	CARVILLE	34	CORALVILLE	**********	1/2 2
C8864	CARVILLE	34	CORALVILLE	**********	1/2
C8530	CARVILLE	34	CORALVILLE	**********	1/2 1-5 3
C8150	HIBNESS	35	GIL CITY	**********	1/2 3
C8152	HIBNESS	35	GIL CITY	**********	1/2 3
C8151	HIBNESS	35	GIL CITY	**********	1/2 3
C8229	HIBNESS	35	GIL CITY	**********	1/2 3
C8150	HIBNESS	35	GIL CITY	**********	1/2 3
C8228	HIBNESS	35	GIL CITY	**********	1/2 3

GRAPH OF PORE INDEX 14.0 MINUTE LOAD FROM 11 MIN TO 15 MIN
IN SEQUENCE BY PORE INDEX WITHIN QUARRY WITHIN COUNTY 16:57 MONDAY, JANUARY 14, 1980
WENDELL DUBBERKE 1-515-296-1339 IOWA DOT AMES, IOWA

LABNO	QUARRY	CO	UNIT	00 10 20 30 40 50 60 70 80	SIZE/BED/SERV
C8232	HIBNESS	35	GIL CITY	**********	1/2 3
C8233	HIBNESS	35	GIL CITY	**********	1/2 3
C8267	HIBNESS	35	GIL CITY	**********	1/2 3
C8684	MOBERLY	40	GIL CITY	***	1/2 3
C8659	MOBERLY	40	GIL CITY	*****	1/2 3
C8374	MOBERLY	40	GIL CITY	*********	1/2 12C13
C8773	MOBERLY	40	GIL CITY	*********	1/2 12-13 3
C8378	MOBERLY	40	GIL CITY	**********	1/2 3
C8842	MOBERLY	40	GIL CITY	**********	1/2 3
C8381	MOBERLY	40	GIL CITY	**********	1/2 3
C8380	MOBERLY	40	GIL CITY	**********	1/2 3
C8379	MOBERLY	40	GIL CITY	**********	1/2 3
C8035	MOBERLY	40	GIL CITY	**********	1/2 11C12 3
C8814	MOBERLY QR	40	GIL CITY	**********	1/2 11-13
C8136	GARNER MM	41	OWEN	*******	1/2 3
C8166	GARNER MM	41	OWEN	*******	1/2 3
C8650	GARNER MM	41	OWEN	**********	1/2 1-4E 3
C8652	GARNER MM	41	OWEN	**********	1/2 6-7E 3
C8649	GARNER MM	41	OWEN	**********	1/2 1-4N 3
C8671	GARNER MM	41	OWEN	**********	1/2 3
C8321	GARNER	41	OWEN	**********	1/2 3
C8651	GARNER MM	41	OWEN	**********	1/2 6-7N 3
C6774	GARNER MM	41	OWEN	**********	1/2 3
C8297	GARNER WVR	41	OWEN	******	1/2 3
C8296	GARNER WVR	41	OWEN	**********	1/2 3
C8352	GARNER	41	OWEN	**********	1/2 3
C8327	GARNER WVR	41	OWEN	**********	1/2 3
C8325	GARNER	41	OWEN	**********	1/2 3
C8322	GARNER WVR	41	OWEN	**********	1/2 3
C8053	ALDEN S	42	GIL CITY	***	1/2 3
C8051	ALDEN N	42	GIL CITY	*****	1/2 3
C8331	ALDEN	42	GIL CITY	******	1/2 1-3
C8055	ALDEN	42	GIL CITY	******	1/2 3
C8057	ALDEN	42	GIL CITY	*******	1/2 3
C9734	ALDEN (A)	42	GIL CITY	*********	1/2 3 3
C8058	ALDEN	42	GIL CITY	**********	1/2 3
C9734	ALDEN (B)	42	GIL CITY	**********	1/2 3 3
C8864	ALDEN	42	GIL CITY	**********	1/2 3
C8753	ALDEN	42	GIL CITY	**********	1/2 3
C8633	ALDEN	42	GIL CITY	**********	1/2 3
C8288	ALDEN	42	GIL CITY	**********	1/2 3
C8575	ALDEN	42	GIL CITY	**********	1/2 3
C8245	ALDEN	42	GIL CITY	**********	1/2 3
C8096	ALDEN	42	GIL CITY	**********	1/2 3
C8623	ALDEN	42	GIL CITY	**********	1/2 3
C8943	ALDEN	42	GIL CITY	**********	1/2 1-3
C8657	ALDEN	42	GIL CITY	**********	1/2 3
C8271	ALDEN	42	GIL CITY	**********	1/2 3

GRAPH OF PORE INDEX 14.0 MINUTE LOAD FROM 01 MIN TO 15 MIN
IN SEQUENCE BY PORE INDEX WITHIN QUARRY WITHIN COUNTY 16:57 MONDAY, JANUARY 14, 1980
WENDELL DUBBERKE 1-515-296-1339 IOWA DOT AMES, IOWA

LABNO	QUARRY	CO	UNIT	00 10 20 30 40 50 60 70 80	SIZE/BED/SERV
C8700	LOGAN CLRK	43	BETH FALLS	**********	1/2 1
C8120	LOGAN CLK	43	BETH FALLS	**********	1/2 1
C8350	LOGAN	43	BETH FALLS	**********	1/2 1
C8699	LOGAN	43	BETH FALLS	**********	1/2 1
C8517	LOGAN	43	BETH FALLS	**********	1/2 1
C8567	LOGAN	43	BETH FALLS	**********	1/2 1
C8833	LOGAN	43	BETH FALLS	**********	1/2 1
C8389	SARATOGA N	45	HOPKINTON	**********	1/2 8&9 3
C8388	SARATOGA S	45	HOPKINTON	**********	1/2 8&9 3
C8485	SARATOGA E	45	SOLON	**********	1/2 1-3 3
C8386	SARATOGA E	45	HOPKINTON	**********	1/2 8&9 3
C8387	SARATOGA W	45	HOPKINTON	**********	1/2 8&9 3
C8487	SARATOGA	45	SOLON	**********	1/2 1-3 3
C8488	SARATOGA S	45	SOLON	**********	1/2 1-3 3
C8486	SARATOGA	45	SOLON	**********	1/2 1-3 3
C8317	DOTZLER	45	HOPKINTON	**********	1/2 3
C8236	DALEY	45	HOPKINTON	**********	1/2 3
C8206	DALEY	45	HOPKINTON	**********	1/2 3
C8234	DALEY	45	HOPKINTON	**********	1/2 3
C8316	DALEY	45	HOPKINTON	**********	1/2 3
C8238	DALEY	45	HOPKINTON	**********	1/2 3
C8190	SOUHRADA	45	SOLON	**********	1/2 3
C8185	SOUHRADA	45	SOLON	**********	1/2 3
C8141	SOUHRADA	45	SOLON	**********	1/2 3
C8239	SOUHRADA	45	SOLON	**********	1/2 3
C8475	KAMPEN	46	GIL CITY	**********	1/2 3
C8171	KAMPEN	46	GIL CITY	**********	1/2 3
C8375	KAMPEN	46	GIL CITY	**********	1/2 3
C8412	HODGES	46	GIL CITY	**********	1/2 2
C8396	DAKOTA CTY	46	GIL CITY	**********	1/2
C8698	HODGES	46	GIL CITY	**********	1/2 10-18
C8538	HODGES E	46	GIL CITY	**********	1/2 10-18 3
C8149	ANDREW	49	HOPKINTON	**********	1/2 3
C8299	ANDREW	49	HOPKINTON	**********	1/2 3
C8261	PRESTON	49	HOPKINTON	**********	1/2 7-10 3
C8616	PRESTON	49	HOPKINTON	**********	1/2
C8821	PRESTON	49	HOPKINTON	**********	1/2 3
C8632	CONKLIN	52	CORALVILLE	**********	1/2 3
C9008	CONKLIN	52	CORALVILLE	**********	1/2 3
C8594	CONKLIN	52	CORALVILLE	**********	1/2 3
C8677	CONKLIN	52	CORALVILLE	**********	1/2 3

GRAPH OF PORE INDEX 14.J MINUTE LOAD FROM 01 MIN TO 15 MIN 8
IN SEQUENCE BY PORE INDEX WITHIN QUARRY WITHIN COUNTY 16:57 MONDAY, JANUARY 14, 1980
WENDELL DUBBERKE 1-515-296-1339 IOWA DOT AMES, IOWA

```
LABNO QUARRY     CO UNIT      00        10        20        30        40        50        60        70        80        SIZE/BED/SERV

C8134 KLEIN      52 CORALVILLE *************                                                                          1/2        3
C8094 KLEIN      52 CORALVILLE *************                                                                          1/2        3
C8101 KLEIN      52 CORALVILLE ******************                                                                      1/2        3
C8336 KLEIN      52 CORALVILLE *******************                                                                     1/2        3
C8028 KLEIN      52 CORALVILLE ***********************************                                                     1/2        3
C8027 KLEIN      52 CORALVILLE ***********************************************************************************1/2        3

C8125 FARMERS    53 GOWER      *************                                                                          1/2        3
C8742 FARMERS    53 GOWER      ****************                                                                         1/2        3

C8583 BALLOU     53 GOWER      ************                                                                           1/2        3
C8723 BALLOU     53 GOWER      ****************                                                                         1/2        3
C8748 BALLOU     53 GOWER      ******************                                                                       1/2        3

C8767 STONE CITY 53 GOWER      ****                                                                                   1/2        3
C8337 STONE CITY 53 GOWER      *****                                                                                  1/2        3
C9009 STONE CTY  53 GOWER      ********                                                                               1/2        3

C8029 OLLIE      54 EAGLE CITY *******************                                                                      1/2        2
C9053 OLLIE      54 EAGLE CITY ************************                                                                 1/2 27-29  3
C8163 OLLIE      54 EAGLE CITY *************************                                                                1/2        ?
C8463 OLLIE      54 EAGLE CITY ********************************************                                                1/2        ?
C8463 OLLIE      54 EAGLE CITY ********************************************                                                1/2
C9132 OLLIE CHRT 54 EAGLE CITY ***********************************************************************************      1/2 CHERT  1

C8262 BOWSER     57 GOWER      ***                                                                                    1/2        3
C8287 BOWSER     57 GOWER      ******                                                                                 1/2        3
C8850 BOWSER     57 GOWER      *******                                                                                1/2 6-7
C8827 BOWSER     57 GOWER      ****************                                                                         1/2 6-7

C8756 CDR RPD S  57 GOWER      *****                                                                                  1/2        3
C8571 CDR RPD S  57 GOWER      ********                                                                               1/2        3
C8200 CDR RAP S  57 GOWER      *********                                                                              1/2        3
C8201 CDR RPD S  57 GOWER      ***********                                                                            1/2        3
C8205 CDR RAP S  57 GOWER      ***********                                                                            1/2        3
C8612 CDR RPD S  57 GOWER      ************                                                                           1/2        3
C8757 CDR RPD S  57 GOWER      ************                                                                           1/2        3
C8739 CDR RPD S  57 GOWER      *************                                                                          1/2        3
C8539 CDR RPD S  57 GOWER      *************                                                                          1/2        3
C8065 CDR RAP S  57 GOWER      **************                                                                         1/2        3
C8860 CDR RPD S  57 GOWER      **************                                                                         1/2

C8867 LISBON     57 GOWER      *******                                                                                1/2        3

C8064 COL JCT    58 WASSONVLE  ****************                                                                       1/2        3
C8092 COL JCT    58 WASSONVLE  ****************                                                                       1/2        3
C8092 COL JCT    58 WASSONVLE  *****************                                                                       1/2        3
C8620 COL JCT    58 WASSONVLE  *****************                                                                       1/2        3
C8713 COL JCT    58 WASSONVLE  *******************                                                                     1/2        3
C8810 COLUBUS JT 58 WASSONVLE  ***********************                                                                 1/2

C8935 EARLY CHAP 61 ARGENTINE  *****************                                                                       1/2        1
```

GRAPH OF PORE INDEX 14.0 MINUTE LOAD FROM 01 MIN TO 15 MIN
IN SEQUENCE BY PORE INDEX WITHIN QUARRY WITHIN COUNTY
WENDELL DUBBERKE 1-515-296-1339 IOWA DOT AMES, IOWA

16:57 MONDAY, JANUARY 14, 1980

```
LABNO QUARRY     CO UNIT      00        10        20        30        40        50        60        70        80        SIZE/BED/SERV

C8176 EARLY CHAP 61 ARGENTINE  ******************      .                                                                  1/2        1
C8198 EARLY CHAP 61 ARGENTINE  *********************** .                                                                  1/2        1
C8338 EARLY CHAP 61 ARGENTINE  ****************************                                                                 1/2        1
C8277 EARLY CHAP 61 ARGENTINE  *****************************                                                                 1/2        1
C8936 EARLY CHAP 61 ARGENTINE  *****************************                                                                 1/2        1
C8636 EARLY CHAP 61 ARGENTINE  ******************************                                                                 1/2        1
C8319 EARLY CHAP 61 ARGENTINE  ******************************                                                                 1/2        1
C8673 EARLY CHAP 61 ARGENTINE  ********************************                                                                 1/2        1
C8264 EARLY CHAP 61 ARGENTINE  ********************************                                                                 1/2        1
C8933 EARLY CHAP 61 ARGENTINE  ********************************                                                                 1/2 15-AC
C8933 EARLY CHAP 61 ARGENTINE  ********************************                                                                 1/2 15A-C
                                                        .
C8672 EARLHAM    61 ARGENTINE  ************************************************************                                  1/2        1
                                                        .
C8942 EYERLY     61 ARGENTINE  ********************************                                                                 1/2        1
C8938 EYERLY     61 ARGENTINE  ********************************                                                                 1/2        1
C8939 EYERLY     61 ARGENTINE  *********************************                                                                 1/2 15-AC
C8941 EYERLY     61 ARGENTINE  ************************************                                                                 1/2 15-AC
                                                        .
C8081 DURHAM     63 EAGLE CITY ****************          .                                                                  1/2        3
C8164 DURHAM     63 EAGLE CITY ****************          .                                                                  1/2        3
C8209 DURHAM     63 EAGLE CITY *****************         .                                                                  1/2        3
C8159 DURHAM     63 EAGLE CITY *****************         .                                                                  1/2        3
C8762 DURHAM     63 EAGLE CITY ******************        .                                                                  1/2        3
C8763 DURHAM     63 EAGLE CITY ********************      .                                                                  1/2        3
C8335 DURHAM     63 EAGLE CITY ***********************   .                                                                  1/2        3
C8158 DURHAM     63 EAGLE CITY ************************  .                                                                  1/2        3
C8165 DURHAM     63 EAGLE CITY *************************.                                                                  1/2        3
C8498 DURHAM     63 EAGLE CITY **************************                                                                  1/2        3
C8293 DURHAM     63 EAGLE CITY **************************                                                                  1/2        3
C8333 DURHAM     63 EAGLE CITY ***************************                                                                  1/2        3
C8290 DURHAM     63 EAGLE CITY ***************************                                                                  1/2        3
C8082 DURHAM     63 EAGLE CITY ******************************                                                                 1/2        3
C8607 DURHAM     63 EAGLE CITY ******************************                                                                 1/2        3
                                                        .
C8578 FERGUSON   64 EAGLE CITY *************            .                                                                  1/2 2-7    ?
C7000 FERGUSON W 64 EAGLE CITY *************            .                                                                  1/2 1-18   3
C8747 FERGUSON   64 EAGLE CITY **************           .                                                                  1/2        3
C8518 FERGUSON   64 EAGLE CITY ******************       .                                                                  1/2 8-17   3
C8830 FERGUSON   64 EAGLE CITY ******************       .                                                                  1/2        3
C8197 FERGUSON   64 EAGLE CITY ******************       .                                                                  1/2        3
C8135 FERGUSON   64 EAGLE CITY ******************       .                                                                  1/2        3
C8611 FERGUSON   64 EAGLE CITY ******************       .                                                                  1/2        3
C8157 FERGUSON   64 EAGLE CITY ******************       .                                                                  1/2        3
C8568 FERGUSON   64 EAGLE CITY ******************       .                                                                  1/2 8-17   3
C8577 FERGUSON   64 EAGLE CITY *********************    .                                                                  1/2        3
C8534 FERGUSON   64 EAGLE CITY *********************    .                                                                  1/2        3
C8516 FERGUSON   64 EAGLE CITY *********************    .                                                                  1/2        3
C8801 FERGUSON   64 EAGLE CITY *********************    .                                                                  1/2        3
C8927 FERGUSON   64 EAGLE CITY *********************    .                                                                  1/2 1-17
C8926 FERGUSON   64 WASSONVLE  *********************    .                                                                  1/2 1-7
C8253 FERGUSON   64 EAGLE CITY **********************   .                                                                  1/2        3
```

GRAPH OF PORE INDEX 14.0 MINUTE LOAD FROM 01 MIN TO 15 MIN 10
IN SEQUENCE BY PORE INDEX WITHIN QUARRY WITHIN COUNTY 16:57 MONDAY, JANUARY 14, 1980
WENDELL DUBBERKE 1-515-296-1339 IOWA DOT AMES, IOWA

```
LABNO QUARRY     CO UNIT     00        10        20        30        40        50        60        70        80        SIZE/BED/SERV

C8273 FERGUSON   64 EAGLE CITY **********************  .                                                                  1/2        3
C8104 FERGUSON   64 EAGLE CITY **********************  .                                                                  1/2        3
C8642 FERGUSON   64 EAGLE CITY **********************  .                                                                  1/2        3
C7000 FERGUSON   64 EAGLE CITY **********************  .                                                                  1/2 1-18   3
C8730 FERGUSON   64 EAGLE CITY **********************  .                                                                  1/2        3
C8930 FERGUSON   64 EAGLE CITY ***********************  .                                                                  1/2
C8928 FERGUSON   64 EAGLE CITY ***********************  .                                                                  1/2 1-17
C8710 FERGUSON   64 EAGLE CITY ***********************  .                                                                  1/2        3
C7000 FERGUSON S 64 EAGLE CITY ***********************  .                                                                  1/2 1-18   3
C8295 FERGUSON   64 EAGLE CITY ***********************  .                                                                  1/2        3
C8844 FERGUSON   64 EAGLE CITY ************************ .                                                                  1/2        3
C7000 FERGUSON E 64 EAGLE CITY ************************ .                                                                  1/2 1-18   3
C8839 FERGUSON   64 EAGLE CITY *************************.                                                                  1/2        3
C8334 FERGUSON   64 EAGLE CITY *************************.                                                                  1/2        3
C8647 FERGUSON   64 EAGLE CITY *************************.                                                                  1/2        3
C7000 FERGUSON N 64 EAGLE CITY *************************.                                                                  1/2 1-18   3
C7000 FERGUSON N 64 EAGLE CITY *************************.                                                                  1/2 1-18   3
C7000 FERGUSON E 64 EAGLE CITY *************************.                                                                  1/2 1-18   3
C7000 FERGUSON W 64 EAGLE CITY **************************                                                                  1/2 1-18   3
C8547 FERGUSON   64 EAGLE CITY **************************                                                                  1/2        3
C8095 FERGUSON   64 EAGLE CITY ***************************                                                                  1/2        3
C8289 FERGUSON   64 EAGLE CITY ***************************                                                                  1/2        3
C8455 FERGUSON   64 EAGLE CITY ****************************                                                                  1/2        3
C8894 FERGUSON   64 EAGLE CITY ********************************                                                                1/2
C8940 FERGUSON   64 EAGLE CITY *********************************                                                                1/2        3
C8155 FERGUSON   64 EAGLE CITY ***********************************                                                                1/2        3
                                                                .
C8063 DUENOW     66 CORALVILLE **********                       .                                                                1/2        3
C8598 DUENOW     66 CORALVILLE **********                       .                                                                1/2        3
C8669 DUENOW     66 CORALVILLE **********                       .                                                                1/2        3
C8079 DUENOW     66 CORALVILLE ************                     .                                                                1/2        3
C8413 DUENOW     66 CORALVILLE *****************                .                                                                1/2        3
C8411 DUENOW     66 CORALVILLE ******************               .                                                                1/2        3
                                                                .
C8670 LESCH      66 CORALVILLE ****************************************                                                          1/2        ?
                                                                .
C8929 STENNETT   69 SPRING BR  ***************************************************************************************************1/2*7-9  *
                                                                .
C8925 MOSCOW     70 WAPSI      **********                       .                                                                1/2
C8635 MOSCOW     70 WAPSI      *************                    .                                                                1/2        3
C8913 MOSCOW     70 WAPSI      *************                    .                                                                1/2 11-15
C8291 MOSCOW     70 WAPSI      **************                   .                                                                1/2        3
C8166 MOSCOW     70 WAPSI      ***************                  .                                                                1/2        3
C8682 MOSCOW     70 WAPSI      ***************                  .                                                                1/2        3
C8682 MOSCOW     70 WAPSI      ***************                  .                                                                1/2        3
C8811 MOSCOW     70 WAPSI      ****************                 .                                                                1/2        3
C8878 MOSCOW     70 WAPSI      ****************                 .                                                                1/2
                                                                .
C8105 GIL CTY H  76 GIL CITY   ********                         .                                                                1/2        3
C8169 GIL CTY H  76 GIL CITY   ********                         .                                                                1/2        3
C8148 GIL CTY H  76 GIL CITY   **********                       .                                                                1/2        3
C8648 GIL CTY H  76 GIL CITY   **************                   .                                                                1/2        3
```

GRAPH OF PORE INDEX 14.3 MINUTE LOAD FROM 01 MIN TO 15 MIN
IN SEQUENCE BY PORE INDEX WITHIN QUARRY WITHIN COUNTY
WENDELL DUBBERKE 1-515-296-1339 IOWA DOT AMES, IOWA

16:57 MONDAY, JANUARY 14, 1980

LABNO	QUARRY	CO	UNIT	00 10 20 30 40 50 60 70 80	SIZE	BED	SERV
C6626	GIL CTY H	76	GIL CITY	**********	1/2		3
C6401	GIL CTY H	76	GIL CITY	**********	1/2		3
C8782	GIL CTY H	76	GIL CITY	**********	1/2	1-3	
C8702	GIL CTY H	76	GIL CITY	**********	1/2		3
C8269	GIL CTY H	76	GIL CITY	**********	1/2		3
C8466	GIL CTY H	76	GIL CITY	**********	1/2	W	3
C9731	GILMORE CY	76	GIL CITY	**********	1/2	1-3	3
C8468	GIL CTY H	76	GIL CITY	**********	1/2	S	3
C8697	GIL CTY	76	GIL CITY	**********	1/2	1-3	
C8465	GIL CTY H	76	GIL CITY	**********	1/2	E	3
C8473	GIL CTY H	76	GIL CITY	**********	1/2		3
C8467	GIL CTY H	76	GIL CITY	**********	1/2	N	3
C8212	GIL CTY H	76	GIL CITY	**********	1/2		3
C8890	GIL CTY	76	GIL CITY	**********	1/2	1-5	
C8637	GIL CTY	76	GIL CITY	**********	1/2		3
C8170	GIL CTY MW	76	GIL CITY	**********	1/2		3
C8627	GIL CTY MW	76	GIL CITY	**********	1/2		3
C8870	GIL CTY MW	76	GIL CITY	**********	1/2		3
C8869	GIL CTY	76	GIL CITY	**********	1/2	1-5	
C9062	CRESCENT	78	BETH FALLS	**********	1/2		1
C8685	CRESCENT	78	BETH FALLS	**********	1/2		1
C8687	CRESCENT	78	BETH FALLS	**********	1/2		1
C8696	CRESCENT	78	BETH FALLS	**********	1/2		1
C8689	CRESCENT	78	BETH FALLS	**********	1/2		1
C8414	MALCOM	79	EAGLE CITY	*****	1/2		3
C8817	MALCOM	79	EAGLE CITY	*********	1/2		3
C8776	MALCOM	79	EAGLE CITY	**********	1/2	10C13	
C8119	MALCOM	79	EAGLE CITY	**********	1/2		3
C8709	MALCOM	79	EAGLE CITY	**********	1/2		3
C8089	MALCOM	79	EAGLE CITY	**********	1/2		3
C8519	MALCOM	79	EAGLE CITY	**********	1/2		3
C8674	MCCAUSLAND	82	GOWER	**********	1/2		3
C8593	LE CLAIRE	82	GOWER	**	1/2		3
C8038	LECLAIRE	82	GOWER	*****	1/2		3
C8630	LECLAIRE	82	GOWER	*****	1/2		3
C8360	LECLAIRE	82	GOWER	******	1/2		3
C8597	LECLAIRE	82	GOWER	*******	1/2	3-5	
C8069	LECLAIRE	82	GOWER	*********	1/2		3
C8127	BUFFALO	82	WAPSI	********	1/2		3
C8525	LINWOOD	82	WAPSI	**********	1/2		3
C9007	LINWOOD	82	WAPSI	**********	1/2		3
C9039	AMES MINE	85	GIL CITY	**********	1/2		3
C9036	AMES MINE	85	GIL CITY	**********	1/2		3
C9035	AMES MINE	85	GIL CITY	**********	1/2		3
C8772	AMES MINE	85	GIL CITY	**********	1/2		3

GRAPH OF PORE INDEX 14.0 MINUTE LOAD FROM 01 MIN TO 15 MIN
IN SEQUENCE BY PORE INDEX WITHIN QUARRY WITHIN COUNTY
WENDELL DUBBERKE 1-515-296-1339 IOWA DOT AMES, IOWA

16:57 MONDAY, JANUARY 14, 1980

LABNO	QUARRY	CO	UNIT	00 10 20 30 40 50 60 70 80	SIZE/BED/SERV	
C8214	MONTOUR	86	CHAPIN	**********	1/2	3
C8025	MONTOUR	86	CHAPIN	**********	1/2	3
C9022	CRUSHED PC	87	CRUSHED PC	**********	1/2	?
C9022	CRUSHED PC	87	CRUSHED PC	**********	1/2	?
C8256	DOUDS	89	SPERGEN	*****	1/2	3
C8526	DOUDS MINE	89	SPERGEN	**********	1/2	3
C8346	DOUDS	89	SPERGEN	**********	1/2	10A15
C8502	DOUDS MINE	89	SPERGEN	**********	1/2	3
C8499	DOUDS MINE	89	SPERGEN	**********	1/2	3
C8330	DOUDS	89	SPERGEN	**********	1/2	3
C8750	DOUDS MINE	89	SPERGEN	**********	1/2	3
C8527	DOUDS MINE	89	SPERGEN	**********	1/2	3
C9310	DOUDS MINE	89	SPERGEN	**********	1/2	2
C8909	DOUDS	89	SPERGEN	**********	1/2	
C8331	DOUDS	89	SPERGEN	**********	1/2	3
C8535	DOUDS MINE	89	SPERGEN	**********	1/2	3
C8160	DOUDS MINE	89	SPERGEN	**********	1/2	3
C8453	DOUDS	89	SPERGEN	**********	1/2	3
C8751	DOUDS MINE	89	SPERGEN	**********	1/2	3
C8536	DOUDS MINE	89	SPERGEN	**********	1/2	3
C8161	DOUDS	89	SPERGEN	**********	1/2	3
C8251	DOUDS	89	SPERGEN	**********	1/2	3
C8294	DOUDS	89	SPERGEN	**********	1/2	3
C8448	DOUDS	89	SPERGEN	**********	1/2	3
C8096	DOUDS	89	SPERGEN	**********	1/2	3
C8042	DOUDS	89	SPERGEN	**********	1/2	3
C9570	FARMINGTON	89	ST GEN	**********	1/2 3A-3E	3
C9357	FARMINGTON	89	ST GEN	**********	1/2 3A-3E	3
C8777	FARMINGTON	89	ST GEN	**********	1/2 3A-G	
C8080	FARMINGTON	89	ST GEN	**********	1/2	3
C8766	FARMINGTON	89	ST GEN	**********	1/2 3G	?
C8122	WESTCHESTR	92	BURLINGTON	****	1/2	3
C8167	WESTCHESTR	92	BURLINGTON	*****	1/2	3
C8213	FT DODGE	94	GIL CITY	**********	1/2	3
C8146	FT DODGE	94	GIL CITY	**********	1/2	3
C8426	FT DODGE W	94	GIL CITY	**********	1/2	3
C8658	FT DODGE	94	GIL CITY	**********	1/2	3
C8610	FT DODGE	94	GIL CITY	**********	1/2	3
C8427	FT DODGE N	94	GIL CITY	**********	1/2	3
C8062	FT DODGE	94	GIL CITY	**********	1/2	3
C8425	FT DODGE E	94	GIL CITY	**********	1/2	3
C8638	FT DODGE	94	GIL CITY	**********	1/2	3
C8533	FT DODGE	94	GIL CITY	**********	1/2	3
C8780	FT DODGE	94	GIL CITY	**********	1/2	3
C8403	FT DODGE	94	GIL CITY	**********	1/2	3
C9005	FT DODGE	94	GIL CITY	**********	1/2	3

GRAPH OF PORE INDEX 14.0 MINUTE LOAD FROM 01 MIN TO 15 MIN 13
IN SEQUENCE BY PORE INDEX WITHIN QUARRY WITHIN COUNTY 16:57 MONDAY, JANUARY 14, 1980
WENDELL DUBBERKE 1-515-296-1339 IOWA DOT AMES, IOWA

```
LABNO QUARRY     CO UNIT      00        10        20        30        40        50        60        70        80        SIZE/BED/SERV

C8428 FT DODGE S 94 GIL CITY   ********************    .                                                                  1/2        3
C8678 FT DODGE   94 GIL CITY   ********************    .                                                                  1/2        3
C8347 FT DODGE   94 GIL CITY   *********************   .                                                                  1/2        3
C8036 FT DODGE   94 GIL CITY   **********************  .                                                                  1/2        3
C8011 FT DODGE   94 GIL CITY   ********************************                                                            1/2        3
                                                      .
C9689 YATES      94 ST LOUIS   ********************************                                                            1/2 2-10   ?
                                                      .
C8140 ANDERSON   96 STEWARTVLE ****************       .                                                                  1/2        2
C8622 ANDERSON   96 STEWARTVLE ********************   .                                                                  1/2        3
C8237 ANDERSON   96 STEWARTVLE ************************ .                                                                  1/2        3
                                                      .
C8668 NORTHWOOD  98 CORALVILLE ****************       .                                                                  1/2 MINN   3
C8480 NORTHWOOD  98 CORALVILLE ******************      .                                                                  1/2        3
C8663 NORTHWOOD  98 CORALVILLE *******************     .                                                                  1/2 COMM   3
C8666 NORTHWOOD  98 CORALVILLE *******************     .                                                                  1/2 MINN   3
C8478 NORTHWOOD  98 CORALVILLE ********************    .                                                                  1/2        3
C8479 NORTHWOOD  98 CORALVILLE ********************    .                                                                  1/2        3
C8664 NORTHWOOD  98 CORALVILLE ********************    .                                                                  1/2 COMM   3
C8667 NORTHWOOD  98 CORALVILLE **********************  .                                                                  1/2 MINN   3
C8477 NORTHWOOD  98 CORALVILLE **********************  .                                                                  1/2        3
C8665 NORTHWOOD  98 CORALVILLE ************************ .                                                                  1/2 COMM   3
C8665 NORTHWOOD  98 CORALVILLE ************************ .                                                                  1/2 6-7    3
C8653 NORTHWOOD  98 CORALVILLE ****************************                                                                1/2 RERUN  3
C8660 NORTHWOOD  98 CORALVILLE ****************************                                                                1/2 RM     3
C8662 NORTHWOOD  98 CORALVILLE ****************************                                                                1/2 RM     3
C8661 NORTHWOOD  98 CORALVILLE ********************************                                                            1/2 RM     3
C8653 NORTHWOOD  98 CORALVILLE ********************************                                                            1/2        3
                                                      .
C8298 RANDALL    98 CORALVILLE *************          .                                                                  1/2        3
                                                      .
C8462 FERTILE    98 CORALVILLE ****************       .                                                                  1/2        3
C8459 FERTILE    98 CORALVILLE ********************    .                                                                  1/2        3
C8624 FERTILE    98 CORALVILLE ************************ .                                                                  1/2        3
C9045 FERTILE    98 CORALVILLE ********************************                                                            1/2        3
```