Iowa Department of Transportation
Highway Division

H30SI–05 PRETENSIONED PRESTRESSED CONCRETE BEAM BRIDGE STANDARDS

INDEX FOR H30SI-05 STANDARDS:

H30SI-01-05	INDEX, GENERAL NOTES & GENERAL INFORMATION
H30SI-02-05	SUPERSTRUCTURE DETAILS
H30SI-03-05	ABUTMENT DETAILS - 0° SKEW A & B BEAMS
H30SI-04-05	ABUTMENT DETAILS - 0° SKEW C & D BEAMS
H30SI-05-05	LONGITUDINAL SECTION 0° SKEW A & B BEAMS
H30SI-06-05	LONGITUDINAL SECTION 0° SKEW C & D BEAMS
H30SI-07-05	SUPERSTRUCTURE 0° SKEW
H30SI-08-05	DECK AND ABUTMENT REINFORCMENT 0° SKEW
H30SI-09-05	DECK AND ABUTMENT REINFORCMENT 0° SKEW
H30SI-10-05	ABUTMENT DETAILS - 15° SKEW A & B BEAMS
H30SI-11-05	ABUTMENT DETAILS - 15° SKEW C & D BEAMS
H30SI-12-05	LONGITUDINAL SECTION 15° SKEW A & B BEAMS
H30SI-13-05	LONGITUDINAL SECTION 15° SKEW C & D BEAMS
H30SI-14-05	SUPERSTRUCTURE 15° SKEW
H30SI-15-05	DECK AND ABUTMENT REINFORCMENT 15° SKEW
H30SI-16-05	DECK AND ABUTMENT REINFORCMENT 15° SKEW
H30SI-17-05	ABUTMENT DETAILS - 30° SKEW A & B BEAMS
H30SI-18-05	ABUTMENT DETAILS - 30° SKEW C & D BEAMS
H30SI-19-05	LONGITUDINAL SECTION 30° SKEW A & B BEAMS
H30SI-20-05	LONGITUDINAL SECTION 30° SKEW C & D BEAMS
H30SI-21-05	SUPERSTRUCTURE 30° SKEW
H30SI-22-05	DECK AND ABUTMENT REINFORCMENT 30° SKEW
H30SI-23-05	DECK AND ABUTMENT REINFORCMENT 30° SKEW
H30SI-24-05	LXA BEAM DETAILS
H30SI-25-05	LXA46-LXA55 BEAM DETAILS
H30SI-26-05	LXB BEAM DETAILS
H30SI-27-05	LXB67 BEAM DETAILS
H30SI-28-05	LXC BEAM DETAILS
H30SI-29-05	LXC80 BEAM DETAILS
H30SI-30-05	LXD BEAM DETAILS
H30SI-31-05	LXD90 & LXD100 BEAM DETAILS
H30SI-32-05	LXD110 BEAM DETAILS
H30SI-33-05	INTERMEDIATE STEEL DIAPHRAGMS
H30SI-34-05	BARRIER RAIL DETAILS SHEET 1 OF 3
H30SI-35-05	BARRIER RAIL DETAILS SHEET 2 OF 3
H30SI-36-05	BARRIER RAIL DETAILS SHEET 3 OF 3
H30SI-37-05	OPEN RAIL DETAILS SHEET 1 OF 2
H30SI-38-05	OPEN RAIL DETAILS SHEET 2 OF 2

EXAMPLES OF BRIDGE SEAT AND STEP CALCULATIONS:

THE DESIGNER SHALL SHOW ON THE PLANS THE 5 ELEVATIONS AND THE 4 STEP DIMENSIONS REQUIRED FOR THE ABUTMENT BRIDGE SEATS.

THE BOXED IN DETAILS IN THE FOLLOWING EXAMPLES SHOW HOW THE INFORMATION SHOULD BE INDICATED ON THE PLANS.

EXAMPLE NO. 1

A STRAIGHT GRADE OF -3.25% WITH THE P.I. STATION OF 103+75.00 AND ELEVATION OF 653.29. THE BRIDGE LENGTH IS 80'-0 ℄ TO ℄ OF ABUTMENT BEARINGS WITH 30° SKEW RIGHT AHEAD.

STATIONS

℄ BRIDGE STA.	=	105+85.00	
℄ $\frac{1}{2}$ OF SPAN LENGTH	±	40.00	
℄ ABUT. BRGS.	=	106+25.00	105+45.00

ELEVATIONS ALONG PROFILE GRADE LINE (P.G.L. ELEV.)

℄ ABUT. BRG. = 653.29-[(105+45.00)-(103+75.00)](0.0325) = 647.77

℄ ABUT. BRG. = 653.29-[(106+25.00)-(103+75.00)](0.0325) = 645.17

ELEVATIONS TOP OF SLAB FACING ALONG THE STATIONING

(BEAM SPACING)(TAN. SK. △)(GRADE) = (7.0)TAN 30°(0.0325) = 0.13'

ABUTMENT NO. 1

BEAMS	EXTERIOR	INTERIOR	CENTER	INTERIOR	EXTERIOR
PGL ELEV.	647.77	647.77	647.77	647.77	647.77
SK. △CORRECT	+ 0.26	+ 0.13	0.00	- 0.13	- 0.26
SLAB CROWN	- 0.19	- 0.08	0.00	- 0.08	- 0.19
TOP SLAB ELEV.	647.84	647.82	647.77	647.56	647.32
-"U" (4'-$9\frac{1}{8}$")	- 4.76	- 4.76	- 4.76	- 4.76	- 4.76
BR. SEAT ELEV.	643.08	643.06	643.01	642.80	642.56

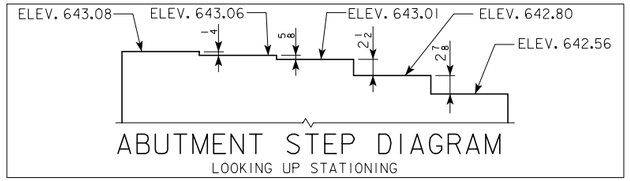

ABUTMENT STEP DIAGRAM

LOOKING UP STATIONING

EXAMPLE NO. 2

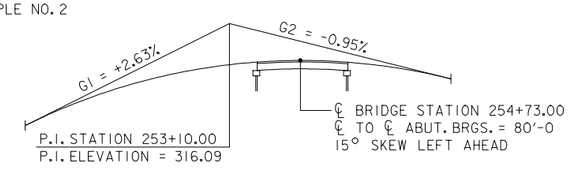

FROM SHEET H30SI-1 { LENGTH OF VERTICAL CURVE = (20000)(0.0358) = 716 FEET
M.O. = (0.0358)(716)($\frac{1}{8}$) = 3.204 FEET

STATIONS

℄ BRIDGE STA.	=	254+73.00		P.I. STA.	253+10.00
℄ $\frac{1}{2}$ OF SPAN LENGTH	±	40.00		±($\frac{1}{2}$)(LENGTH V.C.)	3+58.00
℄ ABUT. BRGS.	=	255+13.00	254+33.00	P.C. STA.	249+52.00
				P.T. STA.	256+68.00

ELEVATIONS TOP OF SLAB FACING ALONG THE STATIONING

(BEAM SPACING)(TAN. SK.△) = (7.0)TAN 15° = 1.88'

ABUTMENT NO. 1

BEAMS	EXTERIOR	INTERIOR	CENTER	INTERIOR	EXTERIOR
STATION	254+36.75	254+34.88	254+33.00	254+31.12	254+29.25
PGL ELEV.	313.55	313.54	313.54	313.54	313.53
SLAB CROWN	- 0.19	- 0.08	0.00	- 0.08	- 0.19
TOP SLAB ELEV.	313.36	313.46	313.54	313.46	313.34
-"U" (4'-$8\frac{11}{16}$")	- 4.72	- 4.72	- 4.72	- 4.72	- 4.72
BR. SEAT ELEV.	308.64	308.74	308.82	308.74	308.62

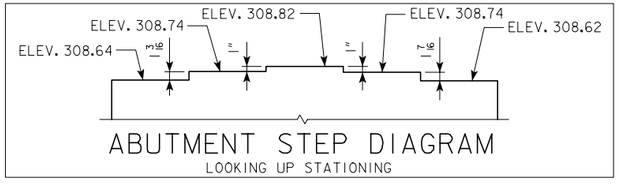

ABUTMENT STEP DIAGRAM

LOOKING UP STATIONING

GENERAL CONSIDERATIONS:

THE H30SI-05 BRIDGE STANDARDS, IF PROPERLY USED, PROVIDE THE STRUCTURAL PLANS NECESSARY TO CONSTRUCT SINGLE SPAN 30' ROADWAY PRETENSIONED PRESTRESSED CONCRETE BEAM BRIDGES WITH LENGTHS OF 46'-8, 55'-0, 67'-6, 80'-0, 90'-0, 100'-0 AND 110'-0.

THESE BRIDGES MAY BE BUILT ON A 0°, 15° OR 30° SKEW. THESE PLANS SHOW THE BRIDGES SKEWED IN ONE DIRECTION, BUT ALL DIMENSIONS AND DETAILS WOULD BE THE SAME FOR THE OPPOSITE SKEW.

FOR CLARITY, MOST SECTIONS SHOWN ON THE FOLLOWING SHEETS ARE DRAWN WITH BARRIER RAIL ONLY. THESE SECTIONS WILL BE IDENTICAL FOR OPEN RAIL DESIGN WITH ANY MODIFICATIONS SHOWN ON SHEET H30SI-37 AND H30SI-38.

NOTE THAT WHEN APPROACH PAVEMENT IS TO BE PLACED, THE TEMPORARY PAVING BLOCKS SHALL BE REMOVED AND A PROPER JOINT FOR EXPANSION SHALL BE PROVIDED BETWEEN THE BRIDGE AND THE APPROACH PAVING.

THE ABUTMENTS FOR THESE STANDARDS HAVE BEEN DESIGNED FOR FRICTION OR POINT BEARING PILES. IT IS NECESSARY THAT THE LENGTH OF THE ABUTMENT PILES BE DESIGNATED ON THE FRONT SHEET OF THE PLANS.

THESE STANDARDS GIVE MOST OF THE INFORMATION NECESSARY TO BUILD THESE BRIDGES ON EITHER A CREST VERTICAL CURVE OR A STRAIGHT GRADE. BECAUSE OF THE INFINITE NUMBER OF GRADE POSSIBILITIES IT WILL BE NECESSARY TO SHOW ON THE PLANS THE ABUTMENT STEP DIMENSIONS. TO HELP IN OBTAINING THIS STEP INFORMATION SEE "EXAMPLES OF BRIDGE SEAT AND STEP CALCULATIONS" ON THIS SHEET.

PROVIDE TOP OF SLAB ELEVATIONS AND WING ELEVATIONS A, B AND C AS NOTED ON THE STANDARD SHEETS (LONGITUDINAL SECTION).

DESIGN STRESSES:

DESIGN STRESSES FOR THE FOLLOWING MATERIALS ARE IN ACCORDANCE WITH AASHTO STANDARD SPECIFICATIONS FOR HIGHWAY BRIDGES, SERIES OF 2002.

REINFORCING STEEL IN ACCORDANCE WITH SECTION 8, GRADE 60.

CONCRETE IN ACCORDANCE WITH SECTION 8, f'c = 3500 PSI.

FOR 30' STANDARD PRESTRESSED CONCRETE BEAMS, SEE SHEET H30SI-24-05, H30SI-26-05, H30SI-28-05, H30SI-30-05.

SPECIFICATIONS:

DESIGN: AASHTO, SERIES OF 2002.

CONSTRUCTION: IOWA DEPARTMENT OF TRANSPORTATION SPECIFICATIONS FOR HIGHWAY AND BRIDGE CONSTRUCTION, SERIES 2001, PLUS APPLICABLE GENERAL SUPPLEMENTAL SPECIFICATIONS, DEVELOPMENTAL SPECIFICATIONS, SUPPLEMENTAL SPECIFICATIONS AND SPECIAL PROVISIONS SHALL APPLY TO CONSTRUCTION WORK ON THIS PROJECT.

LATEST REVISION DATE :

APPROVED BY

STANDARD DESIGN - 30' ROADWAY, SINGLE SPAN BRIDGE

PRETENSIONED PRESTRESSED CONCRETE BEAM BRIDGES

JANUARY, 2005 HS20-44 LOADING

IOWA DEPARTMENT OF TRANSPORTATION - HIGHWAY DIVISION

INDEX, GENERAL NOTES & GENERAL INFORMATION

H30SI-01-05

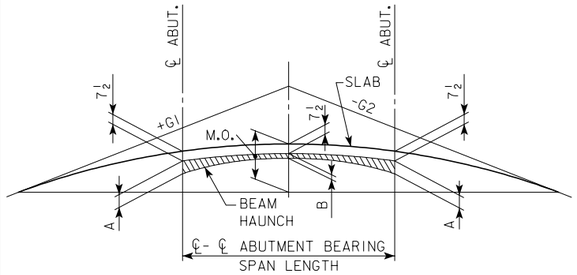

THICKNESS \ SPAN	46'-8	55'-0	67'-6	80'-0	90'-0	100'-0	110'-0
A	$1\frac{3}{16}$	$1\frac{3}{16}$	$1\frac{3}{16}$	$1\frac{3}{16}$	$\frac{13}{16}$	$1\frac{3}{8}$	$1\frac{5}{16}$
B	$\frac{1}{2}$	$\frac{1}{2}$	$\frac{1}{2}$	$\frac{1}{2}$	$\frac{1}{2}$	$\frac{1}{2}$	$\frac{1}{2}$

LENGTH OF VERTICAL CURVE REQUIRED = (20,000)(G1-G2)

M.O. = $\frac{(G1-G2)(\text{LENGTH OF V.C.})}{8}$

(G1-G2) IS THE ALGEBRAIC DIFFERENCE OF THE APPROACH GRADES EXPRESSED IN DECIMAL FORM. G1 NEED NOT HAVE THE SAME VALUE AS G2. MAXIMUM VALUE OF G1 OR G2 IS 5%. LENGTH OF CURVE AND M.O. ARE IN FEET.

SLAB AND HAUNCH THICKNESS AT BEAMS FOR VERTICAL CURVE

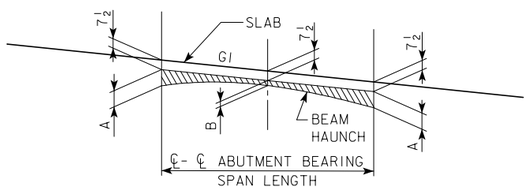

THICKNESS \ SPAN	46'-8	55'-0	67'-6	80'-0	90'-0	100'-0	110'-0
A	$1\frac{3}{8}$	$1\frac{3}{8}$	$1\frac{9}{16}$	$1\frac{5}{8}$	$1\frac{3}{8}$	$2\frac{1}{8}$	$2\frac{3}{16}$
B	$\frac{1}{2}$	$\frac{1}{2}$	$\frac{1}{2}$	$\frac{1}{2}$	$\frac{1}{2}$	$\frac{1}{2}$	$\frac{1}{2}$

G1 MAY HAVE A + OR - SIGN. THE MINIMUM NUMERICAL VALUE OF THE GRADE IS 0.3% AND THE MAXIMUM VALUE IS 8%.

SLAB AND HAUNCH THICKNESS AT BEAMS FOR STRAIGHT GRADE

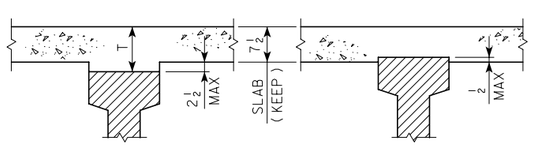

SLAB THICKNESS DETAIL

NOTE:
THE SLAB THICKNESS T AT THE BEAMS, ($7\frac{1}{2}$" SLAB PLUS HAUNCH), IS BASED ON THE ANTICIPATED BEAM CAMBER REMAINING AFTER PLACING THE SLAB, BUT IS NOT GUARANTEED FOR CONSTRUCTION. IF BEAM IS UNDER CAMBERED INCREASE THE HAUNCH THICKNESS OVER THE BEAM AT THE MIDPOINT OF THE SPANS (POINT B). IF THE BEAM IS OVER CAMBERED DECREASE THE HAUNCH THICKNESS OVER THE BEAM AT THE MIDPOINT OF THE SPANS (POINT B) TO A MAXIMUM OF $\frac{1}{2}$" EMBEDMENT IN THE SLAB. IF MORE THAN $\frac{1}{2}$" EMBEDMENT IS REQUIRED OR IF THE HAUNCH EXCEEDS $2\frac{1}{2}$", THE GRADE LINE IS TO BE REVISED.

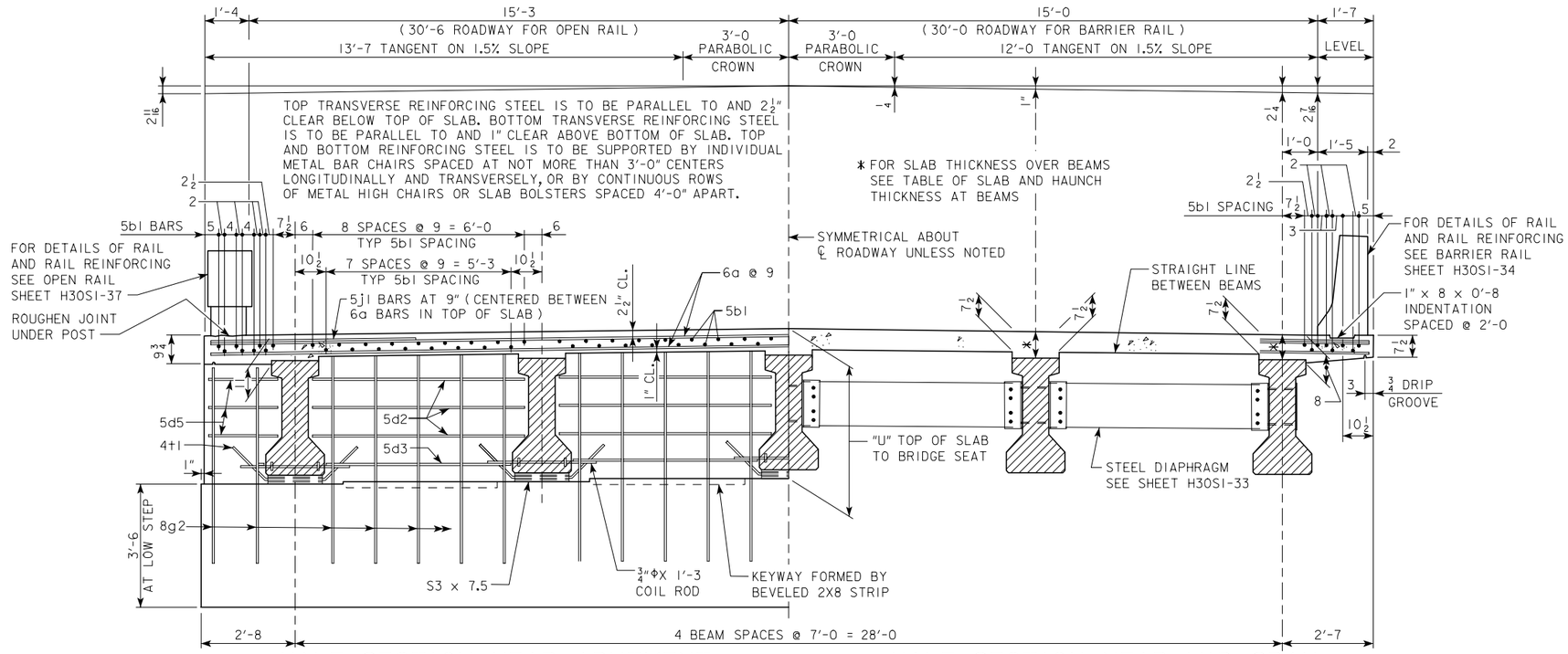

HALF SECTION NEAR ABUTMENT

SLAB CROSS SECTION AREA
FOR OPEN RAIL= 21.98 SQ. FT.

HALF SECTION NEAR MID SPAN

SLAB CROSS SECTION AREA
FOR BARRIER RAIL= 21.18 SQ. FT.

LENGTH OF S3 x 7.5

(ABUTMENT BEAM SEAT)

BEAM BOTTOM FLANGE WIDTH	LENGTH OF S3 x 7.5
1'-5	$1'-3\frac{1}{2}$
1'-8	$1'-6\frac{1}{2}$
1'-10	$1'-8\frac{1}{2}$

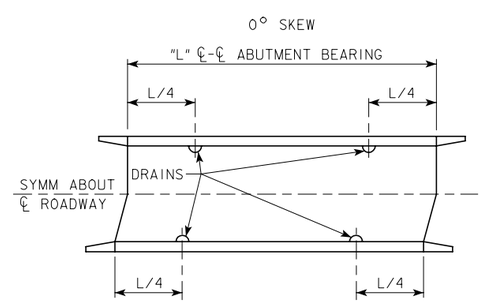

15° AND 30° SKEW

SITUATION SKETCH

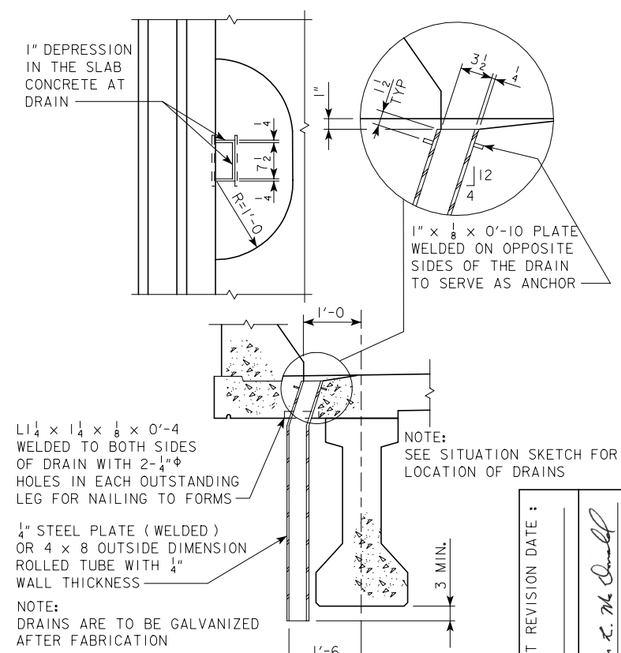

DRAIN DETAILS

(USE FOR BARRIER RAIL ONLY, NOT REQUIRED FOR OPEN RAIL)

GENERAL NOTES:

THESE BRIDGES ARE DESIGNED FOR HS20-44 LOADING PLUS 20 LBS. PER SQ. FT. OF ROADWAY FOR FUTURE WEARING SURFACE.

SLAB THICKNESS INCLUDES $\frac{1}{2}$" INTEGRAL WEARING SURFACE.

CLEAR DISTANCE FROM FACE OF CONCRETE TO NEAR REINFORCING BAR SHALL BE 2" UNLESS OTHERWISE NOTED OR SHOWN. ALL REINFORCING BARS ARE TO BE SECURELY WIRED IN PLACE AND ADEQUATELY SUPPORTED ON BAR CHAIRS BEFORE CONCRETE IS PLACED.

ALL PRESTRESSED BEAMS ARE TO BE SET VERTICAL.

FORMS FOR THE SLAB AND RAILS ARE TO BE SUPPORTED BY THE PRESTRESSED BEAMS.

COST OF DRAINS IS TO BE INCLUDED IN PRICE BID FOR STRUCTURAL STEEL.

THE ABUTMENT DIAPHRAGM CONCRETE IS TO BE PLACED MONOLITHIC WITH THE FLOOR SLAB.

ALL REINFORCING STEEL IS TO BE GRADE 60.

COST OF BEARING MATERIAL IS TO BE INCLUDED IN THE PRICE BID FOR PRETENSIONED, PRESTRESSED CONCRETE BEAM.

LATEST REVISION DATE :

APPROVED BY

STANDARD DESIGN - 30' ROADWAY, SINGLE SPAN BRIDGE

PRETENSIONED PRESTRESSED CONCRETE BEAM BRIDGES

JANUARY, 2005 HS20-44 LOADING

IOWA DEPARTMENT OF TRANSPORTATION - HIGHWAY DIVISION

SUPERSTRUCTURE DETAILS | H30S1-02-05

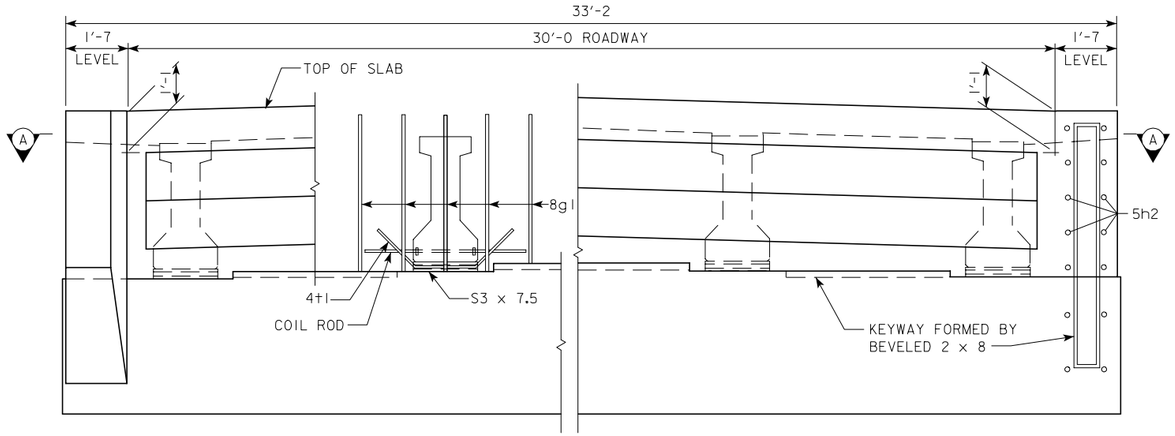

PART REAR ELEVATION AT ABUTMENT

NOTE: BARRIER RAIL NOT SHOWN.
(SHOWN FOR SOLID BARRIER RAIL)

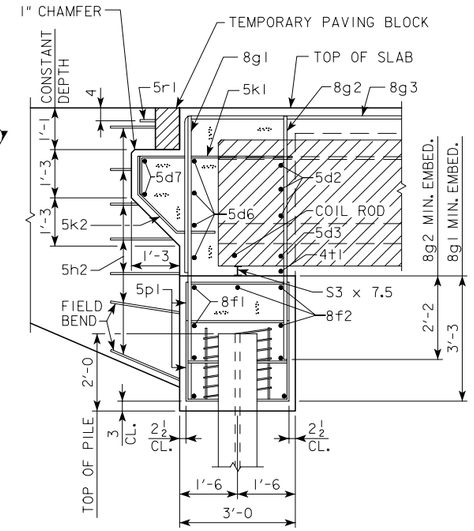

PART SECTION B-B

NOTE:
THE SPIRAL AT THE TOP OF EACH PILE TO BE 7 TURNS OF No. 2 BAR, 21" DIAMETER, 3" PITCH WITH 2 - L $\frac{7}{8} \times \frac{7}{8} \times \frac{1}{8}$ SPACERS PUNCHED TO HOLD SPIRAL.

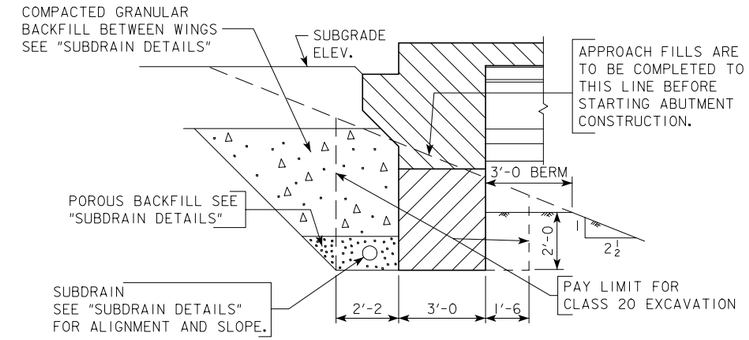

ABUTMENT EXCAVATION DETAILS

ABUTMENT NOTES:

MINIMUM CLEAR DISTANCE FROM FACE OF CONCRETE TO NEAR REINFORCING BAR IS TO BE 2" UNLESS OTHERWISE NOTED OR SHOWN.

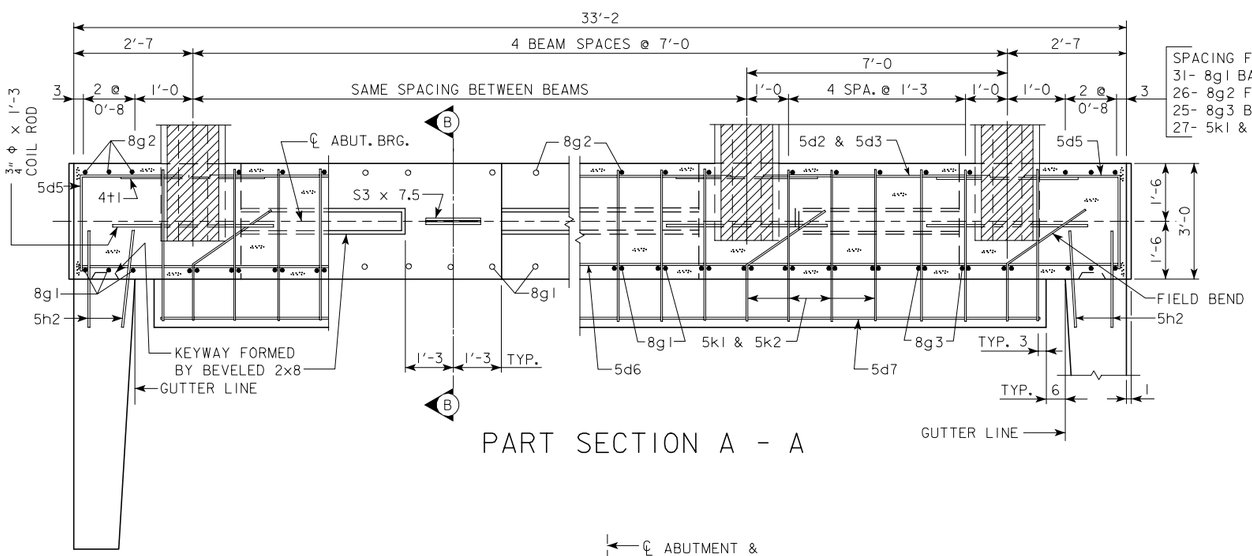

SPACING FOR:
31- 8g1 BACK FACE
26- 8g2 FRONT FACE
25- 8g3 BACK FACE
27- 5k1 & 5k2 BACK FACE

PART SECTION A - A

ABUTMENT PILE SPACING			
DIMENSION OR NO.	℄ TO ℄ ABUTMENT BEARING		
	46'-8	55'-0	67'-6
"A" PILE SPACES	5	5	6
"B" (FT. - IN.)	6'-0	6'-0	5'-0
"C" (FT. - IN.)	1'-8	1'-8	1'-8
"D" EQUAL SPACES	4	4	3
NO. OF PILES PER ABUT.	6	6	7
DESIGN PILE LOAD (TONS)	33	37	37

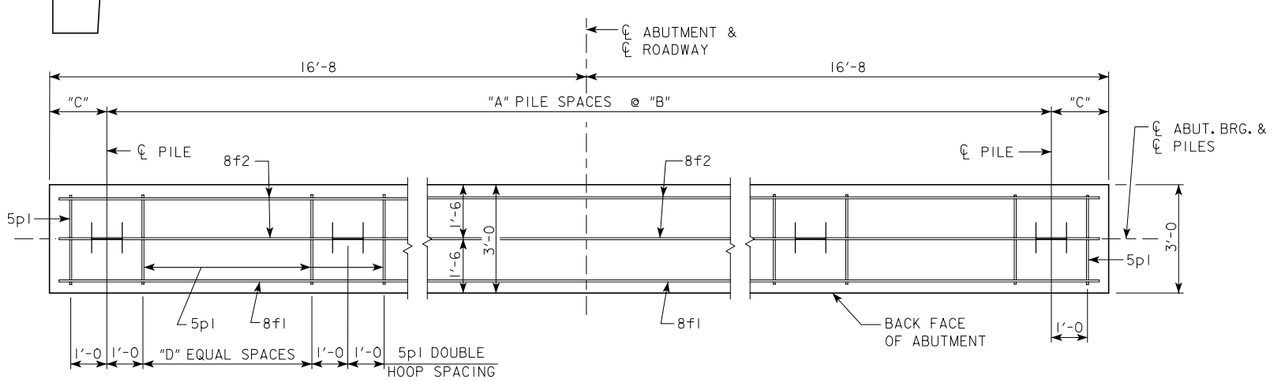

ABUTMENT PILE PLAN

LATEST REVISION DATE :

APPROVED BY

STANDARD DESIGN - 30' ROADWAY, SINGLE SPAN BRIDGE

PRETENSIONED PRESTRESSED CONCRETE BEAM BRIDGES

JANUARY, 2005 HS20-44 LOADING

IOWA DEPARTMENT OF TRANSPORTATION - HIGHWAY DIVISION

ABUTMENT DETAILS

0° SKEW A & B BEAMS

H30SI-03-05

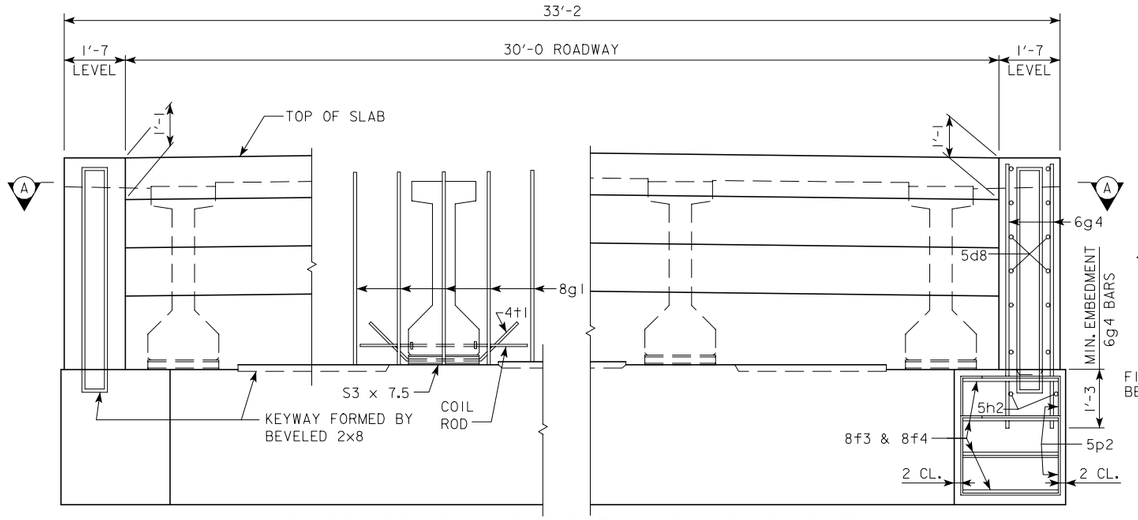

PART REAR ELEVATION AT ABUTMENT

NOTE: BARRIER RAIL AND WINGS NOT SHOWN.
(SHOWN FOR SOLID BARRIER RAIL)

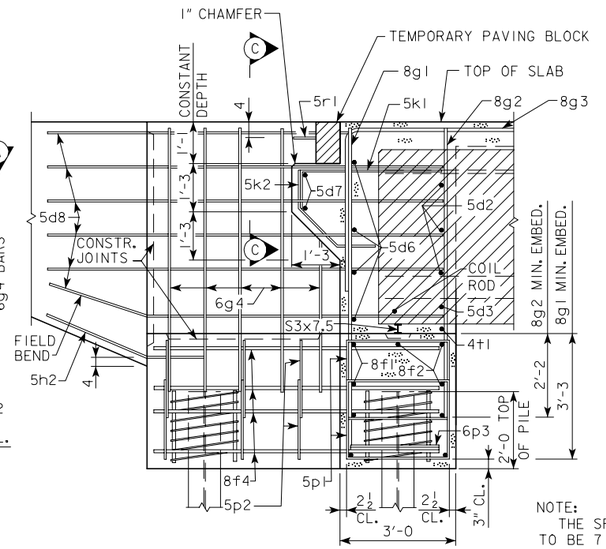

PART SECTION B - B

NOTE:
THE SPIRAL AT THE TOP OF EACH PILE TO BE 7 TURNS OF No. 2 BAR, 21" DIAMETER, 3" PITCH WITH 2 - L $\frac{7}{8} \times \frac{7}{8} \times \frac{1}{8}$ SPACERS PUNCHED TO HOLD SPIRAL.

ABUTMENT PILE SPACING

DIMENSION OR NO.	℄ TO ℄ ABUTMENT BEARING			
	80'-0	90'-0	100'-0	110'-0
"A" PILE SPACES	7	8	9	9
"B" (FT. - IN.)	4'-3	3'-9	3'-4	3'-4
"C" (FT - IN.)	1'-9½	1'-8	1'-8	1'-8
"D" EQUAL SPACES	3	2	2	2
NO. OF PILES PER ABUT.	10	11	12	12
DESIGN PILE LOAD (TONS)	36	36	34	36

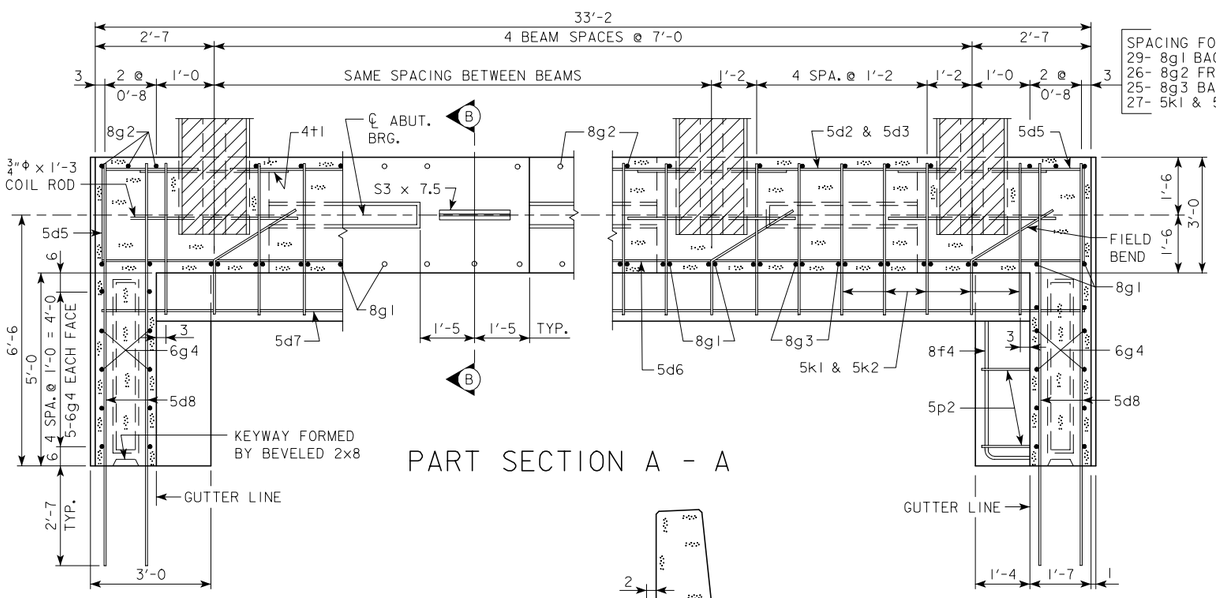

PART SECTION A - A

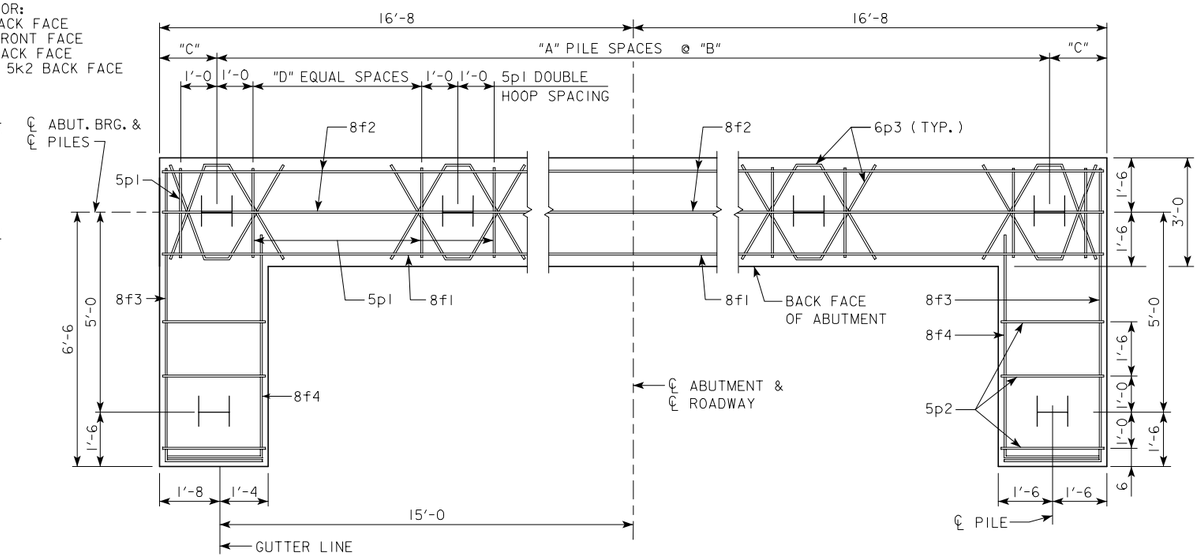

ABUTMENT PILE PLAN

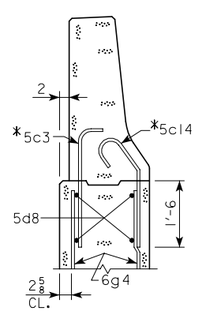

PART SECTION C-C

* NOTE: SEE BARRIER RAIL SHEET FOR DETAILS. REINFORCING BARS 5c3 AND 5c14 ARE INCLUDED IN SUPERSTRUCTURE QUANTITIES.

ABUTMENT NOTES:

MINIMUM CLEAR DISTANCE FROM FACE OF CONCRETE TO NEAR REINFORCING BAR IS TO BE 2" UNLESS OTHERWISE NOTED OR SHOWN.

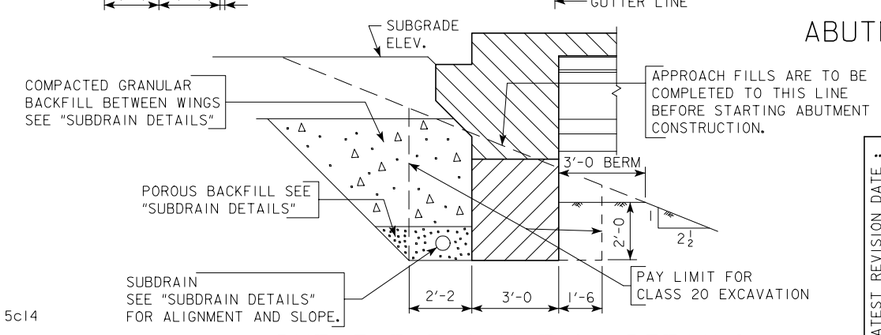

ABUTMENT EXCAVATION DETAILS

LATEST REVISION DATE :

APPROVED BY

STANDARD DESIGN - 30' ROADWAY, SINGLE SPAN BRIDGE

PRETENSIONED PRESTRESSED CONCRETE BEAM BRIDGES

JANUARY, 2005 HS20-44 LOADING

IOWA DEPARTMENT OF TRANSPORTATION - HIGHWAY DIVISION

ABUTMENT DETAILS

0° SKEW C & D BEAMS

H30SI-04-05

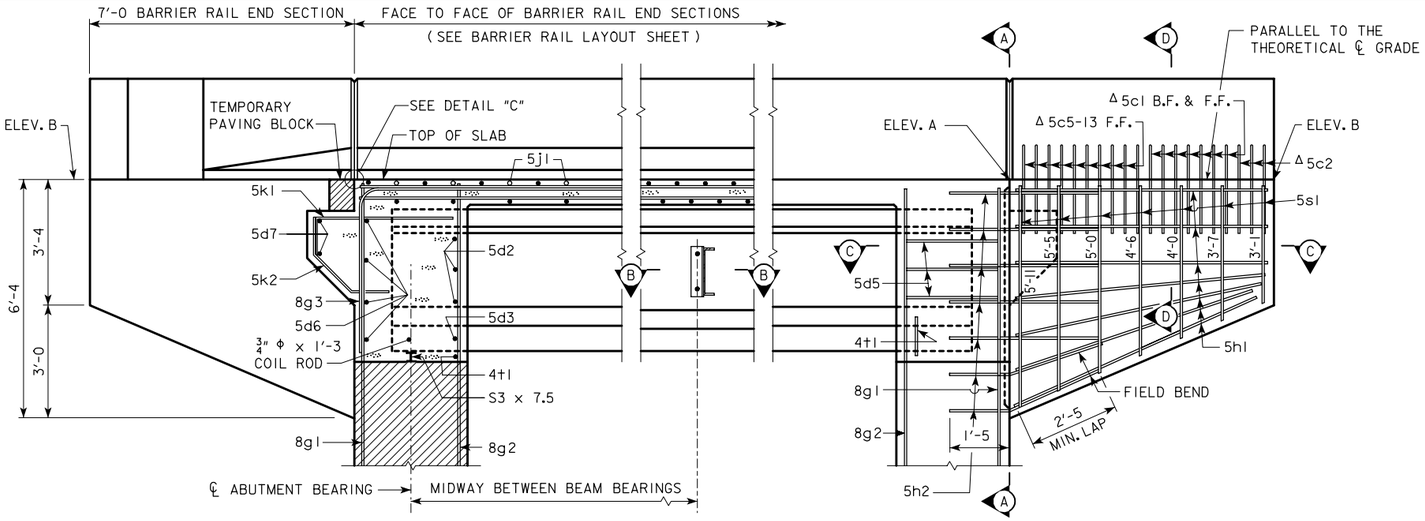

PART LONGITUDINAL SECTION NEAR GUTTER

(FOR DETAILS OF INTERMEDIATE DIAPHRAGM SEE SHEET H30SI-33)

PART END VIEW AT ABUTMENT

PROVIDE ELEVATIONS A AND B IN THE BRIDGE PLAN SHEETS.

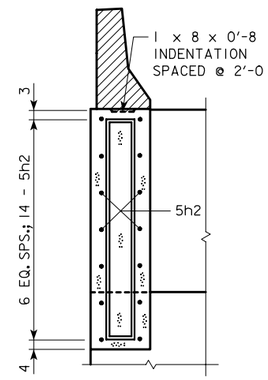

SECTION A-A

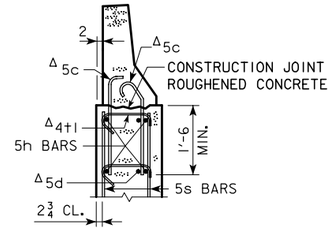

SECTION D-D

Δ NOTE:
SEE END SECTION DETAILS IN THESE PLANS FOR DETAILS OF BARRIER RAIL END SECTION AND SPACING FOR 5c BARRIER RAIL BARS. REINFORCING BARS "5c", "5d" AND "4t1" ARE INCLUDED IN THE SUPERSTRUCTURE QUANTITIES.

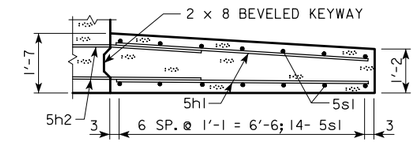

PART SECTION C-C

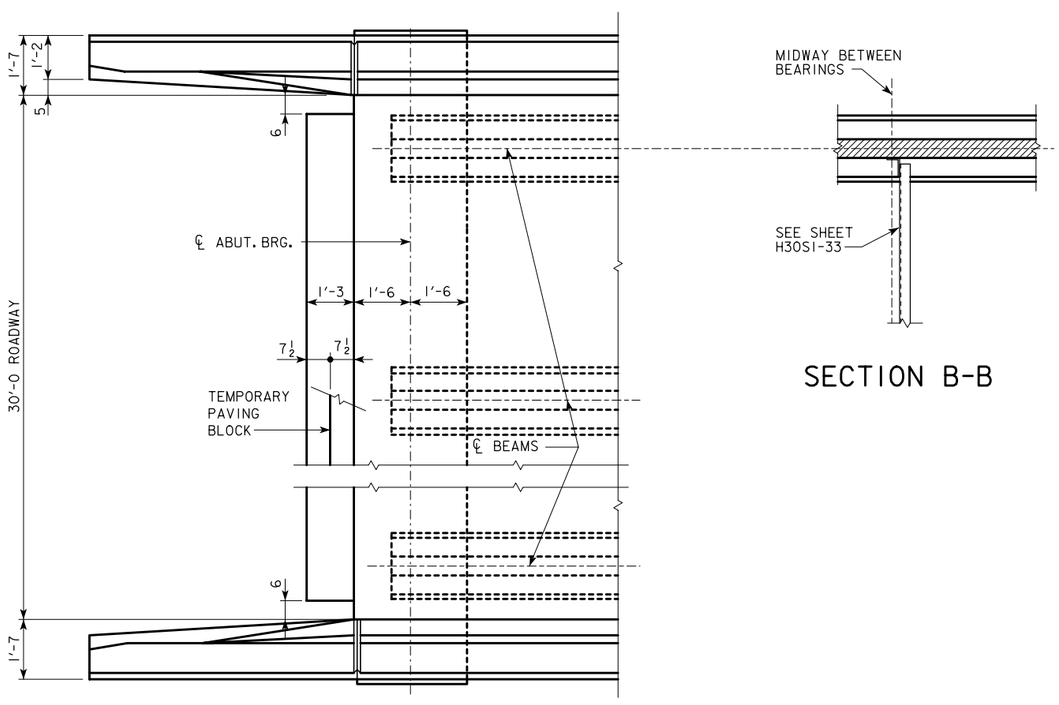

PART PLAN

SECTION B-B

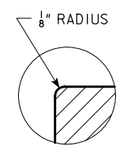

DETAIL "C"

(TEMPORARY PAVING BLOCK NOT SHOWN)

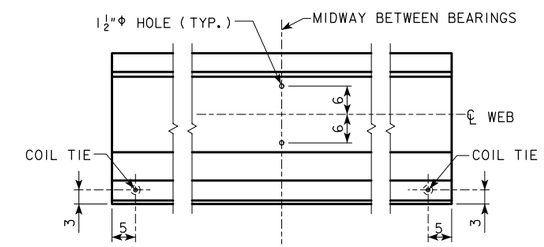

LOCATION OF BEAM COIL TIES AND STEEL DIAPHRAGM BOLT HOLES

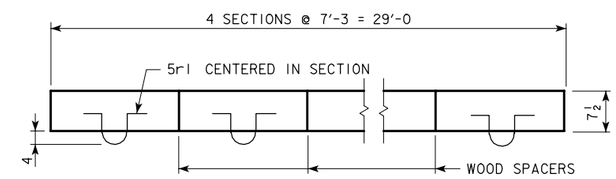

PLAN OF TEMPORARY PAVING BLOCK

NOTE: LINE PAVING NOTCH WITH TARPAPER BEFORE PLACING THE TEMPORARY PAVING BLOCK.

LATEST REVISION DATE :

APPROVED BY

STANDARD DESIGN - 30' ROADWAY, SINGLE SPAN BRIDGE

PRETENSIONED PRESTRESSED CONCRETE BEAM BRIDGES

JANUARY, 2005 HS20-44 LOADING

IOWA DEPARTMENT OF TRANSPORTATION - HIGHWAY DIVISION

LONGITUDINAL SECTION

0° SKEW A & B BEAMS

H30SI-05-05

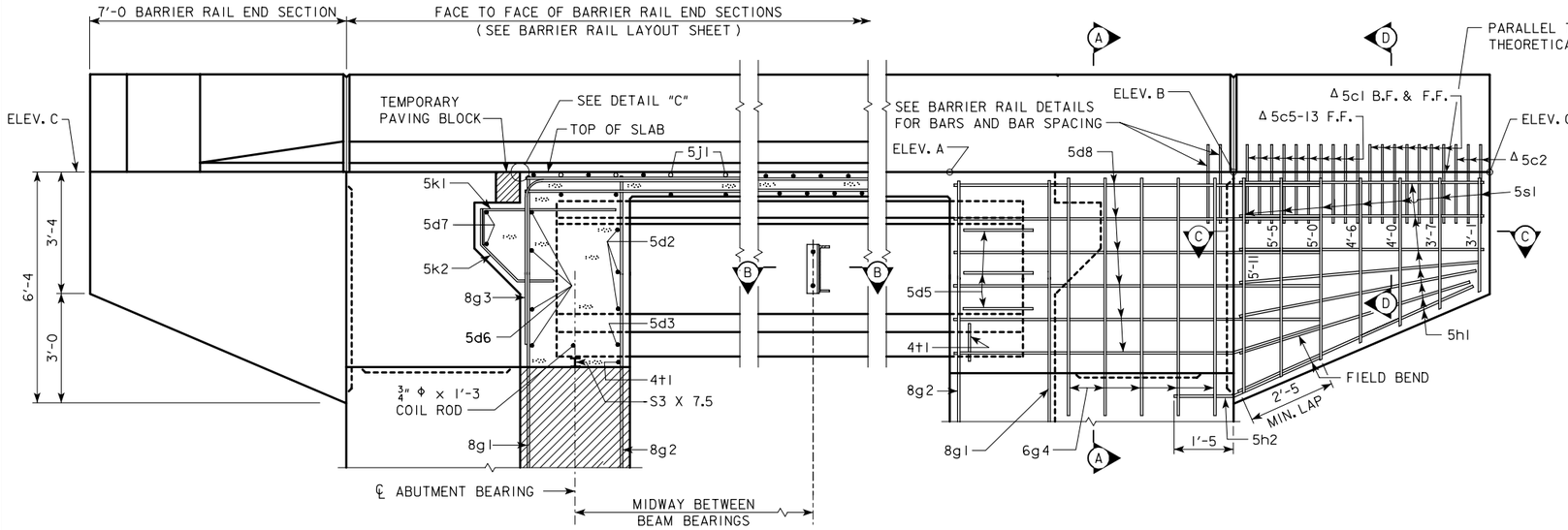

PART LONGITUDINAL SECTION NEAR GUTTER

(FOR DETAILS OF INTERMEDIATE DIAPHRAGM SEE SHEET H30SI-33)

PART END VIEW AT ABUTMENT

PROVIDE ELEVATIONS A, B, AND C IN THE BRIDGE PLAN SHEETS.

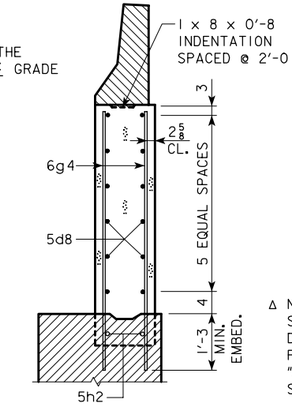

SECTION A-A

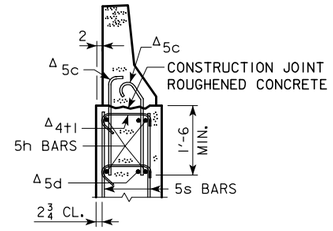

SECTION D-D

Δ NOTE:
SEE END SECTION DETAILS IN THESE PLANS FOR DETAILS OF BARRIER RAIL END SECTION AND SPACING FOR 5c BARRIER RAIL BARS. REINFORCING BARS "5c", "5d" AND "4t1" ARE INCLUDED IN THE SUPERSTRUCTURE QUANTITIES.

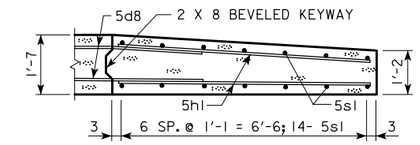

PART SECTION C-C

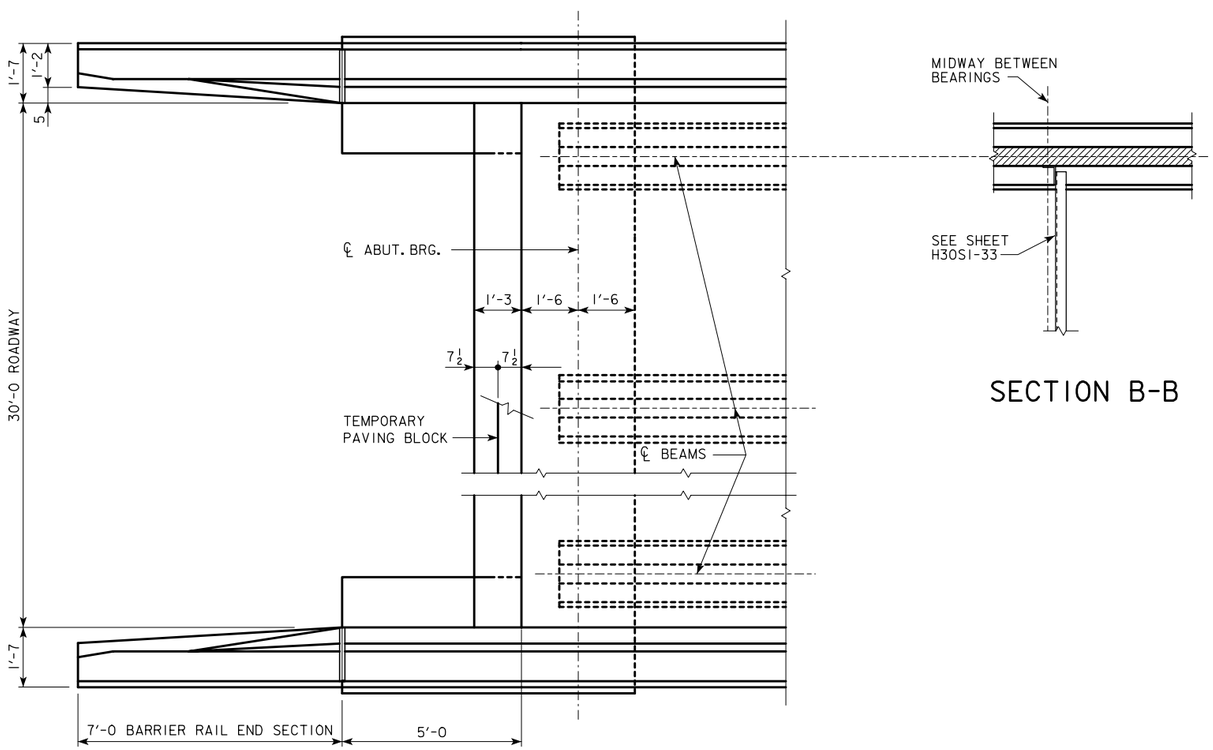

PART PLAN

SECTION B-B

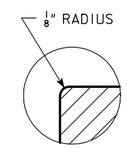

DETAIL "C"

(TEMPORARY PAVING BLOCK NOT SHOWN)

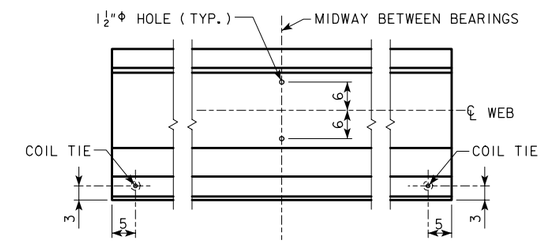

LOCATION OF BEAM COIL TIES AND STEEL DIAPHRAGM BOLT HOLES

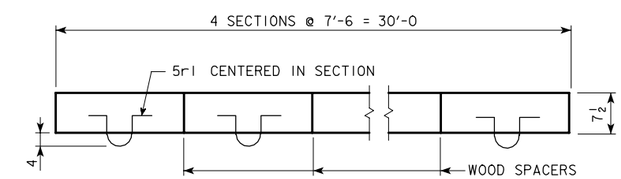

PLAN OF TEMPORARY PAVING BLOCK

NOTE: LINE PAVING NOTCH WITH TARPAPER BEFORE PLACING THE TEMPORARY PAVING BLOCK.

LATEST REVISION DATE :

APPROVED BY

STANDARD DESIGN - 30' ROADWAY, SINGLE SPAN BRIDGE

PRETENSIONED PRESTRESSED CONCRETE BEAM BRIDGES

JANUARY, 2005 HS20-44 LOADING

IOWA DEPARTMENT OF TRANSPORTATION - HIGHWAY DIVISION

LONGITUDINAL SECTION

0° SKEW C & D BEAMS

H30SI-06-05

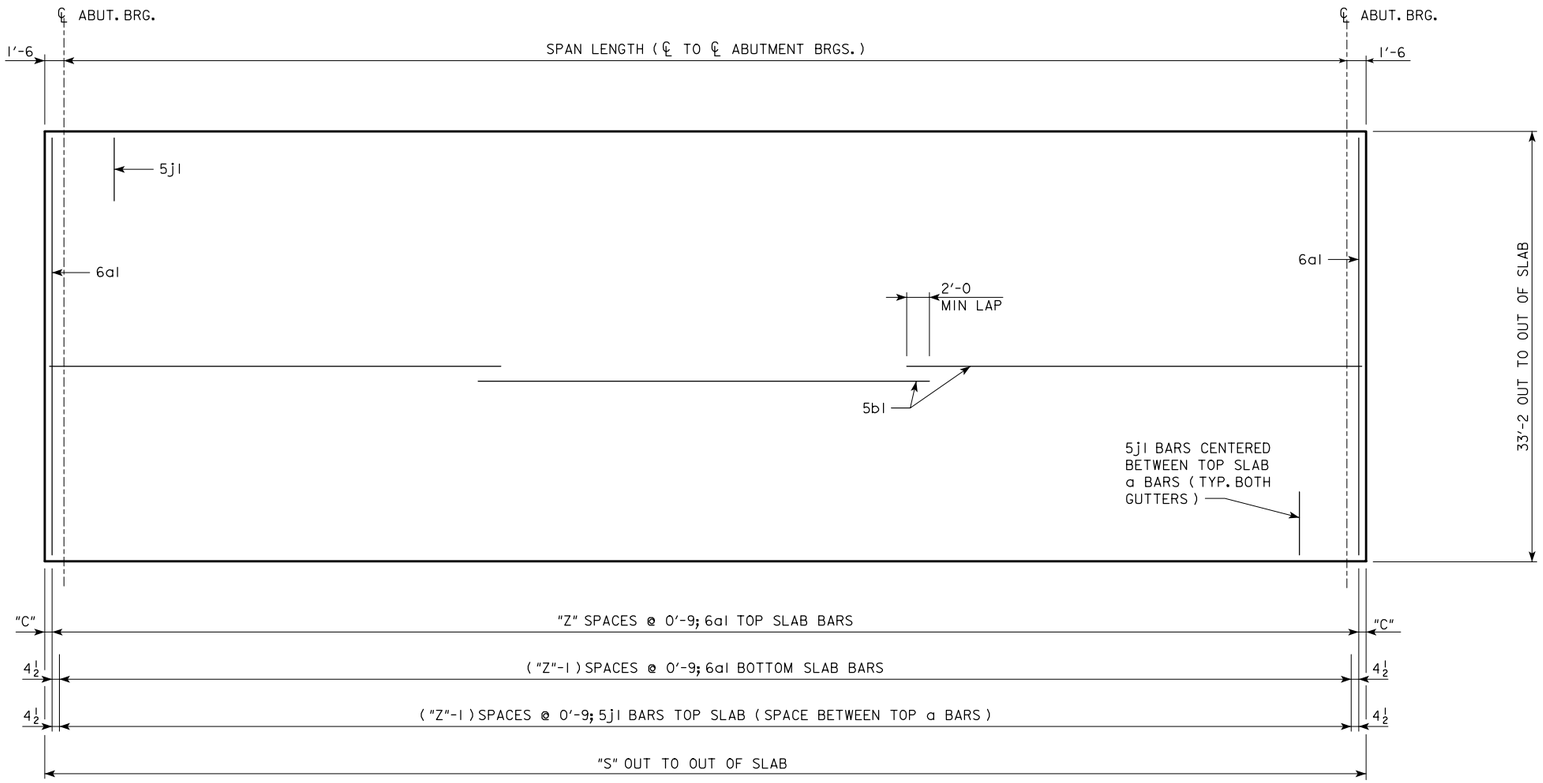

SLAB REINFORCING LAYOUT

SPAN LENGTH (℄ - ℄ ABUTMENT BRGS.)			46'-8	55'-0	67'-6	80'-0	90'-0	100'-0	110'-0
LOCATION OF EXTREME 6a1 TOP BAR FROM END OF SLAB		"C"	5½	6	4½	3	4½	6	3
NO. OF SPACES FOR 6a1 TOP BARS		"Z"	65	76	93	110	123	136	150
OUT TO OUT OF SLAB		"S"	49'-8	58'-0	70'-6	83'-0	93'-0	103'-0	113'-0
VERTICAL CURVE	TOP OF SLAB TO ABUTMENT TOP AT ℄ ABUTMENT BEARING	"U"	3'-7 11/16	3'-7 11/16	4'-2 11/16	4'-8 11/16	5'-5 5/16	5'-5 7/8	5'-5 13/16
STRAIGHT GRADE	TOP OF SLAB TO ABUTMENT TOP AT ℄ ABUTMENT BEARING	"U"	3'-7 7/8	3'-7 7/8	4'-3 1/16	4'-9 1/8	5'-5 7/8	5'-6 5/8	5'-6 11/16
D.L. ABUTMENT REACTION (D.L. + F.W.S.)		KIPS	280.7	320.7	387.7	434.1	502.3	543.5	584.5
L.L. ABUTMENT REACTION (HS20-44) NO IMPACT		KIPS	115.2	119.6	124.1	127.2	129.1	130.6	131.8

LATEST REVISION DATE :

APPROVED BY

STANDARD DESIGN - 30' ROADWAY, SINGLE SPAN BRIDGE

PRETENSIONED PRESTRESSED CONCRETE BEAM BRIDGES

JANUARY, 2005 HS20-44 LOADING

IOWA DEPARTMENT OF TRANSPORTATION - HIGHWAY DIVISION

SUPERSTRUCTURE
0° SKEW

H30SI-07-05

REINFORCING BAR LIST

ONE SUPERSTRUCTURE AND TWO ABUTMENTS

BRIDGE LENGTH

BAR	LOCATION	SHAPE	46'-8 LXA NO.	46'-8 LXA LENGTH	46'-8 LXA WEIGHT	55'-0 LXA NO.	55'-0 LXA LENGTH	55'-0 LXA WEIGHT	67'-6 LXB NO.	67'-6 LXB LENGTH	67'-6 LXB WEIGHT	80'-0 LXC NO.	80'-0 LXC LENGTH	80'-0 LXC WEIGHT	90'-0 LXD NO.	90'-0 LXD LENGTH	90'-0 LXD WEIGHT	100'-0 LXD NO.	100'-0 LXD LENGTH	100'-0 LXD WEIGHT	110'-0 LXD NO.	110'-0 LXD LENGTH	110'-0 LXD WEIGHT
6a1	SLAB TRANSVERSE, TOP & BOTTOM		131	32'-10	6461	153	32'-10	7546	187	32'-10	9223	221	32'-10	10,899	247	32'-10	12,181	273	32'-10	13,464	301	32'-10	14,845
5b1	SLAB LONGITUDINAL TOP & BOTTOM		168	25'-9	4513	168	29'-10	5228	168	36'-1	6323	252	28'-11	7601	252	32'-3	8477	252	35'-7	9353	252	38'-11	10,229
5d2	ABUTMENT DIAPHRAGM, LONGITUDINAL - F.F		24	6'-2	155	24	5'-11	149	24	5'-11	149	24	5'-11	149	24	6'-1	153	24	6'-1	153	24	6'-1	153
5d3	ABUTMENT DIAPHRAGM, LONGITUDINAL - F.F		8	5'-3	44	8	5'-0	42	8	5'-0	42	8	5'-0	42	8	4'-10	41	8	4'-10	41	8	4'-10	41
5d5	ABUTMENT DIAPHRAGM, LONGITUDINAL - END		12	4'-7	58	12	4'-7	58	12	4'-7	58	12	4'-7	58	12	4'-7	58	12	4'-7	58	12	4'-7	58
5d6	ABUTMENT DIAPHRAGM LONGITUDINAL - B.F.		8	32'-9	274	8	32'-9	274	8	32'-9	274	8	32'-9	274	8	32'-9	274	8	32'-9	274	8	32'-9	274
5d7	PAVING NOTCH, LONGITUDINAL		4	28'-6	119	4	28'-6	119	4	28'-6	119	4	32'-8	137	4	32'-8	137	4	32'-8	137	4	32'-8	137
5d8	ABUTMENT DIAPH. WING EXT. LONGIT.		-	-	-	-	-	-	-	-	-	48	10'-6	526	48	10'-6	526	48	10'-6	526	48	10'-6	526
8f1	ABUTMENT FOOTING LONGITUDINAL - B.F.		8	32'-11	704	8	32'-11	704	8	32'-11	704	8	32'-11	704	8	32'-11	704	8	32'-11	704	8	32'-11	704
8f2	ABUTMENT FOOTING LONGITUDINAL - F.F.		10	32'-11	879	10	32'-11	879	10	32'-11	879	10	32'-11	879	10	32'-11	879	10	32'-11	879	10	32'-11	879
8f3	ABUTMENT EXTENSION LONGITUDINAL		-	-	-	-	-	-	-	-	-	16	10'-2	435	16	10'-2	435	16	10'-2	435	16	10'-2	435
8f4	ABUTMENT EXTENSION LONGITUDINAL		-	-	-	-	-	-	-	-	-	16	8'-8	371	16	8'-8	371	16	8'-8	371	16	8'-8	371
8g1	ABUTMENT VERTICAL - B.F.		62	6'-7	1090	62	6'-7	1090	62	7'-2	1187	58	7'-8	1188	58	8'-5	1304	58	8'-5	1304	58	8'-5	1304
8g2	ABUTMENT VERTICAL - F.F.		52	5'-6	764	52	5'-6	764	52	6'-1	845	52	6'-7	915	52	7'-4	1019	52	7'-4	1019	52	7'-4	1019
8g3	ABUTMENT DIAPHRAGM VERTICAL - B.F.		50	15'-3	2036	50	15'-3	2036	50	15'-3	2036	50	15'-9	2103	50	15'-9	2103	50	15'-9	2103	50	15'-9	2103
6g4	ABUT. DIAPH. WING EXT. VERT.		-	-	-	-	-	-	-	-	-	40	5'-8	341	40	6'-5	386	40	6'-5	386	40	6'-5	386
5j1	SLAB TRANSV. TOP AT RAIL		130	6'-3	848	152	6'-3	991	186	6'-3	1213	220	6'-3	1435	246	6'-3	1604	272	6'-3	1774	300	6'-3	1956
5h1	ABUT. WING HORIZONTAL		56	6'-8	390	56	6'-8	390	56	6'-8	390	56	6'-8	390	56	6'-8	390	56	6'-8	390	56	6'-8	390
5h2	ABUTMENT TO WING ANCHOR		56	4'-0	234	56	4'-0	234	56	4'-0	234	8	4'-0	34	8	4'-0	34	8	4'-0	34	8	4'-0	34
5k1	PAVING NOTCH, TRANSVERSE		54	4'-11	277	54	4'-11	277	54	4'-11	277	54	4'-11	277	54	4'-11	277	54	4'-11	277	54	4'-11	277
5k2	PAVING NOTCH, TRANSVERSE		54	3'-5	193	54	3'-5	193	54	3'-5	193	54	3'-5	193	54	3'-5	193	54	3'-5	193	54	3'-5	193
5p1	ABUTMENT HOOPS		108	10'-6	1183	108	10'-6	1183	104	10'-6	1139	120	10'-6	1315	104	10'-6	1139	116	10'-6	1271	116	10'-6	1271
5p2	ABUTMENT EXTENSIONS HOOPS		-	-	-	-	-	-	-	-	-	24	10'-8	268	24	10'-8	268	24	10'-8	268	24	10'-8	268
6p3	ABUT. BOTT. AT PILES		-	-	-	-	-	-	-	-	-	32	6'-8	321	36	6'-8	361	40	6'-8	401	40	6'-8	401
5r1	PAVING BLOCK LIFTING HOOPS		8	2'-10	24	8	2'-10	24	8	2'-10	24	8	2'-10	24	8	2'-10	24	8	2'-10	24	8	2'-10	24
5s1	WING, VERTICAL		56	VARIES	263	56	VARIES	263	56	VARIES	263	56	VARIES	263	56	VARIES	263	56	VARIES	263	56	VARIES	263
4t1	UNDER BEAMS AT ABUTMENTS		10	4'-8	32	10	4'-8	32	10	4'-8	32	10	4'-8	32	10	4'-10	33	10	4'-10	33	10	4'-10	33
#2	PILE SPIRAL - NO. 2 BAR		12	38'-6	77	12	38'-6	77	14	38'-6	90	20	38'-6	128	22	38'-6	141	24	38'-6	154	24	38'-6	154
	SPIRAL SPACER L $\frac{7}{8}\times\frac{7}{8}\times\frac{1}{8}\times$ 0.70		24	1'-10	32	24	1'-10	32	28	1'-10	37	40	1'-10	52	44	1'-10	58	48	1'-10	63	48	1'-10	63
	REINFORCING STEEL - (LBS.)				20,650			22,585			25,731			31,354			33,833			36,352			38,791
	SEE BARRIER RAIL DETAILS (LBS.)				3870			4226			4784			5809			6245			6682			7160
	SEE OPEN RAIL DETAILS (LBS.)				4215			4734			5444			7095			7691			8240			8752

BENT BAR DETAILS

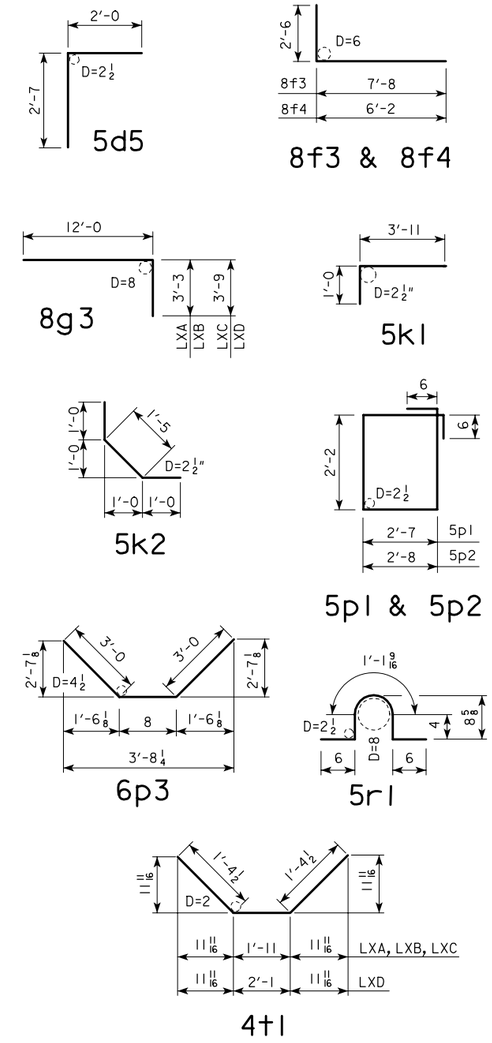

NOTE: ALL DIMENSIONS ARE OUT TO OUT. D= PIN DIAMETER

CONCRETE PLACEMENT QUANTITIES

(SUPERSTRUCTURE PLUS INTEGRAL ABUTMENTS)

			46'-8	55'-0	67'-6	80'-0	90'-0	100'-0	110'-0
SLAB, AND ABUT. DIAPHRAGM	WITH BARRIER RAIL	CU.YD.	66.6	73.3	87.4	106.9	122.1	130.8	139.4
	WITH OPEN RAIL	CU.YD.	68.1	75.0	89.5	109.4	124.8	133.9	142.8
PAVING BLOCKS		CU.YD.	1.5	1.5	1.5	1.5	1.5	1.5	1.5
ABUTMENT WINGS		CU.YD.	6.9	6.9	6.9	6.9	6.9	6.9	6.9
ABUTMENT FOOTINGS		CU.YD.	26.6	26.6	26.6	34.4	34.4	34.4	34.4

ESTIMATED QUANTITIES

(SUPERSTRUCTURE PLUS INTEGRAL ABUTMENTS)

			46'-8	55'-0	67'-6	80'-0	90'-0	100'-0	110'-0
NO. OF STEEL H-PILES FOR TWO ABUTMENTS (HP10X42)		NO.	12	12	14	20	22	24	24
STRUCTURAL CONCRETE, (BRIDGE)	WITH BARRIER RAIL	CU.YD.	101.6	108.3	122.4	149.7	164.9	173.6	182.2
	WITH OPEN RAIL	CU.YD.	103.1	110.0	124.5	152.2	167.6	176.7	185.6
CONCRETE RAIL (BARRIER OR OPEN)		L.F.	127.3	144.0	169.0	214.0	234.0	254.0	274.0
REINFORCING STEEL	WITH BARRIER RAIL	LBS.	24,520	26,811	30,515	37,163	40,078	43,034	45,951
	WITH OPEN RAIL	LBS.	24,865	27,319	31,175	38,449	41,524	44,592	47,543
STRUCTURAL STEEL	WITH BARRIER RAIL	LBS.	1480	1471	1515	1555	1642	1642	1642
	WITH OPEN RAIL	LBS.	1190	1180	1180	1180	1212	1212	1212

LATEST REVISION DATE :

APPROVED BY

STANDARD DESIGN - 30' ROADWAY, SINGLE SPAN BRIDGE

PRETENSIONED PRESTRESSED CONCRETE BEAM BRIDGES

JANUARY, 2005 HS20-44 LOADING

IOWA DEPARTMENT OF TRANSPORTATION - HIGHWAY DIVISION

DECK & ABUTMENT REINF. H30S1-08-05

EPOXY COATED REINFORCING BAR LIST

ONE SUPERSTRUCTURE AND TWO ABUTMENTS

BRIDGE LENGTH

BAR	LOCATION	SHAPE	46'-8 LXA NO.	46'-8 LXA LENGTH	46'-8 LXA WEIGHT	55'-0 LXA NO.	55'-0 LXA LENGTH	55'-0 LXA WEIGHT	67'-6 LXB NO.	67'-6 LXB LENGTH	67'-6 LXB WEIGHT	80'-0 LXC NO.	80'-0 LXC LENGTH	80'-0 LXC WEIGHT	90'-0 LXD NO.	90'-0 LXD LENGTH	90'-0 LXD WEIGHT	100'-0 LXD NO.	100'-0 LXD LENGTH	100'-0 LXD WEIGHT	110'-0 LXD NO.	110'-0 LXD LENGTH	110'-0 LXD WEIGHT
6a1	SLAB TRANSVERSE, TOP & BOTTOM		131	32'-10	6461	153	32'-10	7546	187	32'-10	9223	221	32'-10	10899	247	32'-10	12181	273	32'-10	13,464	301	32'-10	14,845
5b1	SLAB LONGITUDINAL TOP & BOTTOM		168	25'-9	4513	168	29'-10	5228	168	36'-1	6323	252	28'-11	7601	252	32'-3	8477	252	35'-7	9353	252	38'-11	10229
5d6	ABUTMENT DIAPHRAGM LONGITUDINAL - B.F.		8	32'-9	274	8	32'-9	274	8	32'-9	274	8	32'-9	274	8	32'-9	274	8	32'-9	274	8	32'-9	274
5d7	PAVING NOTCH, LONGITUDINAL		4	28'-6	119	4	28'-6	119	4	28'-6	119	4	32'-8	137	4	32'-8	137	4	32'-8	137	4	32'-8	137
8f1	ABUTMENT FOOTING LONGITUDINAL - B.F.		8	32'-11	704	8	32'-11	704	8	32'-11	704	8	32'-11	704	8	32'-11	704	8	32'-11	704	8	32'-11	704
8g1	ABUTMENT VERTICAL - B.F.		62	6'-7	1090	62	6'-7	1090	62	7'-2	1187	58	7'-8	1188	58	8'-5	1304	58	8'-5	1304	58	8'-5	1304
8g3	ABUTMENT DIAPHRAGM VERTICAL - B.F.		50	15'-3	2036	50	15'-3	2036	50	15'-3	2036	50	15'-9	2103	50	15'-9	2103	50	15'-9	2103	50	15'-9	2103
5j1	SLAB TRANSV. TOP AT RAIL		130	6'-3	848	152	6'-3	991	186	6'-3	1213	220	6'-3	1435	246	6'-3	1604	272	6'-3	1774	300	6'-3	1956
5k1	PAVING NOTCH, TRANSVERSE		54	4'-11	277	54	4'-11	277	54	4'-11	277	54	4'-11	277	54	4'-11	277	54	4'-11	277	54	4'-11	277
5k2	PAVING NOTCH, TRANSVERSE		54	3'-5	193	54	3'-5	193	54	3'-5	193	54	3'-5	193	54	3'-5	193	54	3'-5	193	54	3'-5	193
5p1	ABUTMENT HOOPS		108	10'-6	1183	108	10'-6	1183	104	10'-6	1139	120	10'-6	1315	104	10'-6	1139	116	10'-6	1271	116	10'-6	1271
6p3	ABUT. BOTT. AT PILES		-	-	-	-	-	-	-	-	-	32	6'-8	321	36	6'-8	361	40	6'-8	401	40	6'-8	401
	REINFORCING STEEL - EPOXY COATED (LBS.)				17,698			19,641			22,688			26,447			28,754			31,255			33,694
	SEE BARRIER RAIL DETAILS (LBS.)				3870			4226			4784			5809			6245			6682			7160
	SEE OPEN RAIL DETAILS (LBS.)				4215			4734			5444			7095			7691			8240			8752

NON-EPOXY COATED REINFORCING BAR LIST

ONE SUPERSTRUCTURE AND TWO ABUTMENTS

BRIDGE LENGTH

BAR	LOCATION	SHAPE	46'-8 LXA NO.	46'-8 LXA LENGTH	46'-8 LXA WEIGHT	55'-0 LXA NO.	55'-0 LXA LENGTH	55'-0 LXA WEIGHT	67'-6 LXB NO.	67'-6 LXB LENGTH	67'-6 LXB WEIGHT	80'-0 LXC NO.	80'-0 LXC LENGTH	80'-0 LXC WEIGHT	90'-0 LXD NO.	90'-0 LXD LENGTH	90'-0 LXD WEIGHT	100'-0 LXD NO.	100'-0 LXD LENGTH	100'-0 LXD WEIGHT	110'-0 LXD NO.	110'-0 LXD LENGTH	110'-0 LXD WEIGHT
5d2	ABUTMENT DIAPHRAGM, LONGITUDINAL - F.F.		24	6'-2	155	24	5'-11	149	24	5'-11	149	24	5'-11	149	24	6'-1	153	24	6'-1	153	24	6'-1	153
5d3	ABUTMENT DIAPHRAGM, LONGITUDINAL - F.F.		8	5'-3	44	8	5'-0	42	8	5'-0	42	8	5'-0	42	8	4'-10	41	8	4'-10	41	8	4'-10	41
5d5	ABUTMENT DIAPHRAGM, LONGITUDINAL - END		12	4'-7	58	12	4'-7	58	12	4'-7	58	12	4'-7	58	12	4'-7	58	12	4'-7	58	12	4'-7	58
5d8	ABUTMENT DIAPH. WING EXT. LONGIT.		-	-	-	-	-	-	-	-	-	48	10'-6	526	48	10'-6	526	48	10'-6	526	48	10'-6	526
8f2	ABUTMENT FOOTING LONGITUDINAL - F.F.		10	32'-11	879	10	32'-11	879	10	32'-11	879	10	32'-11	879	10	32'-11	879	10	32'-11	879	10	32'-11	879
8f3	ABUTMENT EXTENSION LONGITUDINAL		-	-	-	-	-	-	-	-	-	16	10'-2	435	16	10'-2	435	16	10'-2	435	16	10'-2	435
8f4	ABUTMENT EXTENSION LONGITUDINAL		-	-	-	-	-	-	-	-	-	16	8'-8	371	16	8'-8	371	16	8'-8	371	16	8'-8	371
8g2	ABUTMENT VERTICAL - F.F.		52	5'-6	764	52	5'-6	764	52	6'-1	845	52	6'-7	915	52	7'-4	1019	52	7'-4	1019	52	7'-4	1019
6g4	ABUT. DIAPH. WING EXT. VERT.		-	-	-	-	-	-	-	-	-	40	5'-8	341	40	6'-5	386	40	6'-5	386	40	6'-5	386
5h1	ABUT. WING HORIZONTAL		56	6'-8	390	56	6'-8	390	56	6'-8	390	56	6'-8	390	56	6'-8	390	56	6'-8	390	56	6'-8	390
5h2	ABUTMENT TO WING ANCHOR		56	4'-0	234	56	4'-0	234	56	4'-0	234	8	4'-0	34	8	4'-0	34	8	4'-0	34	8	4'-0	34
5p2	ABUT. EXTENSION HOOPS		-	-	-	-	-	-	-	-	-	24	10'-8	268	24	10'-8	268	24	10'-8	268	24	10'-8	268
5r1	PAVING BLOCK LIFTING HOOPS		8	2'-10	24	8	2'-10	24	8	2'-10	24	8	2'-10	24	8	2'-10	24	8	2'-10	24	8	2'-10	24
5s1	WING, VERTICAL		56	VARIES	263	56	VARIES	263	56	VARIES	263	56	VARIES	263	56	VARIES	263	56	VARIES	263	56	VARIES	263
4t1	UNDER BEAMS AT ABUTMENTS		10	4'-8	32	10	4'-8	32	10	4'-8	32	10	4'-8	32	10	4'-10	33	10	4'-10	33	10	4'-10	33
#2	PILE SPIRAL - NO. 2 BAR		12	38'-6	77	12	38'-6	77	14	38'-6	90	20	38'-6	128	22	38'-6	141	24	38'-6	154	24	38'-6	154
	SPIRAL SPACER L $\frac{7}{8}\times\frac{7}{8}\times\frac{1}{8}\times$ 0.70		24	1'-10	32	24	1'-10	32	28	1'-10	37	40	1'-10	52	44	1'-10	58	48	1'-10	63	48	1'-10	63
	REINFORCING STEEL - NON-EPOXY COATED (LBS.)				2952			2944			3043			4907			5079			5097			5097

BENT BAR DETAILS

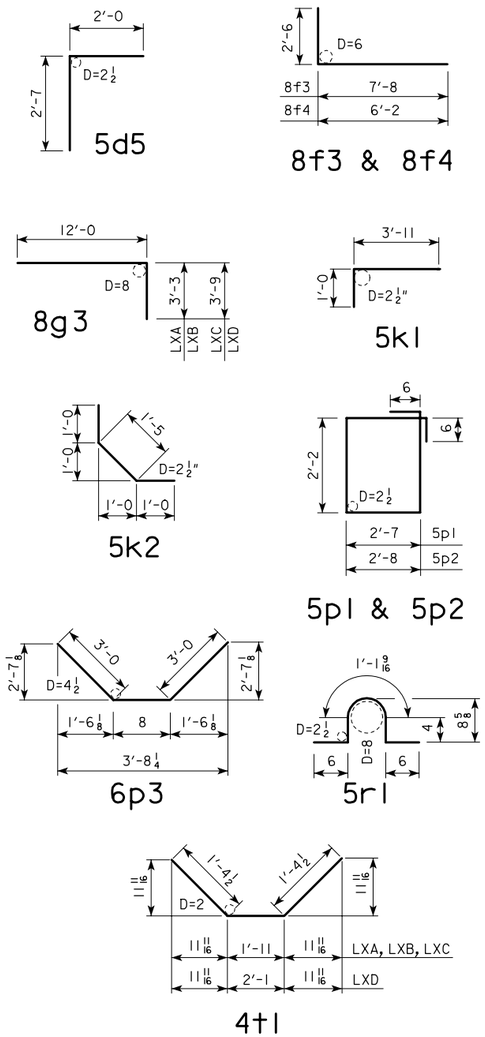

NOTE: ALL DIMENSIONS ARE OUT TO OUT. D= PIN DIAMETER

CONCRETE PLACEMENT QUANTITIES

(SUPERSTRUCTURE PLUS INTEGRAL ABUTMENTS)

			46'-8	55'-0	67'-6	80'-0	90'-0	100'-0	110'-0
SLAB, AND ABUT. DIAPHRAGM	WITH BARRIER RAIL	CU.YD.	66.6	73.3	87.4	106.9	122.1	130.8	139.4
	WITH OPEN RAIL	CU.YD.	68.1	75.0	89.5	109.4	124.8	133.9	142.8
PAVING BLOCKS		CU.YD.	1.5	1.5	1.5	1.5	1.5	1.5	1.5
ABUTMENT WINGS		CU.YD.	6.9	6.9	6.9	6.9	6.9	6.9	6.9
ABUTMENT FOOTINGS		CU.YD.	26.6	26.6	26.6	34.4	34.4	34.4	34.4

ESTIMATED QUANTITIES

(SUPERSTRUCTURE PLUS INTEGRAL ABUTMENTS)

			46'-8	55'-0	67'-6	80'-0	90'-0	100'-0	110'-0
NO. OF STEEL H-PILES FOR TWO ABUTMENTS (HP10X42)		NO.	12	12	14	20	22	24	24
STRUCTURAL CONCRETE, (BRIDGE)	WITH BARRIER RAIL	CU.YD.	101.6	108.3	122.4	149.7	164.9	173.6	182.2
	WITH OPEN RAIL	CU.YD.	103.1	110.0	124.5	152.2	167.6	176.7	185.6
CONCRETE RAIL (BARRIER OR OPEN)		L.F.	127.3	144.0	169.0	214.0	234.0	254.0	274.0
REINFORCING STEEL EPOXY COATED	WITH BARRIER RAIL	LBS.	21,568	23,867	27,472	32,256	34,999	37,937	40,854
	WITH OPEN RAIL	LBS.	21,913	24,375	28,132	33,542	36,445	39,495	42,446
REINFORCING STEEL		LBS.	2952	2944	3043	4907	5079	5097	5097
STRUCTURAL STEEL	WITH BARRIER RAIL	LBS.	1480	1471	1515	1555	1642	1642	1642
	WITH OPEN RAIL	LBS.	1190	1180	1180	1180	1212	1212	1212

LATEST REVISION DATE :

APPROVED BY

STANDARD DESIGN - 30' ROADWAY, SINGLE SPAN BRIDGE

PRETENSIONED PRESTRESSED CONCRETE BEAM BRIDGES

JANUARY, 2005 HS20-44 LOADING

IOWA DEPARTMENT OF TRANSPORTATION - HIGHWAY DIVISION

DECK & ABUTMENT REINF.
15° SKEW

H30S1-09-05
EPOXY

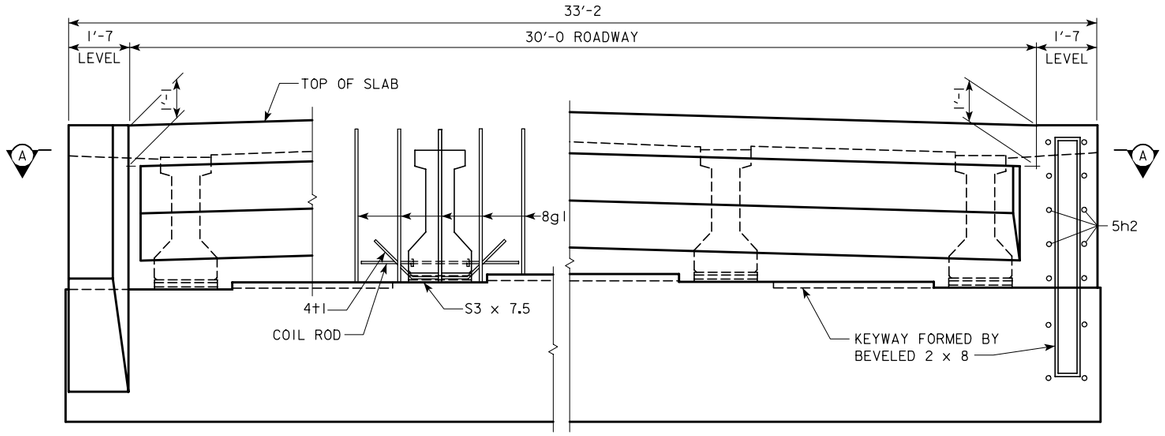

PART REAR ELEVATION AT ABUTMENT

NOTE: BARRIER RAIL NOT SHOWN.
(SHOWN FOR SOLID BARRIER RAIL)

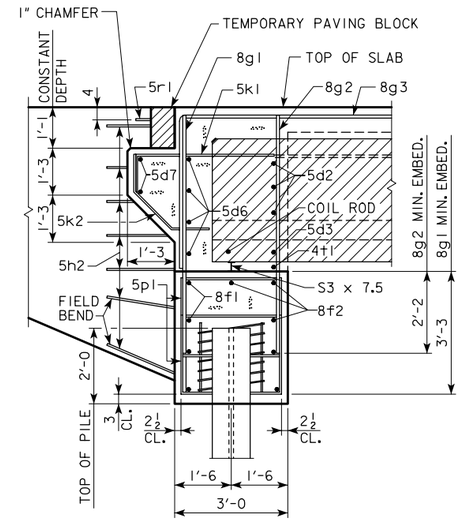

PART SECTION B-B

NOTE:
THE SPIRAL AT THE TOP OF EACH PILE TO BE 7 TURNS OF No. 2 BAR, 21" DIAMETER, 3" PITCH WITH 2 - L $\frac{7}{8} \times \frac{7}{8} \times \frac{1}{8}$ SPACERS PUNCHED TO HOLD SPIRAL.

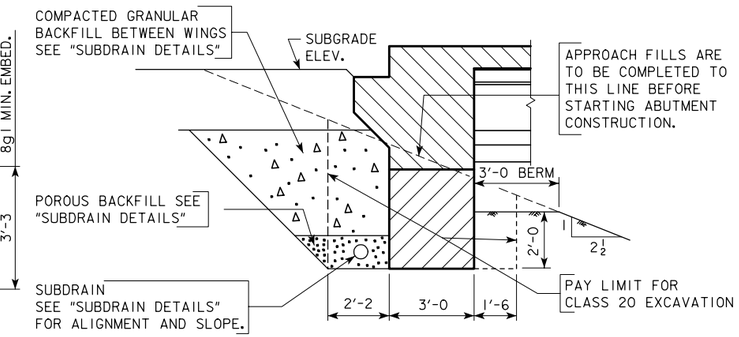

ABUTMENT EXCAVATION DETAILS

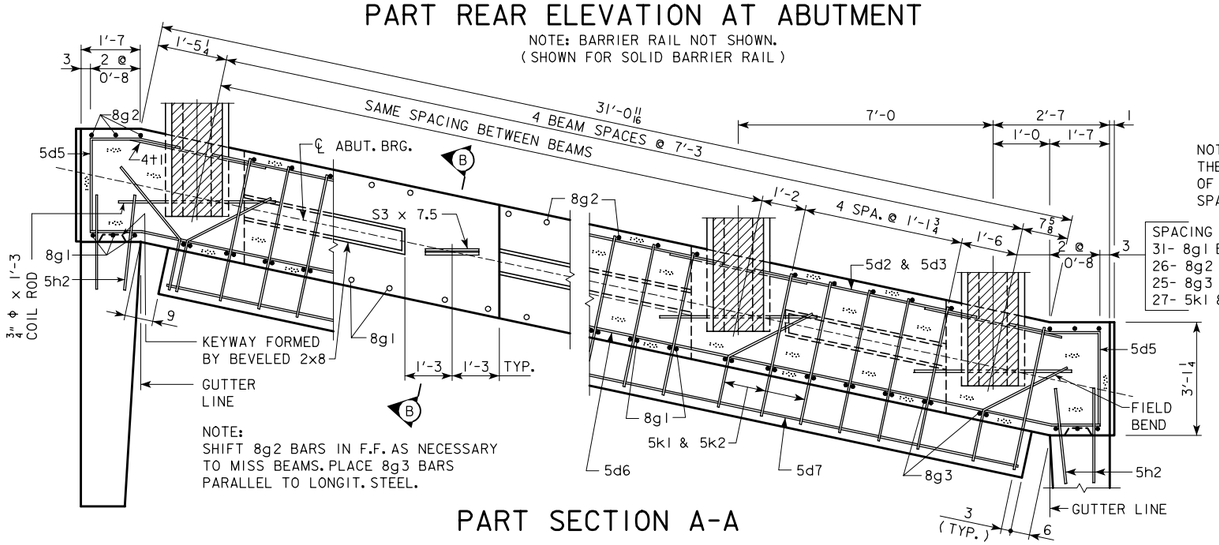

SPACING FOR:
31- 8g1 BACK FACE
26- 8g2 FRONT FACE
25- 8g3 BACK FACE
27- 5k1 & 5k2 BACK FACE

NOTE:
SHIFT 8g2 BARS IN F.F. AS NECESSARY TO MISS BEAMS. PLACE 8g3 BARS PARALLEL TO LONGIT. STEEL.

PART SECTION A-A

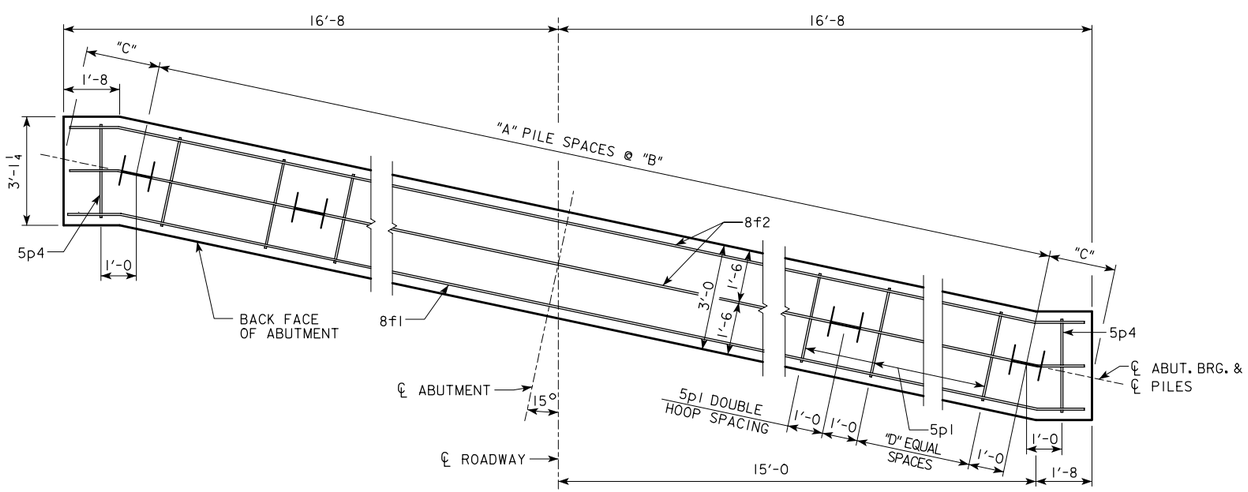

ABUTMENT PILE PLAN

ABUTMENT PILE SPACING

DIMENSION OR NO.	℄ TO ℄ ABUTMENT BEARING		
	46'-8	55'-0	67'-6
"A" PILE SPACES	5	6	6
"B" (FT. - IN.)	6'-2	5'-2	5'-2
"C" (FT. - IN.)	1'-10 1/16	1'-9 1/16	1'-9 1/16
"D" EQUAL SPACES	5	4	4
NO. OF PILES PER ABUT.	6	7	7
DESIGN PILE LOAD (TONS)	34	32	37

ABUTMENT NOTES:

MINIMUM CLEAR DISTANCE FROM FACE OF CONCRETE TO NEAR REINFORCING BAR IS TO BE 2" UNLESS OTHERWISE NOTED OR SHOWN.

LATEST REVISION DATE :

APPROVED BY

STANDARD DESIGN - 30' ROADWAY, SINGLE SPAN BRIDGE

PRETENSIONED PRESTRESSED CONCRETE BEAM BRIDGES

JANUARY, 2005 HS20-44 LOADING

IOWA DEPARTMENT OF TRANSPORTATION - HIGHWAY DIVISION

ABUTMENT DETAILS

15° SKEW A & B BEAMS

H30SI-10-05

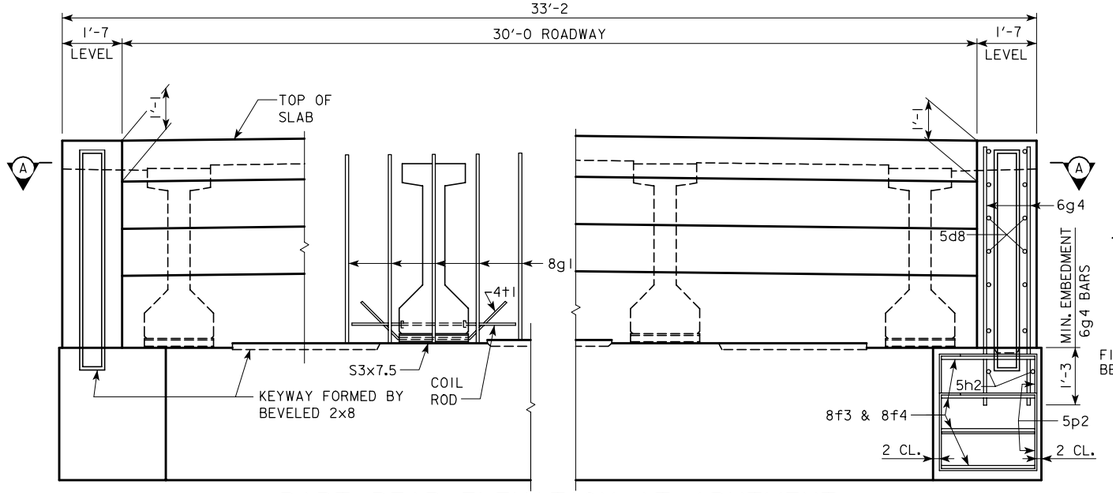

PART REAR ELEVATION AT ABUTMENT

NOTE: BARRIER RAIL AND WINGS NOT SHOWN.
(SHOWN FOR SOLID BARRIER RAIL)

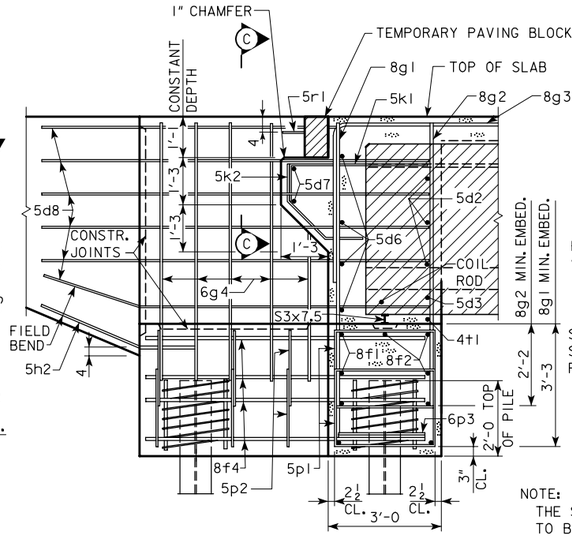

PART SECTION B - B

NOTE:
THE SPIRAL AT THE TOP OF EACH PILE TO BE 7 TURNS OF No. 2 BAR, 21" DIAMETER, 3" PITCH WITH 2 - $L\frac{7}{8} \times \frac{7}{8} \times \frac{1}{8}$ SPACERS PUNCHED TO HOLD SPIRAL.

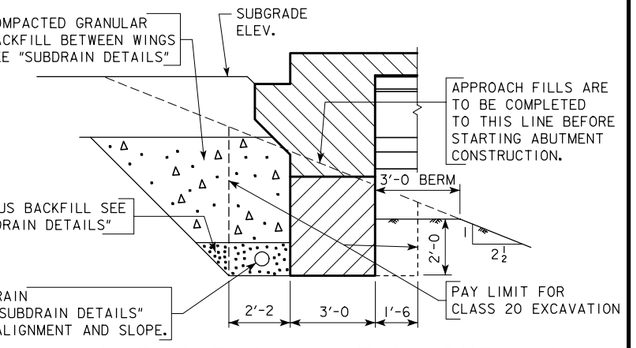

ABUTMENT EXCAVATION DETAILS

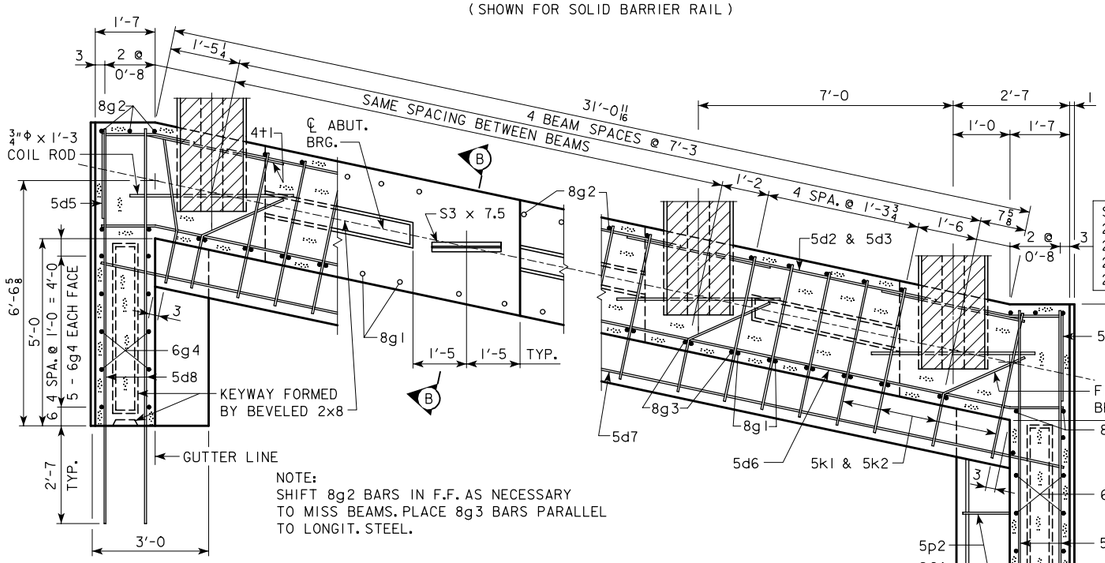

SPACING FOR:
29- 8g1 BACK FACE
26- 8g2 FRONT FACE
25- 8g3 BACK FACE
27- 5k1 & 5k2 BACK FACE

NOTE:
SHIFT 8g2 BARS IN F.F. AS NECESSARY TO MISS BEAMS. PLACE 8g3 BARS PARALLEL TO LONGIT. STEEL.

PART SECTION A-A

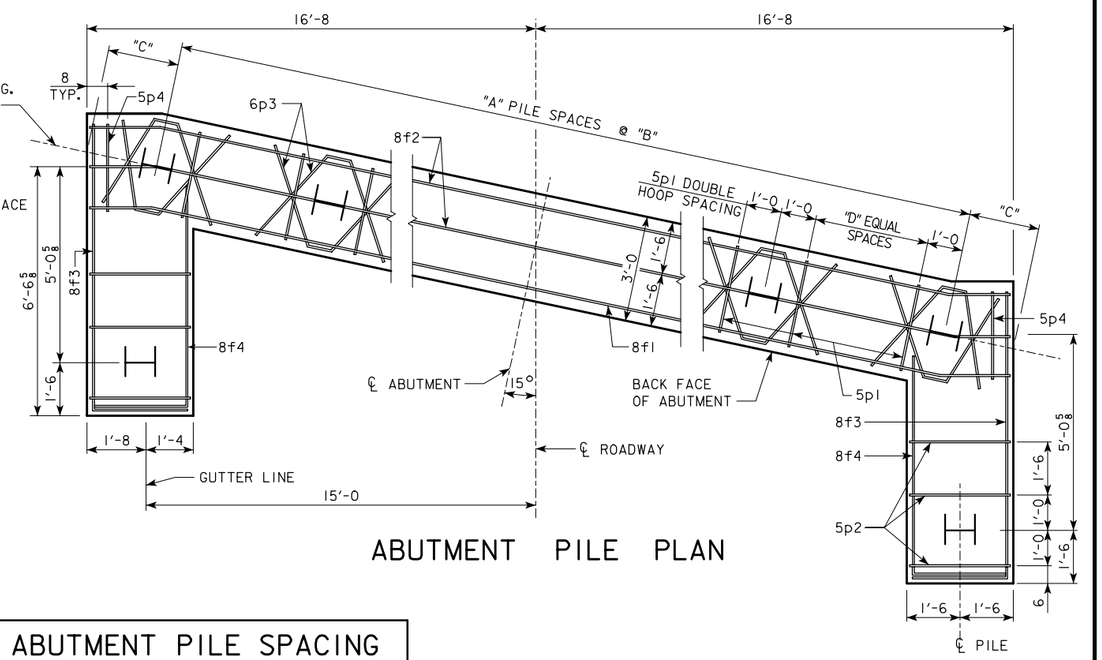

ABUTMENT PILE PLAN

ABUTMENT NOTES:

MINIMUM CLEAR DISTANCE FROM FACE OF CONCRETE TO NEAR REINFORCING BAR IS TO BE 2" UNLESS OTHERWISE NOTED OR SHOWN.

* NOTE: SEE BARRIER RAIL SHEET FOR DETAILS. REINFORCING BARS 5c3 AND 5c14 ARE INCLUDED IN SUPERSTRUCTURE QUANTITIES.

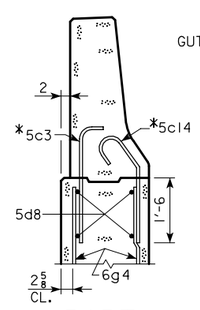

PART SECTION C-C

ABUTMENT PILE SPACING

DIMENSION OR NO.	℄ TO ℄ ABUTMENT BEARING			
	80'-0	90'-0	100'-0	110'-0
"A" PILE SPACES	7	8	9	9
"B" (FT - IN)	4'-5	3'-10	3'-5	3'-5
"C" (FT - IN)	1'-9 9/16	1'-11 1/16	1'-10 9/16	1'-10 9/16
"D" EQUAL SPACES	3	2	2	2
NO. OF PILES PER ABUT.	10	11	12	12
DESIGN PILE LOAD (TONS)	36	36	34	37

LATEST REVISION DATE :

APPROVED BY

STANDARD DESIGN - 30' ROADWAY, SINGLE SPAN BRIDGE

PRETENSIONED PRESTRESSED CONCRETE BEAM BRIDGES

JANUARY, 2005 HS20-44 LOADING

IOWA DEPARTMENT OF TRANSPORTATION - HIGHWAY DIVISION

ABUTMENT DETAILS

15° SKEW C & D BEAMS

H30SI-11-05

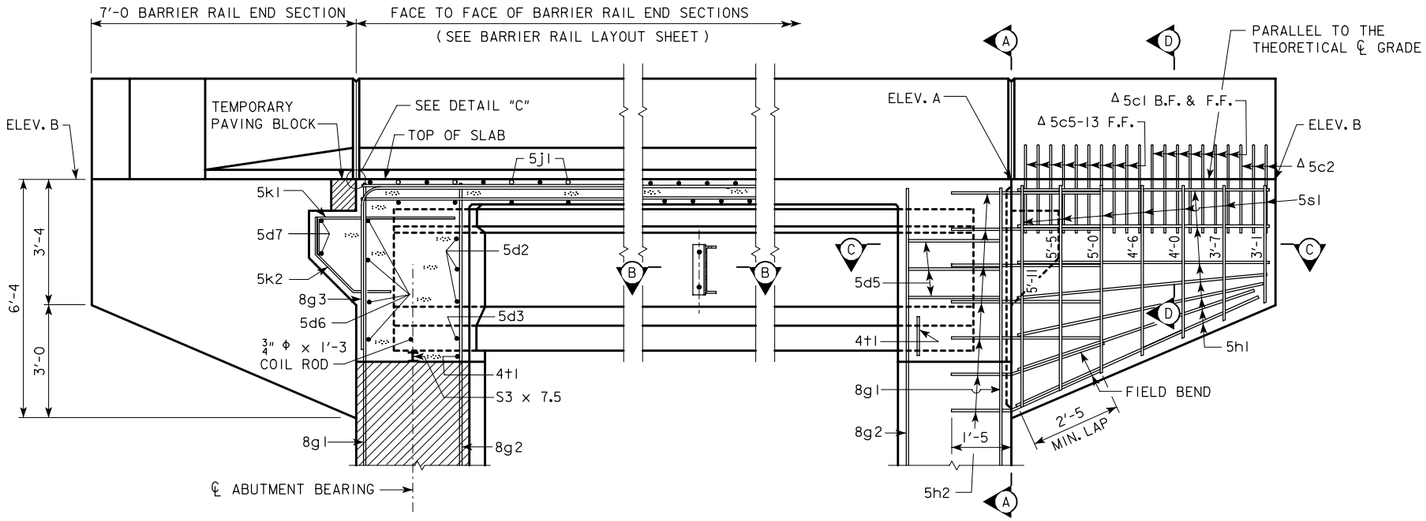

PART LONGITUDINAL SECTION NEAR GUTTER

(FOR DETAILS OF INTERMEDIATE DIAPHRAGM SEE SHEET H30SI-33)

PART END VIEW AT ABUTMENT

PROVIDE ELEVATIONS A AND B IN THE BRIDGE PLAN SHEETS.

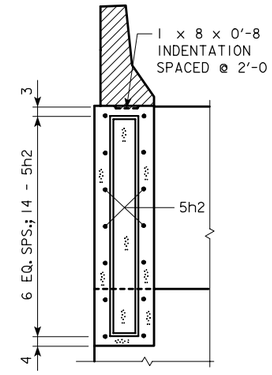

SECTION A-A

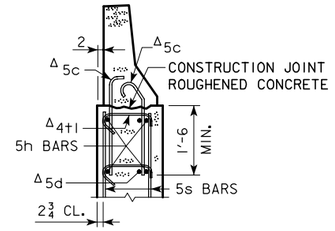

SECTION D-D

Δ NOTE:
SEE END SECTION DETAILS IN THESE PLANS FOR DETAILS OF BARRIER RAIL END SECTION AND SPACING FOR 5c BARRIER RAIL BARS. REINFORCING BARS "5c", "5d" AND "4t1" ARE INCLUDED IN THE SUPERSTRUCTURE QUANTITIES.

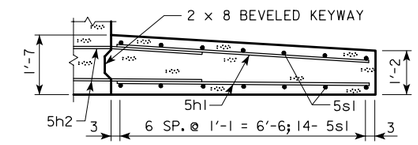

PART SECTION C-C

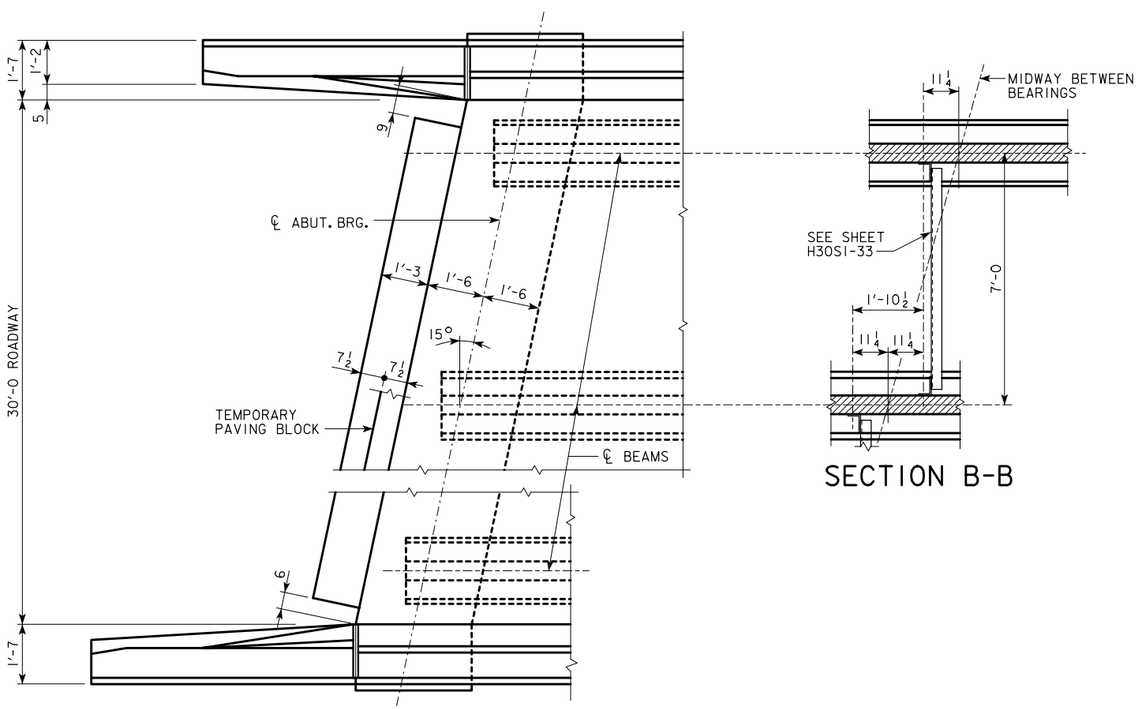

PART PLAN

SECTION B-B

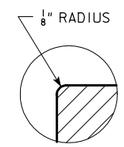

DETAIL "C"

(TEMPORARY PAVING BLOCK NOT SHOWN)

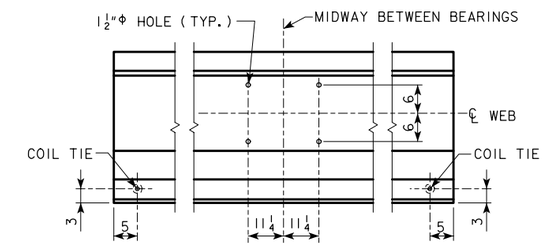

LOCATION OF BEAM COIL TIES AND STEEL DIAPHRAGM BOLT HOLES

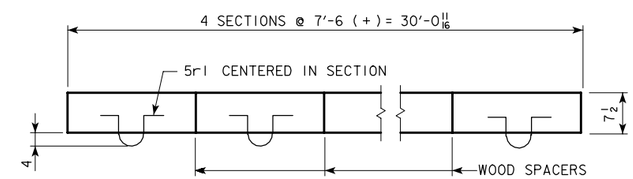

PLAN OF TEMPORARY PAVING BLOCK

NOTE: LINE PAVING NOTCH WITH TARPAPER BEFORE PLACING THE TEMPORARY PAVING BLOCK.

LATEST REVISION DATE :

APPROVED BY

STANDARD DESIGN - 30' ROADWAY, SINGLE SPAN BRIDGE

PRETENSIONED PRESTRESSED CONCRETE BEAM BRIDGES

JANUARY, 2005 HS20-44 LOADING

IOWA DEPARTMENT OF TRANSPORTATION - HIGHWAY DIVISION

LONGITUDINAL SECTION

15° SKEW A & B BEAMS

H30SI-12-05

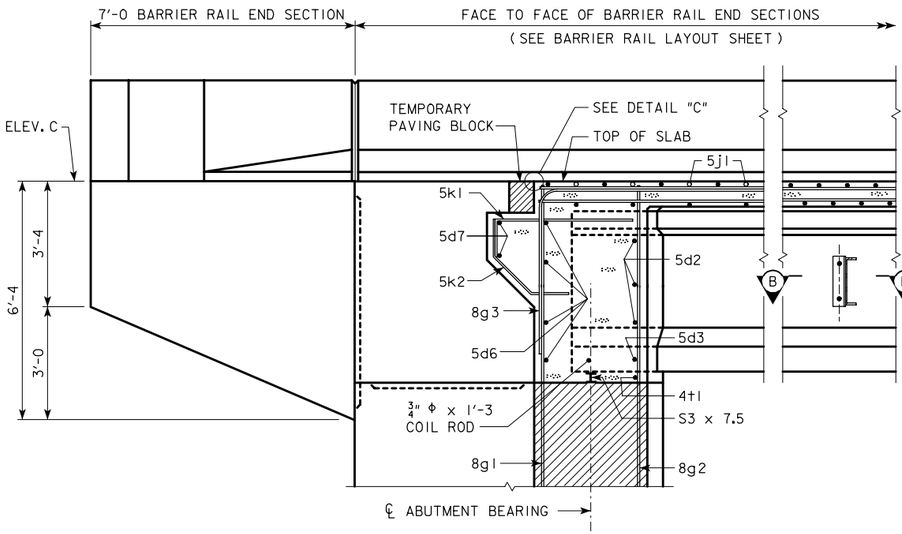

PART LONGITUDINAL SECTION NEAR GUTTER

(FOR DETAILS OF INTERMEDIATE DIAPHRAGM SEE SHEET H30SI-33)

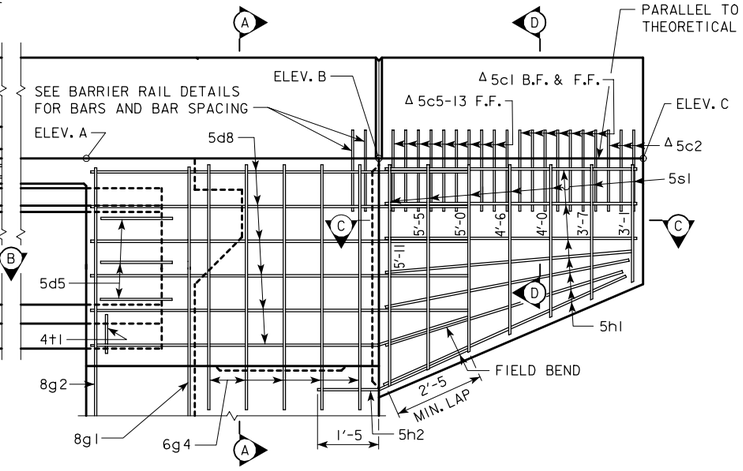

PART END VIEW AT ABUTMENT

PROVIDE ELEVATIONS A, B, AND C IN THE BRIDGE PLAN SHEETS.

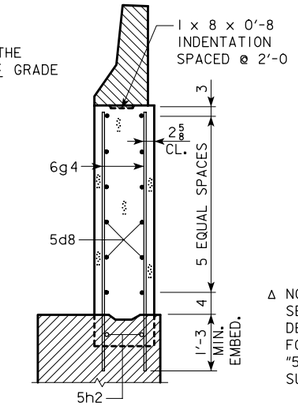

SECTION A-A

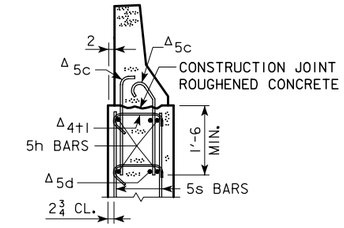

SECTION D-D

Δ NOTE:
SEE END SECTION DETAILS IN THESE PLANS FOR DETAILS OF BARRIER RAIL END SECTION AND SPACING FOR 5c BARRIER RAIL BARS. REINFORCING BARS "5c", "5d" AND "4t1" ARE INCLUDED IN THE SUPERSTRUCTURE QUANTITIES.

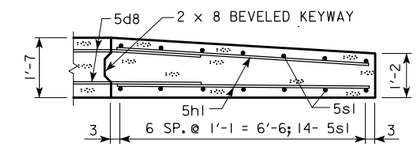

PART SECTION C-C

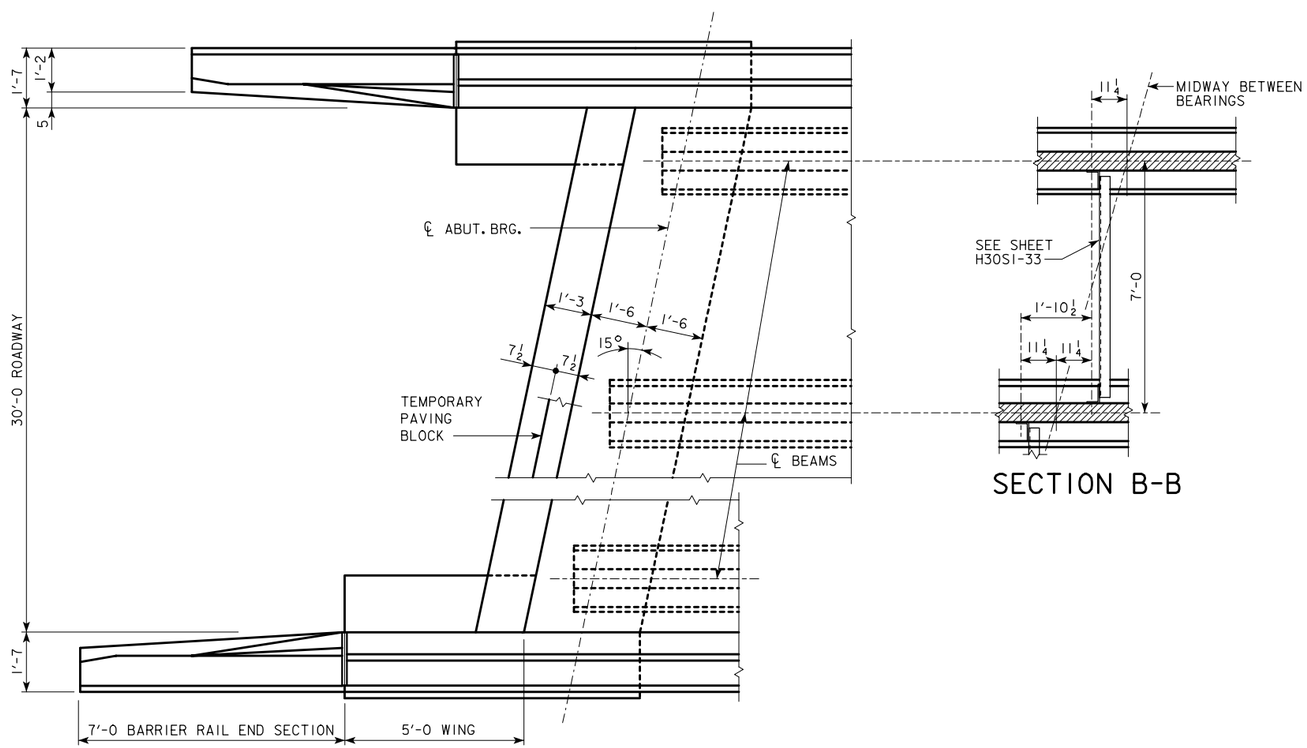

PART PLAN

SECTION B-B

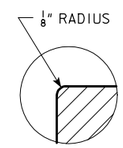

DETAIL "C"

(TEMPORARY PAVING BLOCK NOT SHOWN)

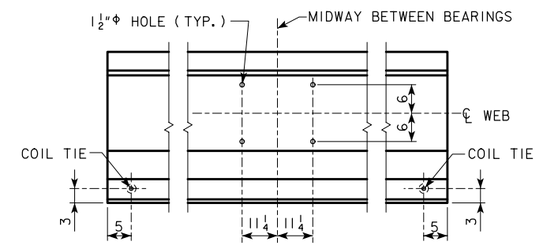

LOCATION OF BEAM COIL TIES AND STEEL DIAPHRAGM BOLT HOLES

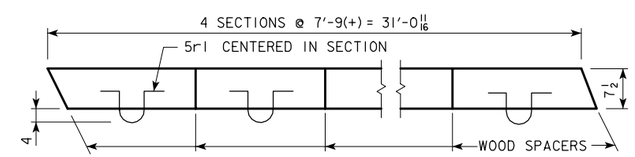

PLAN OF TEMPORARY PAVING BLOCK

NOTE: LINE PAVING NOTCH WITH TAR PAPER BEFORE PLACING THE TEMPORARY PAVING BLOCK.

LATEST REVISION DATE :

APPROVED BY

STANDARD DESIGN - 30' ROADWAY, SINGLE SPAN BRIDGE

PRETENSIONED PRESTRESSED CONCRETE BEAM BRIDGES

JANUARY, 2005 — HS20-44 LOADING

IOWA DEPARTMENT OF TRANSPORTATION - HIGHWAY DIVISION

LONGITUDINAL SECTION

15° SKEW C & D BEAMS

H30SI-13-05

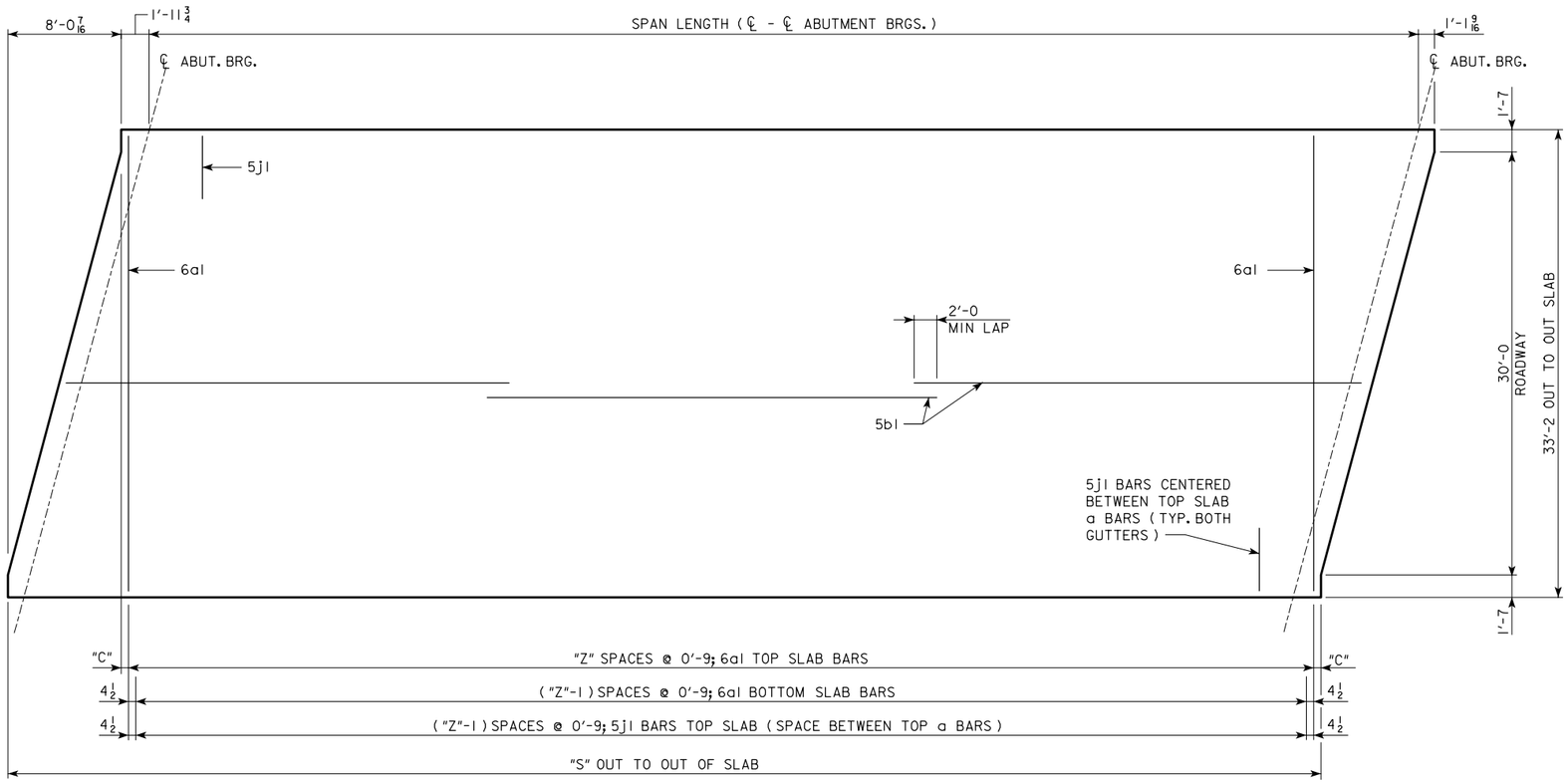

SLAB LAYOUT

(LEFT AHEAD SKEW SHOWN, RIGHT AHEAD SKEW SIMILAR)

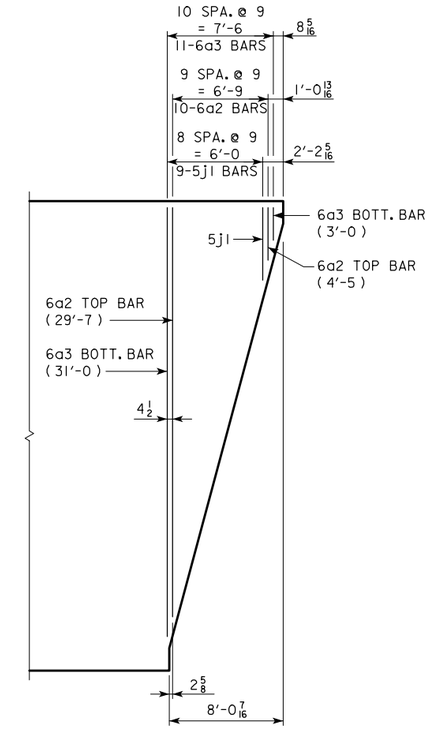

END OF SLAB REINFORCING

(TYPICAL EACH END OF DECK)

SPAN LENGTH (℄ - ℄ ABUTMENT BRGS.)			46'-8	55'-0	67'-6	80'-0	90'-0	100'-0	110'-0
LOCATION OF EXTREME 6a1 TOP BAR FROM END OF SLAB		"C"	2 7/8	3 3/8	6 3/8	4 7/8	6 3/8	3 3/8	4 7/8
NO. OF SPACES FOR 6a1 TOP BARS		"Z"	55	66	82	99	112	126	139
OUT TO OUT OF SLAB		"S"	49'-9 1/4	58'-1 1/4	70'-7 1/4	83'-1 1/4	93'-1 1/4	103'-1 1/4	113'-1 1/4
VERTICAL CURVE	TOP OF SLAB TO ABUTMENT TOP AT ℄ ABUTMENT BEARING	"U"	3'-7 11/16	3'-7 11/16	4'-2 11/16	4'-8 11/16	5'-5 5/16	5'-5 7/8	5'-5 13/16
STRAIGHT GRADE	TOP OF SLAB TO ABUTMENT TOP AT ℄ ABUTMENT BEARING	"U"	3'-7 7/8	3'-7 7/8	4'-3 1/16	4'-9 1/8	5'-5 7/8	5'-6 5/8	5'-6 11/16
D.L. ABUTMENT REACTION (D.L. + F.W.S.)		KIPS	284.7	324.7	391.9	438.6	507.2	548.4	589.4
L.L. ABUTMENT REACTION (HS20-44) NO IMPACT		KIPS	115.2	119.6	124.2	127.2	129.0	130.6	131.8

LATEST REVISION DATE :

APPROVED BY

STANDARD DESIGN - 30' ROADWAY, SINGLE SPAN BRIDGE

PRETENSIONED PRESTRESSED CONCRETE BEAM BRIDGES

JANUARY, 2005

HS20-44 LOADING

IOWA DEPARTMENT OF TRANSPORTATION - HIGHWAY DIVISION

SUPERSTRUCTURE

15° SKEW

H30S1-14-05

REINFORCING BAR LIST

ONE SUPERSTRUCTURE AND TWO ABUTMENTS

BRIDGE LENGTH

BAR	LOCATION	SHAPE	46'-8 LXA NO.	46'-8 LXA LENGTH	46'-8 LXA WEIGHT	55'-0 LXA NO.	55'-0 LXA LENGTH	55'-0 LXA WEIGHT	67'-6 LXB NO.	67'-6 LXB LENGTH	67'-6 LXB WEIGHT	80'-0 LXC NO.	80'-0 LXC LENGTH	80'-0 LXC WEIGHT	90'-0 LXD NO.	90'-0 LXD LENGTH	90'-0 LXD WEIGHT	100'-0 LXD NO.	100'-0 LXD LENGTH	100'-0 LXD WEIGHT	110'-0 LXD NO.	110'-0 LXD LENGTH	110'-0 LXD WEIGHT
6a1	SLAB TRANSVERSE, TOP & BOTTOM		111	32'-10	5475	133	32'-10	6559	165	32'-10	8138	199	32'-10	9814	225	32'-10	11,097	253	32'-10	12,477	279	32'-10	13,760
6a2	SLAB TRANSVERSE END, TOP		20	*	511	20	*	511	20	*	511	20	*	511	20	*	511	20	*	511	20	*	511
6a3	SLAB TRANSVERSE END, BOTTOM		22	**	562	22	**	562	22	**	562	22	**	562	22	**	562	22	**	562	22	**	562
5b1	SLAB LONGITUDINAL TOP & BOTTOM		168	25'-10	4527	168	29'-11	5243	168	36'-2	6338	252	29'-0	7623	252	32'-4	8499	252	35'-8	9375	252	39'-0	10,251
5d2	ABUTMENT DIAPHRAGM, LONGITUDINAL - F.F.		24	6'-4	159	24	6'-1	153	24	6'-1	153	24	6'-1	153	24	6'-3	157	24	6'-3	157	24	6'-3	157
5d3	ABUTMENT DIAPHRAGM, LONGITUDINAL - F.F.		8	5'-5	46	8	5'-2	44	8	5'-2	44	8	5'-2	44	8	5'-0	42	8	5'-0	42	8	5'-0	42
5d5	ABUTMENT DIAPHRAGM, LONGITUDINAL - END		12	4'-7	58	12	4'-7	58	12	4'-7	58	12	4'-7	58	12	4'-7	58	12	4'-7	58	12	4'-7	58
5d6	ABUTMENT DIAPHRAGM LONGITUDINAL - B.F.		8	33'-10	283	8	33'-10	283	8	33'-10	283	8	33'-10	283	8	33'-10	283	8	33'-10	283	8	33'-10	283
5d7	PAVING NOTCH, LONGITUDINAL		4	29'-7	124	4	29'-7	124	4	29'-7	124	4	33'-11	142	4	33'-11	142	4	33'-11	142	4	33'-11	142
5d8	ABUTMENT DIAPH. WING EXT. LONGIT.		-	-	-	-	-	-	-	-	-	48	10'-6	526	48	10'-6	526	48	10'-6	526	48	10'-6	526
8f1	ABUTMENT FOOTING LONGITUDINAL - B.F.		8	33'-10	723	8	33'-10	723	8	33'-10	723	8	33'-10	723	8	33'-10	723	8	33'-10	723	8	33'-10	723
8f2	ABUTMENT FOOTING LONGITUDINAL - F.F.		10	33'-10	904	10	33'-10	904	10	33'-10	904	10	33'-10	904	10	33'-10	904	10	33'-10	904	10	33'-10	904
8f3	ABUTMENT EXTENSION LONGITUDINAL		-	-	-	-	-	-	-	-	-	16	10'-2	435	16	10'-2	435	16	10'-2	435	16	10'-2	435
8f4	ABUTMENT EXTENSION LONGITUDINAL		-	-	-	-	-	-	-	-	-	16	9'-0	385	16	9'-0	385	16	9'-0	385	16	9'-0	385
8g1	ABUTMENT VERTICAL - B.F.		62	6'-7	1090	62	6'-7	1090	62	7'-2	1187	58	7'-8	1188	58	8'-5	1304	58	8'-5	1304	58	8'-5	1304
8g2	ABUTMENT VERTICAL - F.F.		52	5'-6	764	52	5'-6	764	52	6'-1	845	52	6'-7	915	52	7'-4	1019	52	7'-4	1019	52	7'-4	1019
8g3	ABUTMENT DIAPHRAGM VERTICAL - B.F.		50	15'-3	2036	50	15'-3	2036	50	15'-3	2036	50	15'-9	2103	50	15'-9	2103	50	15'-9	2103	50	15'-9	2103
6g4	ABUT. DIAPH. WING EXT. VERT.		-	-	-	-	-	-	-	-	-	40	5'-8	341	40	6'-5	386	40	6'-5	386	40	6'-5	386
5j1	SLAB TRANSV. TOP AT RAIL		128	6'-3	835	150	6'-3	978	182	6'-3	1187	216	6'-3	1409	242	6'-3	1578	270	6'-3	1761	296	6'-3	1930
5h1	ABUT. WING HORIZONTAL		56	6'-8	390	56	6'-8	390	56	6'-8	390	56	6'-8	390	56	6'-8	390	56	6'-8	390	56	6'-8	390
5h2	ABUTMENT TO WING ANCHOR		56	4'-0	234	56	4'-0	234	56	4'-0	234	8	4'-0	34	8	4'-0	34	8	4'-0	34	8	4'-0	34
5k1	PAVING NOTCH, TRANSVERSE		54	4'-11	277	54	4'-11	277	54	4'-11	277	54	4'-11	277	54	4'-11	277	54	4'-11	277	54	4'-11	277
5k2	PAVING NOTCH, TRANSVERSE		54	3'-5	193	54	3'-5	193	54	3'-5	193	54	3'-5	193	54	3'-5	193	54	3'-5	193	54	3'-5	193
5p1	ABUTMENT HOOPS		120	10'-6	1315	120	10'-6	1315	120	10'-6	1315	112	10'-6	1227	96	10'-6	1052	108	10'-6	1183	108	10'-6	1183
5p2	ABUTMENT EXT.HOOPS		-	-	-	-	-	-	-	-	-	24	10'-8	268	24	10'-8	268	24	10'-8	268	24	10'-8	268
6p3	ABUT. BOTT. AT PILES		-	-	-	-	-	-	-	-	-	32	6'-8	321	36	6'-8	361	40	6'-8	401	40	6'-8	401
5p4	ABUTMENT HOOPS AT ENDS		8	10'-9	90	8	10'-9	90	8	10'-9	90	8	10'-9	90	8	10'-9	90	8	10'-9	90	8	10'-9	90
5r1	PAVING BLOCK LIFTING HOOPS		8	2'-10	24	8	2'-10	24	8	2'-10	24	8	2'-10	24	8	2'-10	24	8	2'-10	24	8	2'-10	24
5s1	WING, VERTICAL		56	VARIES	263	56	VARIES	263	56	VARIES	263	56	VARIES	263	56	VARIES	263	56	VARIES	263	56	VARIES	263
4t1	UNDER BEAMS AT ABUTMENTS		10	4'-8	32	10	4'-8	32	10	4'-8	32	10	4'-8	32	10	4'-10	33	10	4'-10	33	10	4'-10	33
#2	PILE SPIRAL - NO. 2 BAR		12	38'-6	77	14	38'-6	90	14	38'-6	90	20	38'-6	128	22	38'-6	141	24	38'-6	154	24	38'-6	154
	SPIRAL SPACER L $\frac{7}{8}\times\frac{7}{8}\times\frac{1}{8}\times$ 0.70		24	1'-10	32	28	1'-10	37	28	1'-10	37	40	1'-10	52	44	1'-10	58	48	1'-10	63	48	1'-10	63
	REINFORCING STEEL - NON-EPOXY COATED (LBS.)				21,024			22,977			26,038			31,418			33,898			36,526			38,854
	SEE BARRIER RAIL DETAILS (LBS.)				3870			4226			4784			5809			6245			6682			7160
	SEE OPEN RAIL DETAILS (LBS.)				4215			4734			5444			7095			7691			8240			8752

* VARIES FROM 4'-5 TO 29'-7 ** VARIES FROM 3'-0 TO 31'-0

CONCRETE PLACEMENT QUANTITIES
(SUPERSTRUCTURE PLUS INTEGRAL ABUTMENTS)

			46'-8	55'-0	67'-6	80'-0	90'-0	100'-0	110'-0
SLAB, AND ABUT. DIAPHRAGM	WITH BARRIER RAIL	CU.YD.	67.6	74.4	88.7	108.3	123.6	132.4	141.0
	WITH OPEN RAIL	CU.YD.	69.1	76.1	90.8	110.7	126.4	135.4	144.4
PAVING BLOCKS		CU.YD.	1.5	1.5	1.5	1.6	1.6	1.6	1.6
ABUTMENT WINGS		CU.YD.	6.9	6.9	6.9	6.9	6.9	6.9	6.9
ABUTMENT FOOTINGS		CU.YD.	27.6	27.6	27.6	35.3	35.3	35.3	35.3

ESTIMATED QUANTITIES
(SUPERSTRUCTURE PLUS INTEGRAL ABUTMENTS)

			46'-8	55'-0	67'-6	80'-0	90'-0	100'-0	110'-0
NO. OF STEEL H-PILES FOR TWO ABUTS. (HP10X42)		NO.	12	14	14	20	22	24	24
STRUCTURAL CONCRETE, (BRIDGE)	WITH BARRIER RAIL	CU.YD.	103.6	110.4	124.7	152.1	167.4	176.2	184.8
	WITH OPEN RAIL	CU.YD.	105.1	112.1	126.8	154.5	170.2	179.2	188.2
CONCRETE RAIL (BARRIER OR OPEN)		L.F.	127.5	144.2	169.2	214.2	234.2	254.2	274.2
REINFORCING STEEL	WITH BARRIER RAIL	LBS.	24,894	27,203	30,822	37,227	40,143	43,208	46,014
	WITH OPEN RAIL	LBS.	25,239	27,711	31,482	38,513	41,589	44,766	47,606
STRUCTURAL STEEL	WITH BARRIER RAIL	LBS.	1532	1526	1570	1610	1695	1695	1695
	WITH OPEN RAIL	LBS.	1242	1235	1235	1235	1265	1265	1265

BENT BAR DETAILS

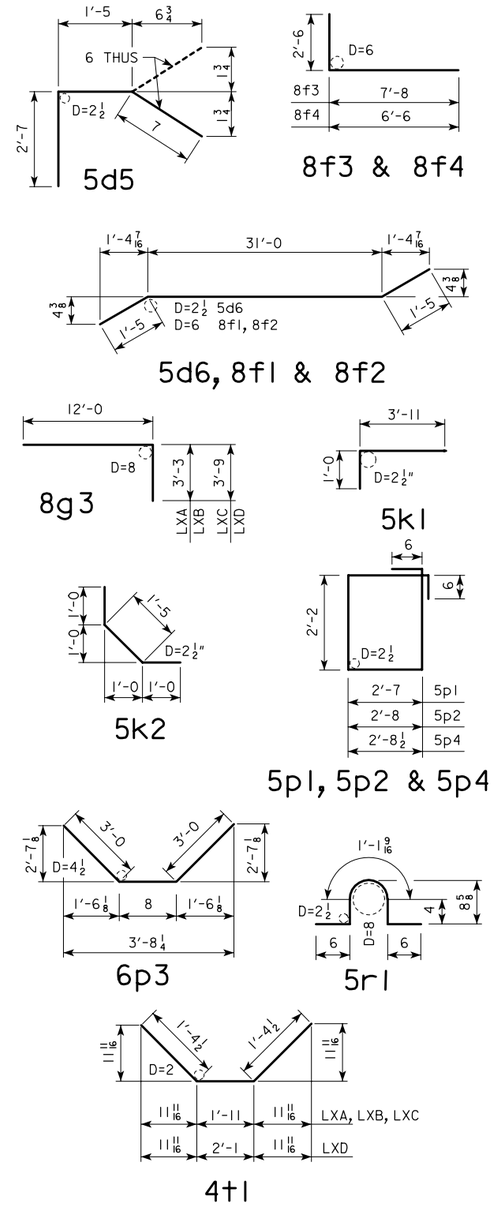

NOTE: ALL DIMENSIONS ARE OUT TO OUT. D= PIN DIAMETER

LATEST REVISION DATE :

APPROVED BY

STANDARD DESIGN - 30' ROADWAY, SINGLE SPAN BRIDGE

PRETENSIONED PRESTRESSED CONCRETE BEAM BRIDGES

JANUARY, 2005 HS20-44 LOADING

IOWA DEPARTMENT OF TRANSPORTATION - HIGHWAY DIVISION

DECK & ABUTMENT REINF. H30SI-15-05

EPOXY COATED REINFORCING BAR LIST

ONE SUPERSTRUCTURE AND TWO ABUTMENTS

BRIDGE LENGTH

BAR	LOCATION	SHAPE	46'-8 LXA NO.	46'-8 LXA LENGTH	46'-8 LXA WEIGHT	55'-0 LXA NO.	55'-0 LXA LENGTH	55'-0 LXA WEIGHT	67'-6 LXB NO.	67'-6 LXB LENGTH	67'-6 LXB WEIGHT	80'-0 LXC NO.	80'-0 LXC LENGTH	80'-0 LXC WEIGHT	90'-0 LXD NO.	90'-0 LXD LENGTH	90'-0 LXD WEIGHT	100'-0 LXD NO.	100'-0 LXD LENGTH	100'-0 LXD WEIGHT	110'-0 LXD NO.	110'-0 LXD LENGTH	110'-0 LXD WEIGHT
6a1	SLAB TRANSVERSE, TOP & BOTTOM		111	32'-10	5475	133	32'-10	6559	165	32'-10	8138	199	32'-10	9814	225	32'-10	11,097	253	32'-10	12,477	279	32'-10	13,760
6a2	SLAB TRANSVERSE ENDS, TOP		20	*	511	20	*	511	20	*	511	20	*	511	20	*	511	20	*	511	20	*	511
6a3	SLAB TRANSVERSE ENDS, BOTTOM		22	**	562	22	**	562	22	**	562	22	**	562	22	**4	562	22	**	562	22	**	562
5b1	SLAB LONGITUDINAL TOP & BOTTOM		168	25'-10	4527	168	29'-11	5243	168	36'-2	6338	252	29'-0	7623	252	32'-4	8499	252	35'-8	9375	252	39'-0	10,251
5d6	ABUTMENT DIAPHRAGM LONGITUDINAL - B.F.		8	33'-10	283	8	33'-10	283	8	33'-10	283	8	33'-10	283	8	33'-10	283	8	33'-10	283	8	33'-10	283
5d7	PAVING NOTCH, LONGITUDINAL		4	29'-7	124	4	29'-7	124	4	29'-7	124	4	33'-11	142	4	33'-11	142	4	33'-11	142	4	33'-11	142
8f1	ABUTMENT FOOTING LONGITUDINAL - B.F.		8	33'-10	723	8	33'-10	723	8	33'-10	723	8	33'-10	723	8	33'-10	723	8	33'-10	723	8	33'-10	723
8g1	ABUTMENT VERTICAL - B.F.		62	6'-7	1090	62	6'-7	1090	62	7'-2	1187	58	7'-8	1188	58	8'-5	1304	58	8'-5	1304	58	8'-5	1304
8g3	ABUTMENT DIAPHRAGM VERTICAL - B.F.		50	15'-3	2036	50	15'-3	2036	50	15'-3	2036	50	15'-9	2103	50	15'-9	2103	50	15'-9	2103	50	15'-9	2103
5j1	SLAB TRANSV. TOP AT RAIL		128	6'-3	835	150	6'-3	978	182	6'-3	1187	216	6'-3	1409	242	6'-3	1578	270	6'-3	1761	296	6'-3	1930
5k1	PAVING NOTCH, TRANSVERSE		54	4'-11	277	54	4'-11	277	54	4'-11	277	54	4'-11	277	54	4'-11	277	54	4'-11	277	54	4'-11	277
5k2	PAVING NOTCH, TRANSVERSE		54	3'-5	193	54	3'-5	193	54	3'-5	193	54	3'-5	193	54	3'-5	193	54	3'-5	193	54	3'-5	193
5p1	ABUTMENT HOOPS		120	10'-6	1315	120	10'-6	1315	120	10'-6	1315	112	10'-6	1227	96	10'-6	1052	108	10'-6	1183	108	10'-6	1183
6p3	ABUT. BOTT. AT PILES		-	-	-	-	-	-	-	-	-	32	6'-8	321	36	6'-8	361	40	6'-8	401	40	6'-8	401
5p4	ABUTMENT HOOPS AT ENDS		8	10'-9	90	8	10'-9	90	8	10'-9	90	8	10'-9	90	8	10'-9	90	8	10'-9	90	8	10'-9	90
	REINFORCING STEEL - EPOXY COATED (LBS.)				18,041			19,984			22,964			26,466			28,775			31,385			33,713
	SEE BARRIER RAIL DETAILS (LBS.)				3870			4226			4784			5809			6245			6682			7160
	SEE OPEN RAIL DETAILS (LBS.)				4215			4734			5444			7095			7691			8240			8752

NON-EPOXY COATED REINFORCING BAR LIST

ONE SUPERSTRUCTURE AND TWO ABUTMENTS

BRIDGE LENGTH

BAR	LOCATION	SHAPE	46'-8 LXA NO.	46'-8 LXA LENGTH	46'-8 LXA WEIGHT	55'-0 LXA NO.	55'-0 LXA LENGTH	55'-0 LXA WEIGHT	67'-6 LXB NO.	67'-6 LXB LENGTH	67'-6 LXB WEIGHT	80'-0 LXC NO.	80'-0 LXC LENGTH	80'-0 LXC WEIGHT	90'-0 LXD NO.	90'-0 LXD LENGTH	90'-0 LXD WEIGHT	100'-0 LXD NO.	100'-0 LXD LENGTH	100'-0 LXD WEIGHT	110'-0 LXD NO.	110'-0 LXD LENGTH	110'-0 LXD WEIGHT
5d2	ABUTMENT DIAPHRAGM, LONGITUDINAL - F.F.		24	6'-4	159	24	6'-1	153	24	6'-1	153	24	6'-1	153	24	6'-3	157	24	6'-3	157	24	6'-3	157
5d3	ABUTMENT DIAPHRAGM, LONGITUDINAL - F.F.		8	5'-5	46	8	5'-2	44	8	5'-2	44	8	5'-2	44	8	5'-0	42	8	5'-0	42	8	5'-0	42
5d5	ABUTMENT DIAPHRAGM, LONGITUDINAL - END		12	4'-7	58	12	4'-7	58	12	4'-7	58	12	4'-7	58	12	4'-7	58	12	4'-7	58	12	4'-7	58
5d8	ABUTMENT DIAPH. WING EXT. LONGIT.		-	-	-	-	-	-	-	-	-	48	10'-6	526	48	10'-6	526	48	10'-6	526	48	10'-6	526
8f2	ABUTMENT FOOTING LONGITUDINAL - F.F.		10	33'-10	904	10	33'-10	904	10	33'-10	904	10	33'-10	904	10	33'-10	904	10	33'-10	904	10	33'-10	904
8f3	ABUTMENT EXTENSION LONGITUDINAL		-	-	-	-	-	-	-	-	-	16	10'-2	435	16	10'-2	435	16	10'-2	435	16	10'-2	435
8f4	ABUTMENT EXTENSION LONGITUDINAL		-	-	-	-	-	-	-	-	-	16	9'-0	385	16	9'-0	385	16	9'-0	385	16	9'-0	385
8g2	ABUTMENT VERTICAL - F.F.		52	5'-6	764	52	5'-6	764	52	6'-1	845	52	6'-7	915	52	7'-4	1019	52	7'-4	1019	52	7'-4	1019
6g4	ABUT. DIAPH. WING EXT. VERT.		-	-	-	-	-	-	-	-	-	40	5'-8	341	40	6'-5	386	40	6'-5	386	40	6'-5	386
5h1	ABUT. WING HORIZONTAL		56	6'-8	390	56	6'-8	390	56	6'-8	390	56	6'-8	390	56	6'-8	390	56	6'-8	390	56	6'-8	390
5h2	ABUTMENT TO WING ANCHOR		56	4'-0	234	56	4'-0	234	56	4'-0	234	8	4'-0	34	8	4'-0	34	8	4'-0	34	8	4'-0	34
5p2	ABUT. EXTENSION HOOPS		-	-	-	-	-	-	-	-	-	24	10'-8	268	24	10'-8	268	24	10'-8	268	24	10'-8	268
5r1	PAVING BLOCK LIFTING HOOPS		8	2'-10	24	8	2'-10	24	8	2'-10	24	8	2'-10	24	8	2'-10	24	8	2'-10	24	8	2'-10	24
5s1	WING, VERTICAL		56	VARIES	263	56	VARIES	263	56	VARIES	263	56	VARIES	263	56	VARIES	263	56	VARIES	263	56	VARIES	263
4t1	UNDER BEAMS AT ABUTMENTS		10	4'-8	32	10	4'-8	32	10	4'-8	32	10	4'-8	32	10	4'-10	33	10	4'-10	33	10	4'-10	33
#2	PILE SPIRAL - NO. 2 BAR		12	38'-6	77	14	38'-6	90	14	38'-6	90	20	38'-6	128	22	38'-6	141	24	38'-6	154	24	38'-6	154
	SPIRAL SPACER L $\frac{7}{8}\times\frac{7}{8}\times\frac{1}{8}\times$ 0.70		24	1'-10	32	28	1'-10	37	28	1'-10	37	40	1'-10	52	44	1'-10	58	48	1'-10	63	48	1'-10	63
* VARIES FROM 4'-5 TO 29'-7 ** VARIES FROM 3'-0 TO 31'-0																							
	REINFORCING STEEL - NON-EPOXY COATED (LBS.)				2983			2993			3074			4952			5123			5141			5141

CONCRETE PLACEMENT QUANTITIES

(SUPERSTRUCTURE PLUS INTEGRAL ABUTMENTS)

			46'-8	55'-0	67'-6	80'-0	90'-0	100'-0	110'-0
SLAB, AND ABUT. DIAPHRAGM	WITH BARRIER RAIL	CU.YD.	67.6	74.4	88.7	108.3	123.6	132.4	141.0
	WITH OPEN RAIL	CU.YD.	69.1	76.1	90.8	110.7	126.4	135.4	144.4
PAVING BLOCKS		CU.YD.	1.5	1.5	1.5	1.6	1.6	1.6	1.6
ABUTMENT WINGS		CU.YD.	6.9	6.9	6.9	6.9	6.9	6.9	6.9
ABUTMENT FOOTINGS		CU.YD.	27.6	27.6	27.6	35.3	35.3	35.3	35.3

ESTIMATED QUANTITIES

(SUPERSTRUCTURE PLUS INTEGRAL ABUTMENTS)

			46'-8	55'-0	67'-6	80'-0	90'-0	100'-0	110'-0
NO. OF STEEL H-PILES FOR TWO ABUTS. (HP10X42)		NO.	12	14	14	20	22	24	24
STRUCTURAL CONCRETE, (BRIDGE)	WITH BARRIER RAIL	CU.YD.	103.6	110.4	124.7	152.1	167.4	176.2	184.8
	WITH OPEN RAIL	CU.YD.	105.1	112.1	126.8	154.5	170.2	179.2	188.2
CONCRETE RAIL (BARRIER OR OPEN)		L.F.	127.5	144.2	169.2	214.2	234.2	254.2	274.2
REINFORCING STEEL EPOXY COATED	WITH BARRIER RAIL	LBS.	21,911	24,210	27,748	32,275	35,020	38,067	40,873
	WITH OPEN RAIL	LBS.	22,256	24,718	28,408	33,561	36,466	39,625	42,465
REINFORCING STEEL		LBS.	2983	2993	3074	4952	5123	5141	5141
STRUCTURAL STEEL	WITH BARRIER RAIL	LBS.	1532	1526	1570	1610	1695	1695	1695
	WITH OPEN RAIL	LBS.	1242	1235	1235	1235	1265	1265	1265

BENT BAR DETAILS

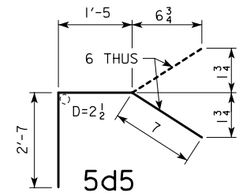

5d5

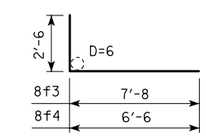

8f3 & 8f4

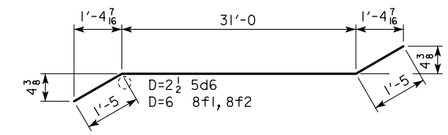

5d6, 8f1 & 8f2

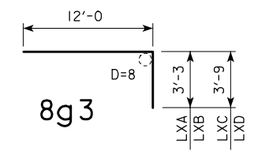

8g3

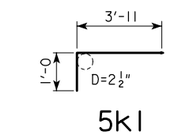

5k1

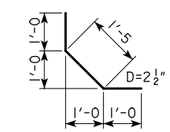

5k2

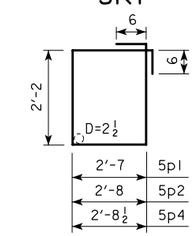

5p1, 5p2 & 5p4

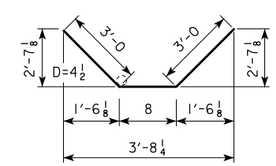

6p3

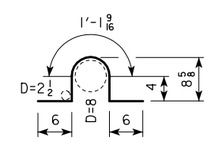

5r1

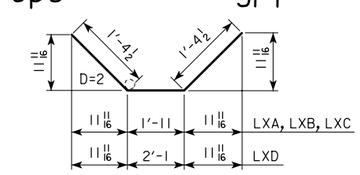

4t1

NOTE: ALL DIMENSIONS ARE OUT TO OUT. D= PIN DIAMETER

LATEST REVISION DATE :

APPROVED BY

STANDARD DESIGN - 30' ROADWAY, SINGLE SPAN BRIDGE

PRETENSIONED PRESTRESSED CONCRETE BEAM BRIDGES

JANUARY, 2005 HS20-44 LOADING

IOWA DEPARTMENT OF TRANSPORTATION - HIGHWAY DIVISION

DECK & ABUTMENT REINF. H30S1-16-05 EPOXY

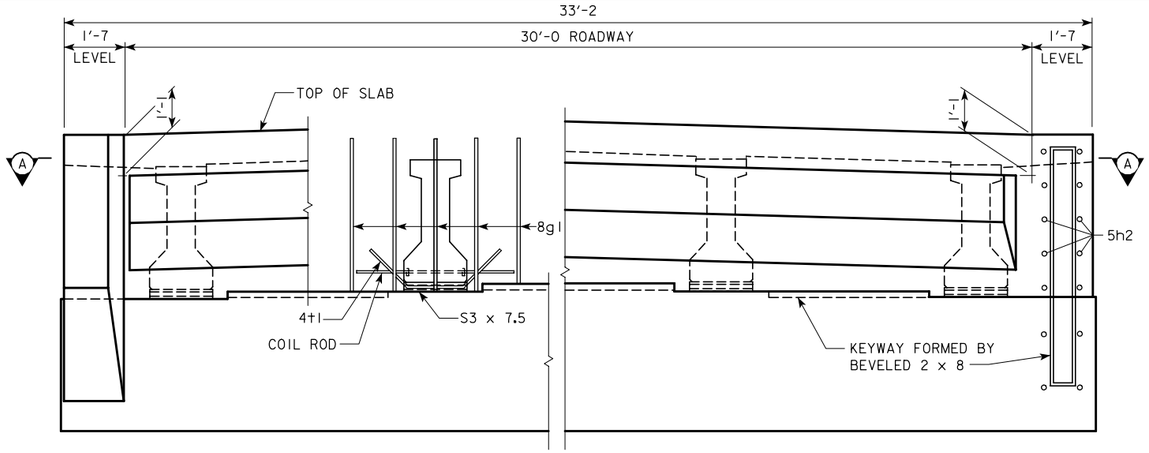

PART REAR ELEVATION AT ABUTMENT

NOTE: BARRIER RAIL NOT SHOWN.
(SHOWN FOR SOLID BARRIER RAIL)

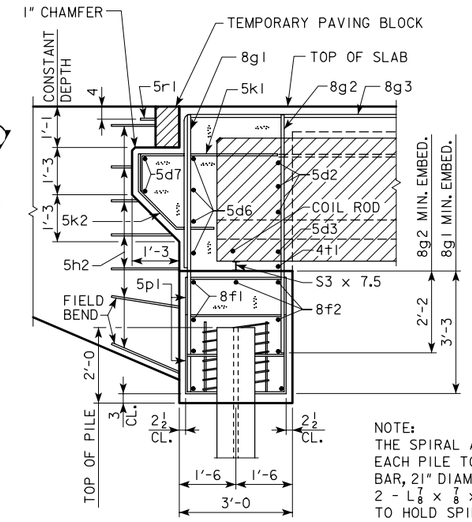

NOTE:
THE SPIRAL AT THE TOP OF EACH PILE TO BE 7 TURNS OF No. 2 BAR, 21" DIAMETER, 3" PITCH WITH 2 - $L\frac{7}{8} \times \frac{7}{8} \times \frac{1}{8}$ SPACERS PUNCHED TO HOLD SPIRAL.

PART SECTION B-B

ABUTMENT PILE SPACING

DIMENSION OR NO.	℄ TO ℄ ABUTMENT BEARING		
	46'-8	55'-0	67'-6
"A" PILE SPACES	5	6	7
"B" (FT. - IN.)	6'-11	5'-9	4'-11
"C" (FT. - IN.)	$1'-11\frac{7}{16}$	$1'-11\frac{15}{16}$	$2'-0\frac{7}{16}$
"D" EQUAL SPACES	5	4	3
NO. OF PILES PER ABUT.	6	7	8
DESIGN PILE LOAD (TONS)	35	33	34

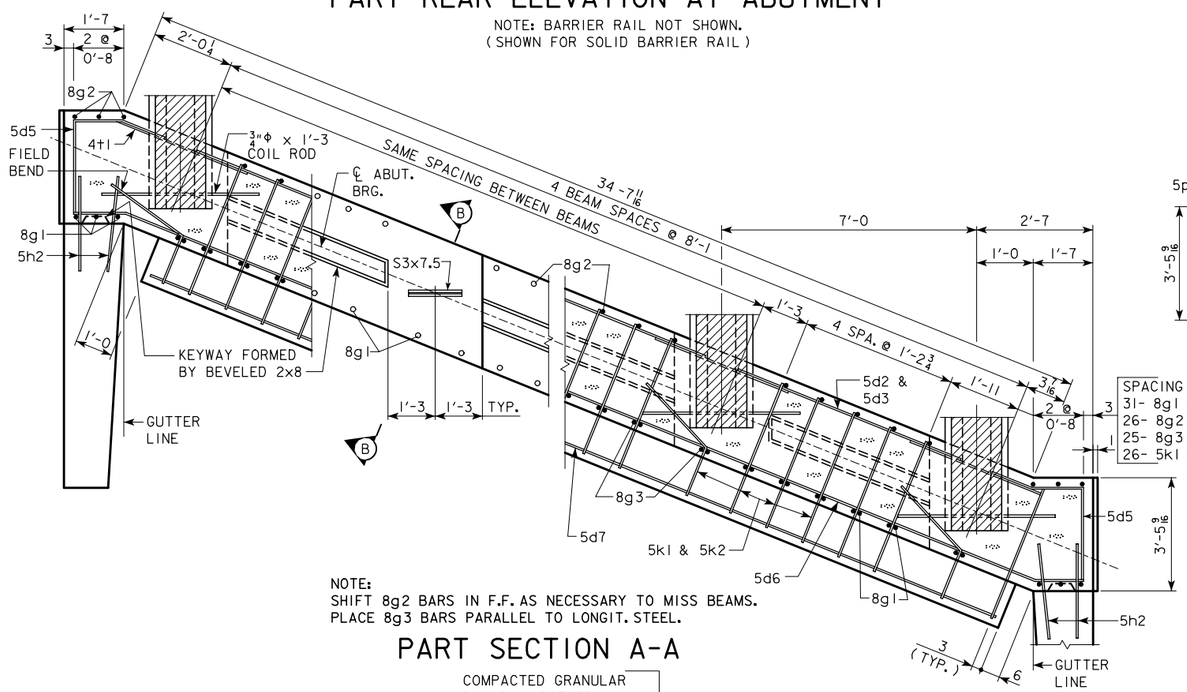

NOTE:
SHIFT 8g2 BARS IN F.F. AS NECESSARY TO MISS BEAMS.
PLACE 8g3 BARS PARALLEL TO LONGIT. STEEL.

PART SECTION A-A

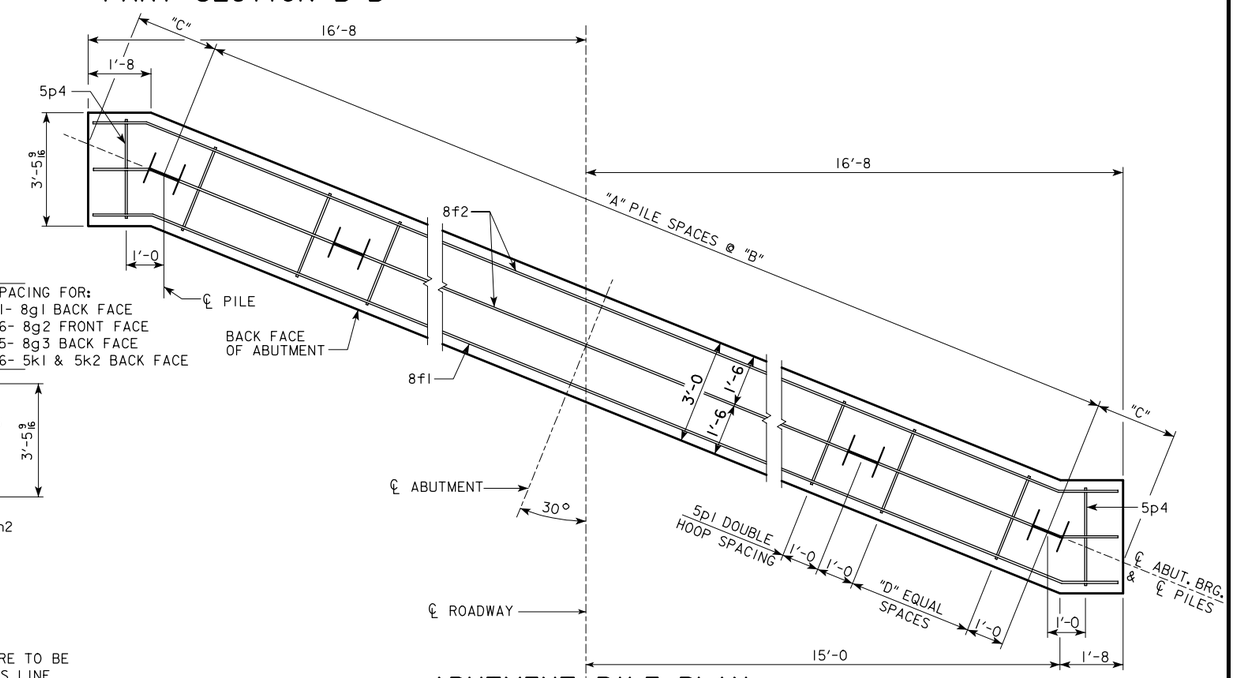

ABUTMENT PILE PLAN

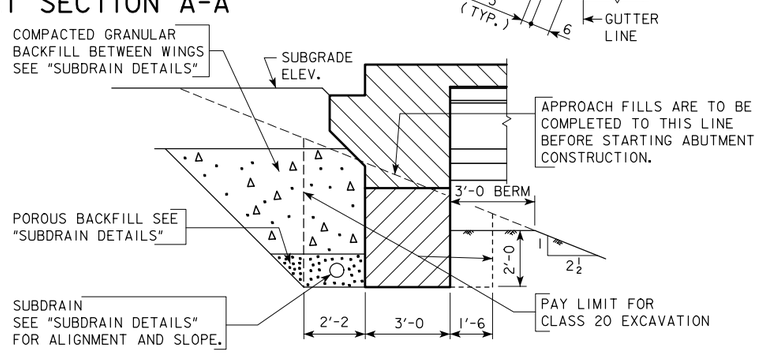

ABUTMENT EXCAVATION DETAILS

ABUTMENT NOTES:

MINIMUM CLEAR DISTANCE FROM FACE OF CONCRETE TO NEAR REINFORCING BAR IS TO BE 2" UNLESS OTHERWISE NOTED OR SHOWN.

LATEST REVISION DATE :

APPROVED BY

STANDARD DESIGN - 30' ROADWAY, SINGLE SPAN BRIDGE

PRETENSIONED PRESTRESSED CONCRETE BEAM BRIDGES

JANUARY, 2005 HS20-44 LOADING

IOWA DEPARTMENT OF TRANSPORTATION - HIGHWAY DIVISION

ABUTMENT DETAILS

30° SKEW A & B BEAMS

H30SI-17-05

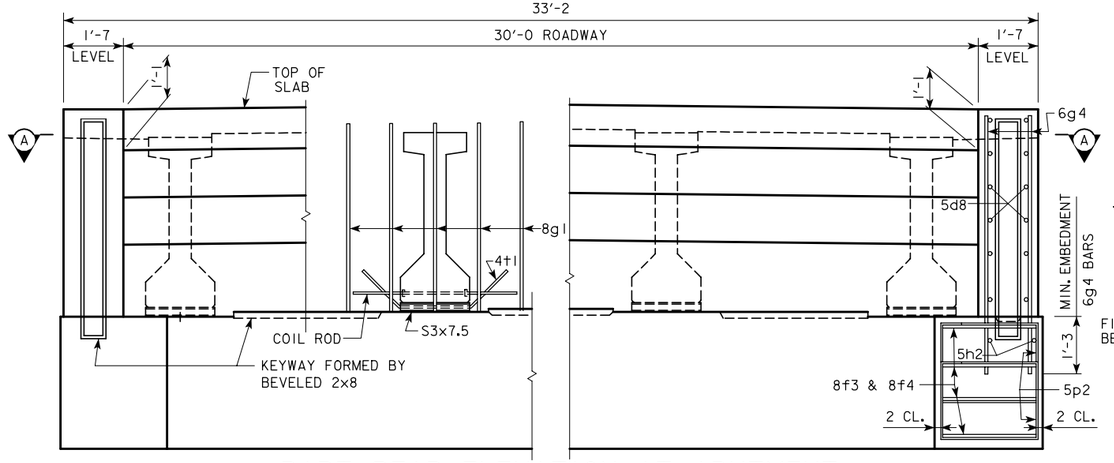

PART REAR ELEVATION AT ABUTMENT

NOTE: BARRIER RAIL AND WINGS NOT SHOWN.
(SHOWN FOR SOLID BARRIER RAIL)

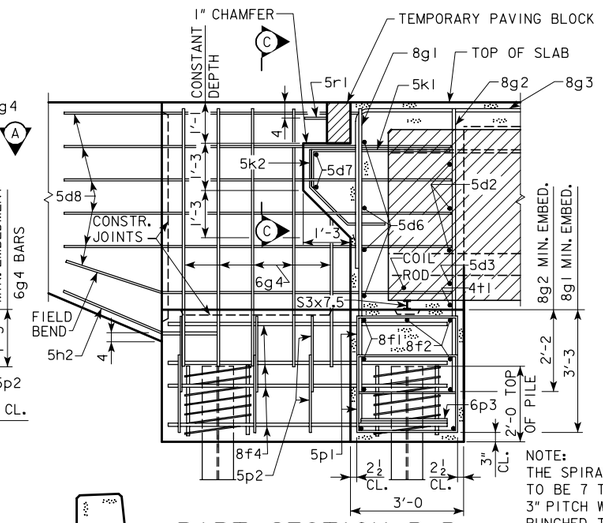

PART SECTION B-B

NOTE:
THE SPIRAL AT THE TOP OF EACH PILE TO BE 7 TURNS OF No. 2 BAR, 21" DIAMETER, 3" PITCH WITH 2 - L 7/8 x 7/8 x 1/8 SPACERS PUNCHED TO HOLD SPIRAL.

ABUTMENT PILE SPACING				
DIMENSION OR NO.	℄ TO ℄ ABUTMENT BEARING			
	80'-0	90'-0	100'-0	110'-0
"A" PILE SPACES	7	8	9	9
"B" (FT. - IN.)	4'-11	4'-3	3'-10	3'-10
"C" (FT. - IN.)	2'-0 7/16	2'-2 15/16	1'-11 15/16	1'-11 15/16
"D" EQUAL SPACES	3	3	2	2
NO. OF PILES PER ABUT.	10	11	12	12
DESIGN PILE LOAD (TONS)	37	37	35	37

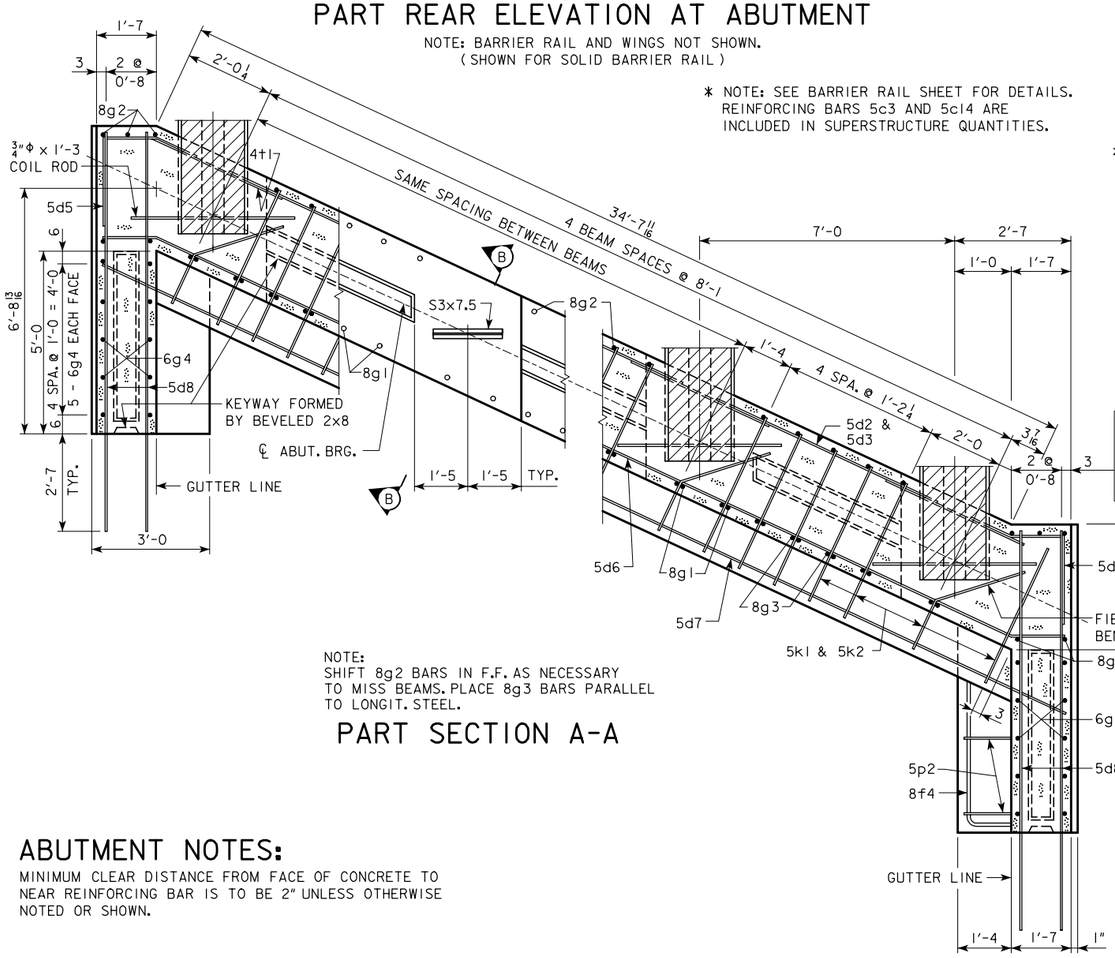

SPACING FOR:
29-8g1 BACK FACE
26-8g2 FRONT FACE
25-8g3 BACK FACE
26-5k1 & 5k2 BACK FACE

* NOTE: SEE BARRIER RAIL SHEET FOR DETAILS. REINFORCING BARS 5c3 AND 5c14 ARE INCLUDED IN SUPERSTRUCTURE QUANTITIES.

NOTE:
SHIFT 8g2 BARS IN F.F. AS NECESSARY TO MISS BEAMS. PLACE 8g3 BARS PARALLEL TO LONGIT. STEEL.

PART SECTION A-A

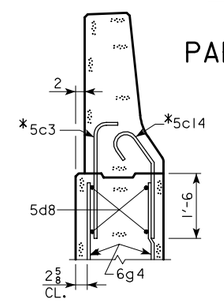

PART SECTION C-C

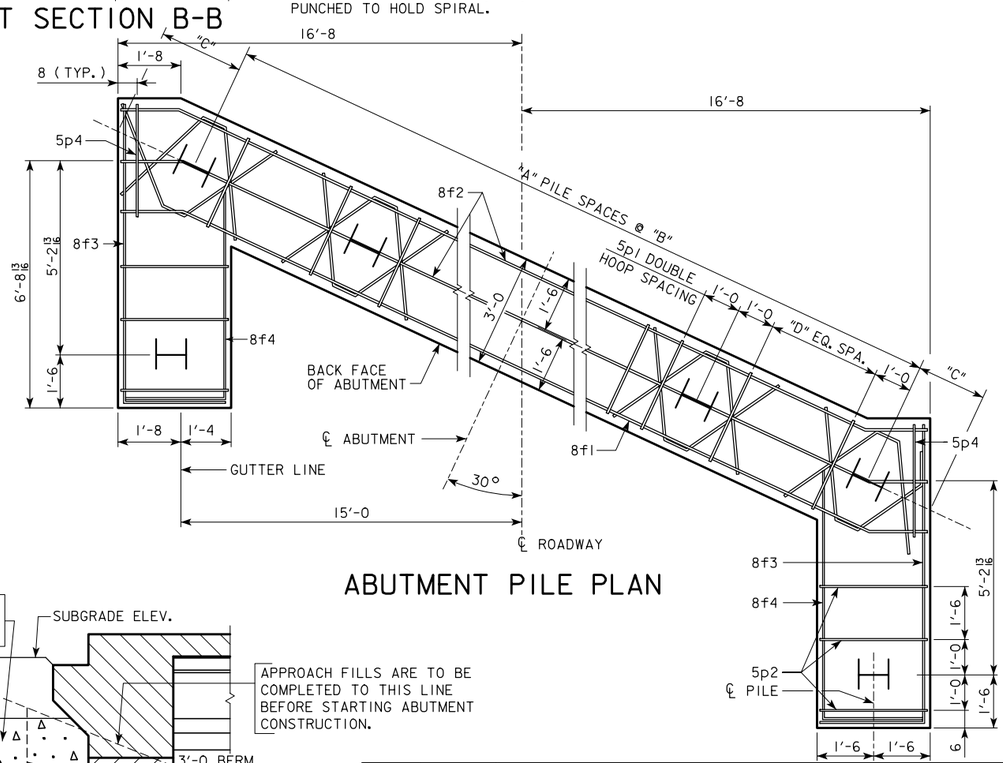

ABUTMENT PILE PLAN

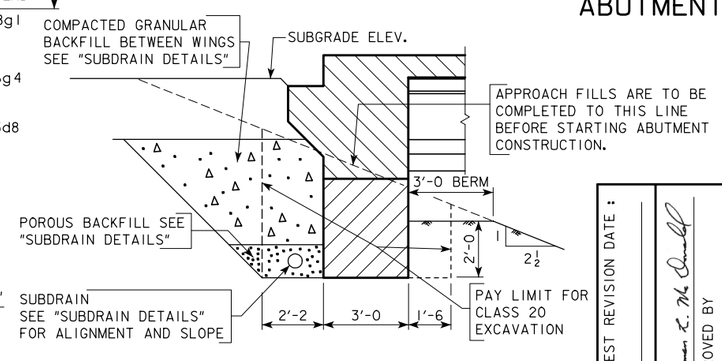

ABUTMENT EXCAVATION DETAILS

ABUTMENT NOTES:

MINIMUM CLEAR DISTANCE FROM FACE OF CONCRETE TO NEAR REINFORCING BAR IS TO BE 2" UNLESS OTHERWISE NOTED OR SHOWN.

LATEST REVISION DATE :

APPROVED BY

STANDARD DESIGN - 30' ROADWAY, SINGLE SPAN BRIDGE

PRETENSIONED PRESTRESSED CONCRETE BEAM BRIDGES

JANUARY, 2005 HS20-44 LOADING

IOWA DEPARTMENT OF TRANSPORTATION - HIGHWAY DIVISION

ABUTMENT DETAILS

30° SKEW C & D BEAMS

H30SI-18-05

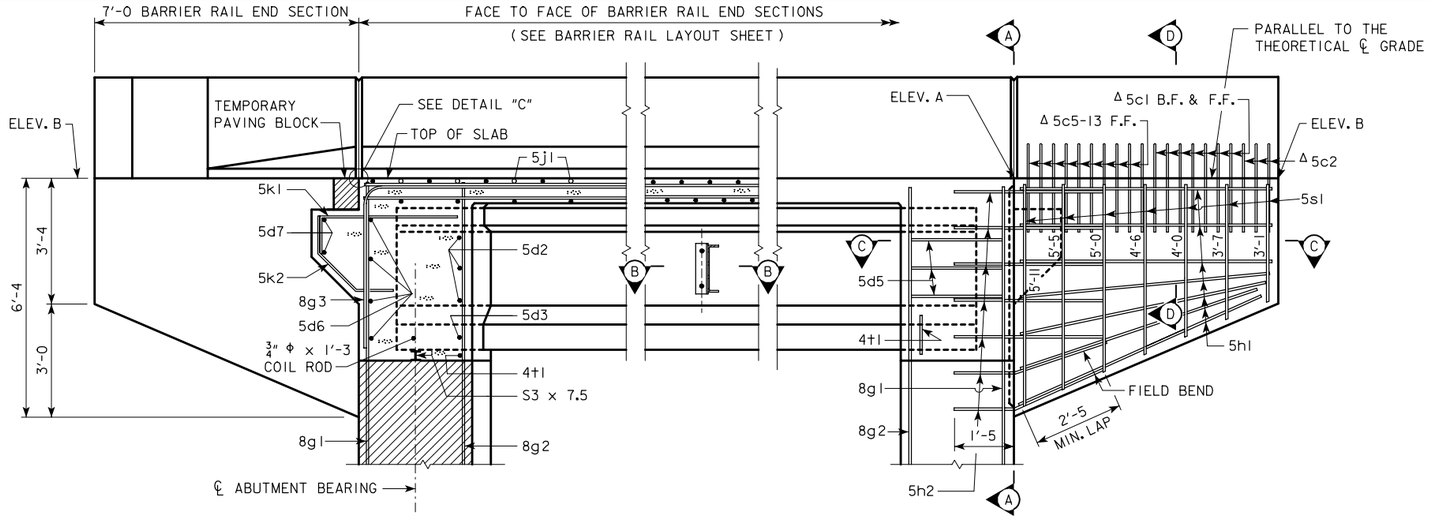

PART LONGITUDINAL SECTION NEAR GUTTER

(FOR DETAILS OF INTERMEDIATE DIAPHRAGM SEE SHEET H30S1-33)

PART END VIEW AT ABUTMENT

PROVIDE ELEVATIONS A AND B IN THE BRIDGE PLAN SHEETS.

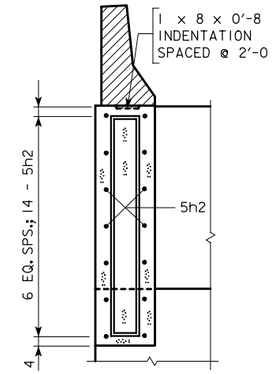

SECTION A-A

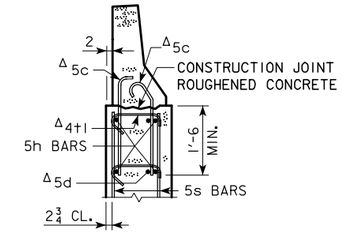

SECTION D-D

Δ NOTE:
SEE END SECTION DETAILS IN THESE PLANS FOR DETAILS OF BARRIER RAIL END SECTION AND SPACING FOR 5c BARRIER RAIL BARS. REINFORCING BARS "5c", "5d" AND "4+1" ARE INCLUDED IN THE SUPERSTRUCTURE QUANTITIES.

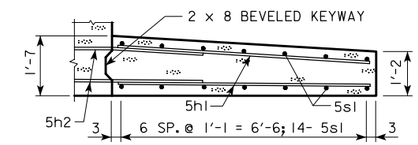

PART SECTION C-C

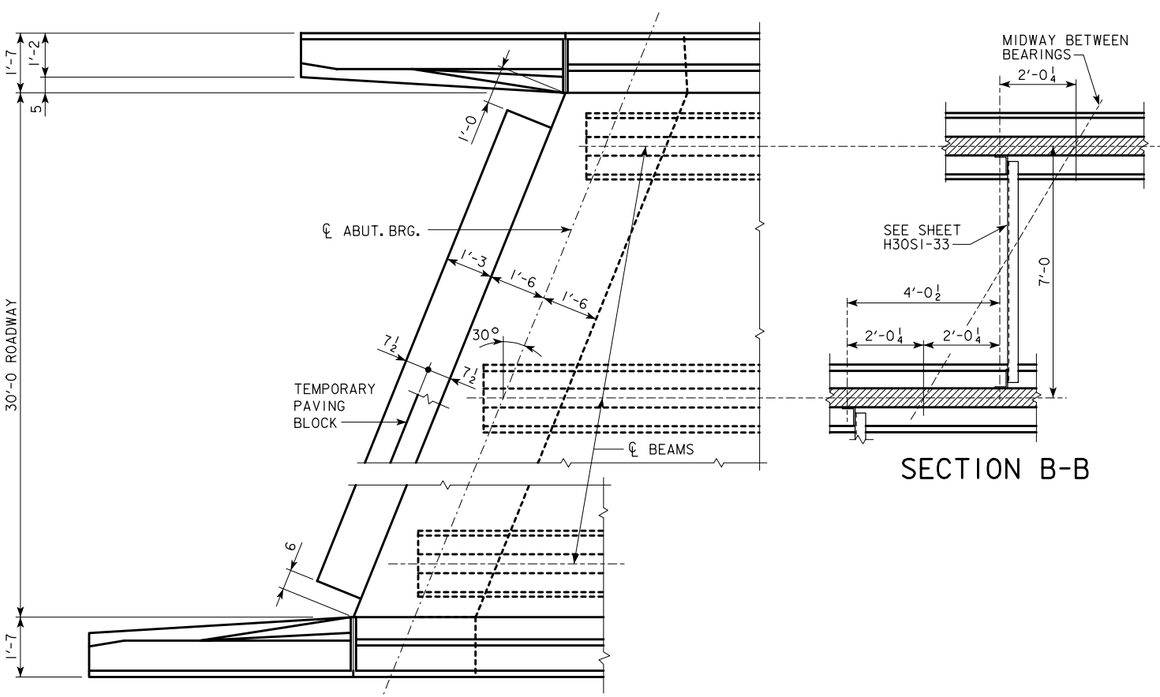

PART PLAN

SECTION B-B

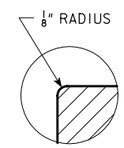

DETAIL "C"

(TEMPORARY PAVING BLOCK NOT SHOWN)

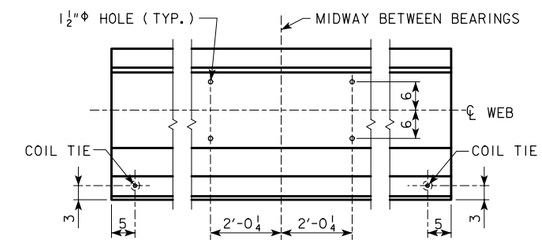

LOCATION OF BEAM COIL TIES AND STEEL DIAPHRAGM BOLT HOLES

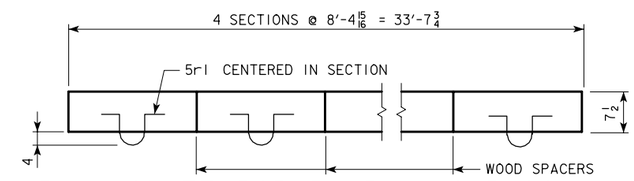

PLAN OF TEMPORARY PAVING BLOCK

NOTE: LINE PAVING NOTCH WITH TAR PAPER BEFORE PLACING THE TEMPORARY PAVING BLOCK.

LATEST REVISION DATE :

APPROVED BY

STANDARD DESIGN - 30' ROADWAY, SINGLE SPAN BRIDGE

PRETENSIONED PRESTRESSED CONCRETE BEAM BRIDGES

JANUARY, 2005 HS20-44 LOADING

IOWA DEPARTMENT OF TRANSPORTATION - HIGHWAY DIVISION

LONGITUDINAL SECTION

30° SKEW A & B BEAMS

H30S1-19-05

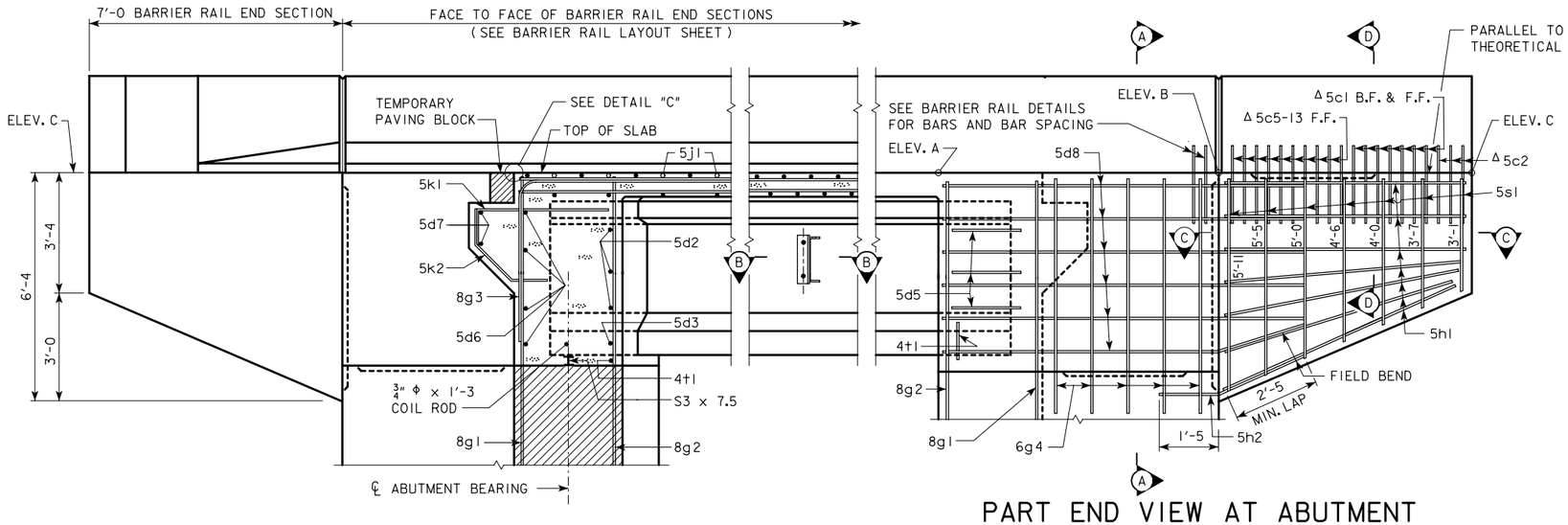

PART LONGITUDINAL SECTION NEAR GUTTER

(FOR DETAILS OF INTERMEDIATE DIAPHRAGM SEE SHEET H30SI-33)

PART END VIEW AT ABUTMENT

PROVIDE ELEVATIONS A, B, AND C IN THE BRIDGE PLAN SHEETS.

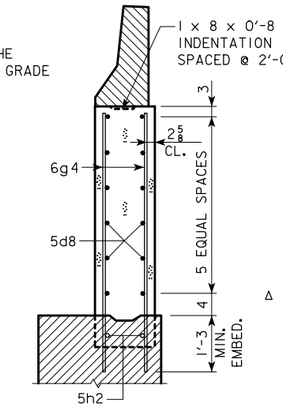

SECTION A-A

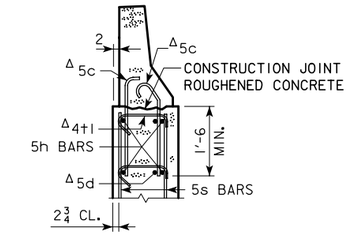

SECTION D-D

Δ NOTE:
SEE END SECTION DETAILS IN THESE PLANS FOR DETAILS OF BARRIER RAIL END SECTION AND SPACING FOR 5c BARRIER RAIL BARS. REINFORCING BARS "5c", "5d" AND "4t1" ARE INCLUDED IN THE SUPERSTRUCTURE QUANTITIES.

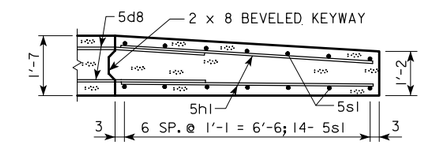

PART SECTION C-C

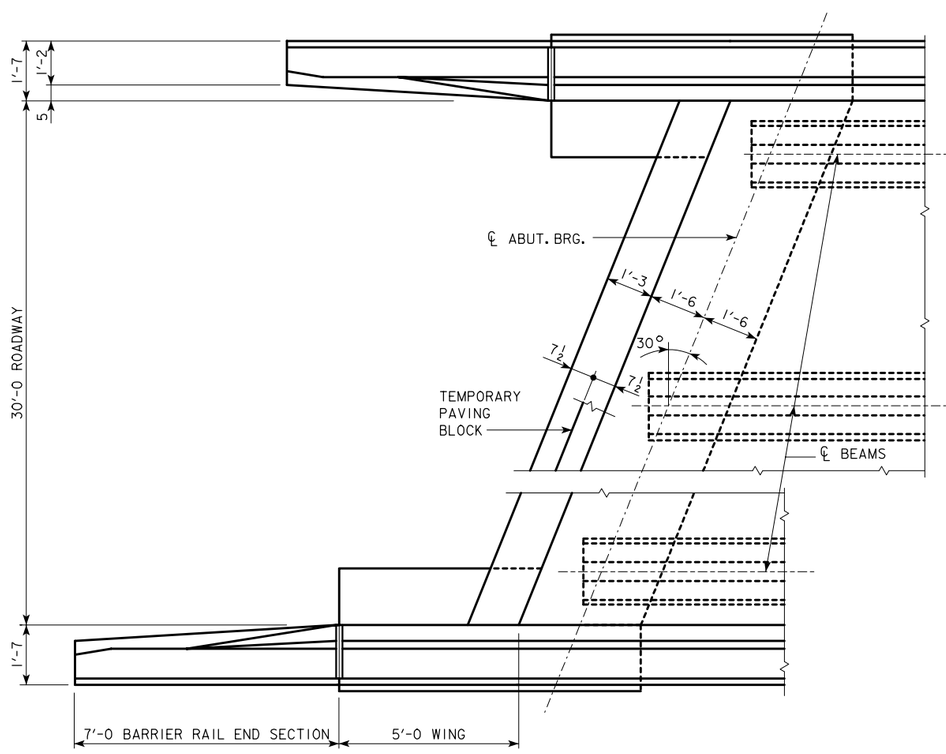

PART PLAN

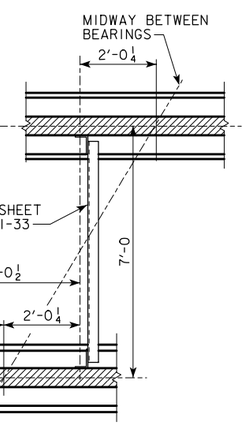

SECTION B-B

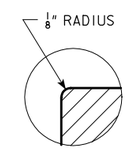

DETAIL "C"

(TEMPORARY PAVING BLOCK NOT SHOWN)

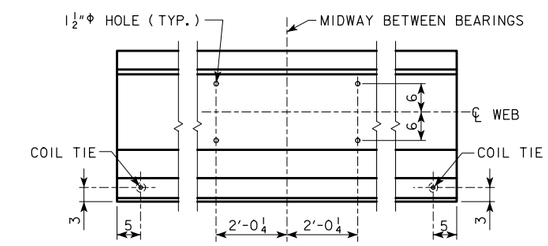

LOCATION OF BEAM COIL TIES AND STEEL DIAPHRAGM BOLT HOLES

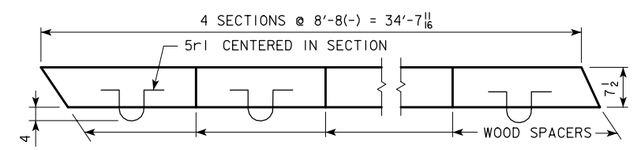

PLAN OF TEMPORARY PAVING BLOCK

NOTE: LINE PAVING NOTCH WITH TAR PAPER BEFORE PLACING THE TEMPORARY PAVING BLOCK.

LATEST REVISION DATE :

APPROVED BY

STANDARD DESIGN - 30' ROADWAY, SINGLE SPAN BRIDGE

PRETENSIONED PRESTRESSED CONCRETE BEAM BRIDGES

JANUARY, 2005 HS20-44 LOADING

IOWA DEPARTMENT OF TRANSPORTATION - HIGHWAY DIVISION

LONGITUDINAL SECTION

30° SKEW C & D BEAMS

H30SI-20-05

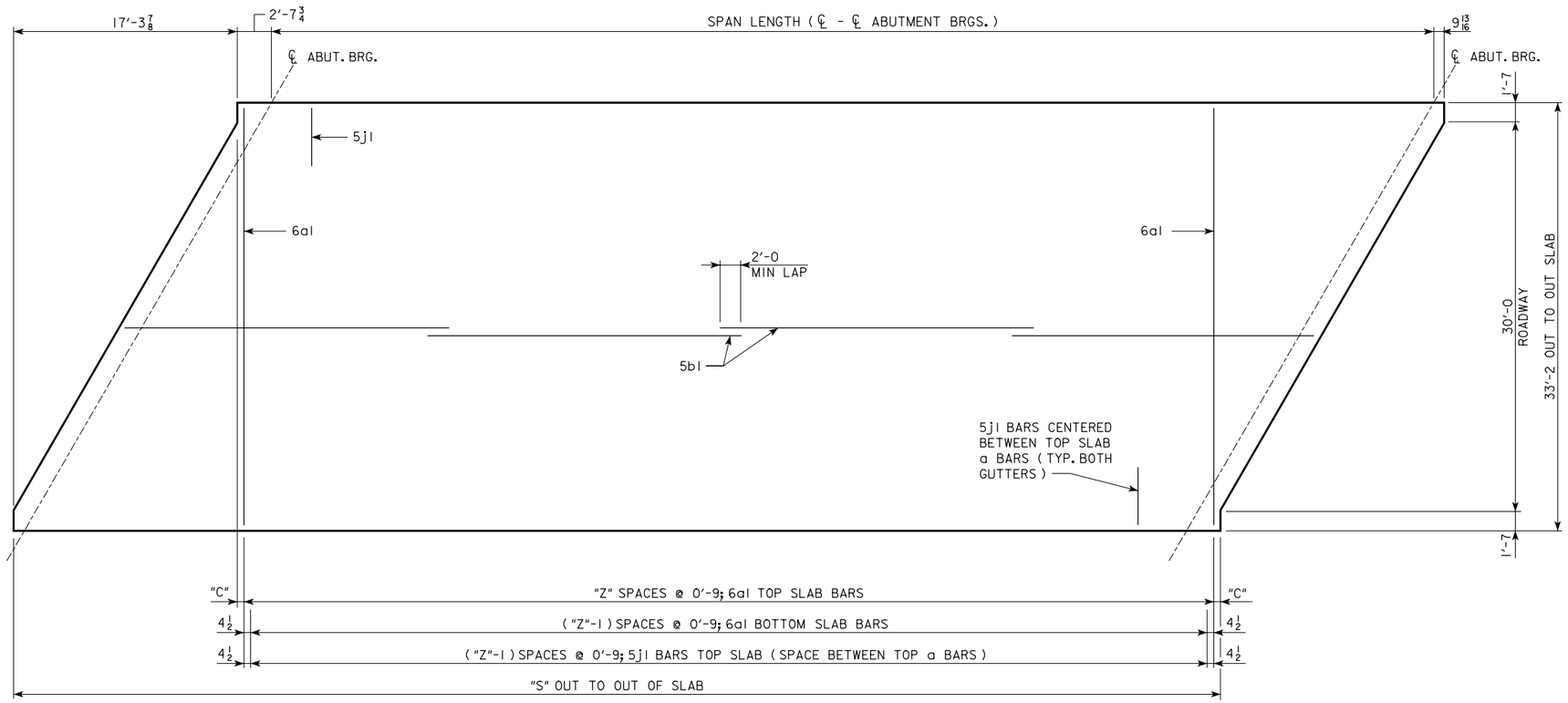

SLAB LAYOUT

(LEFT AHEAD SKEW SHOWN, RIGHT AHEAD SKEW SIMILAR)

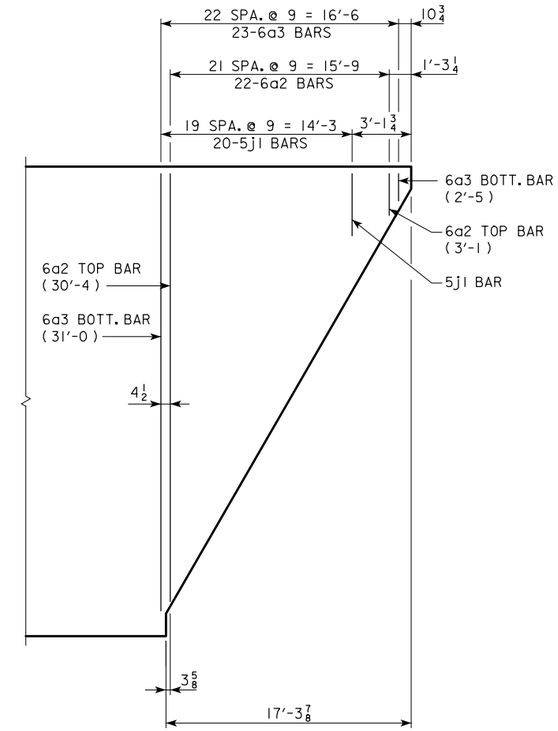

END OF SLAB REINFORCING

(TYPICAL EACH END OF DECK)

SPAN LENGTH (℄ - ℄ ABUTMENT BRGS.)		46'-8	55'-0	67'-6	80'-0	90'-0	100'-0	110'-0
LOCATION OF EXTREME 6a1 TOP BAR FROM END OF SLAB	"C"	3 3/8	3 7/8	2 3/8	5 3/8	2 3/8	3 7/8	5 3/8
NO. OF SPACES FOR 6a1 TOP BARS	"Z"	43	54	71	87	101	114	127
OUT TO OUT OF SLAB	"S"	50'-1 9/16	58'-5 9/16	70'-11 9/16	83'-5 9/16	93'-5 9/16	103'-5 9/16	113'-5 9/16
VERTICAL CURVE TOP OF SLAB TO ABUTMENT TOP AT ℄ ABUTMENT BEARING	"U"	3'-7 11/16	3'-7 11/16	4'-2 11/16	4'-8 11/16	5'-5 5/16	5'-5 7/8	5'-5 13/16
STRAIGHT GRADE TOP OF SLAB TO ABUTMENT TOP AT ℄ ABUTMENT BEARING	"U"	3'-7 7/8	3'-7 7/8	4'-3 1/16	4'-9 1/8	5'-5 7/8	5'-6 5/8	5'-6 11/16
D.L. ABUTMENT REACTION (D.L. + F.W.S.)	KIPS	298.2	338.1	406.3	453.9	523.7	564.9	605.9
L.L. ABUTMENT REACTION (HS20-44) NO IMPACT	KIPS	115.2	119.6	124.2	127.2	129.0	130.6	131.8

LATEST REVISION DATE :

APPROVED BY

STANDARD DESIGN - 30' ROADWAY, SINGLE SPAN BRIDGE

PRETENSIONED PRESTRESSED CONCRETE BEAM BRIDGES

JANUARY, 2005

HS20-44 LOADING

IOWA DEPARTMENT OF TRANSPORTATION - HIGHWAY DIVISION

SUPERSTRUCTURE

30° SKEW

H30SI-21-05

REINFORCING BAR LIST

ONE SUPERSTRUCTURE AND TWO ABUTMENTS

BRIDGE LENGTH

BAR	LOCATION	SHAPE	46′-8 LXA NO.	46′-8 LXA LENGTH	46′-8 LXA WEIGHT	55′-0 LXA NO.	55′-0 LXA LENGTH	55′-0 LXA WEIGHT	67′-6 LXB NO.	67′-6 LXB LENGTH	67′-6 LXB WEIGHT	80′-0 LXC NO.	80′-0 LXC LENGTH	80′-0 LXC WEIGHT	90′-0 LXD NO.	90′-0 LXD LENGTH	90′-0 LXD WEIGHT	100′-0 LXD NO.	100′-0 LXD LENGTH	100′-0 LXD WEIGHT	110′-0 LXD NO.	110′-0 LXD LENGTH	110′-0 LXD WEIGHT
6a1	SLAB TRANSVERSE, TOP & BOTTOM		87	32′-10	4291	109	32′-10	5376	143	32′-10	7053	175	32′-10	8631	203	32′-10	10,012	229	32′-10	11,294	255	32′-10	12,576
6a2	SLAB TRANSVERSE END, TOP		44	*	1105	44	*	1105	44	*	1105	44	*	1105	44	*	1105	44	*	1105	44	*	1105
6a3	SLAB TRANSVERSE END, BOTTOM		46	**	1155	46	**	1155	46	**	1155	46	**	1155	46	**	1155	46	**	1155	46	**	1155
5b1	SLAB LONGITUDINAL TOP & BOTTOM		168	25′-11	4542	168	30′-1	5272	168	36′-4	6367	252	29′-1	7645	252	32′-5	8521	252	35′-9	9397	252	39′-1	10,273
5d2	ABUTMENT DIAPHRAGM, LONGITUDINAL - F.F.		24	7′-2	180	24	6′-11	174	24	6′-11	174	24	6′-11	174	24	7′-1	178	24	7′-1	178	24	7′-1	178
5d3	ABUTMENT DIAPHRAGM, LONGITUDINAL - F.F.		8	6′-3	53	8	6′-0	51	8	6′-0	51	8	6′-0	51	8	5′-10	49	8	5′-10	49	8	5′-10	49
5d5	ABUTMENT DIAPHRAGM, LONGITUDINAL - END		12	5′-0	63	12	5′-0	63	12	5′-0	63	12	5′-0	63	12	5′-0	63	12	5′-0	63	12	5′-0	63
5d6	ABUTMENT DIAPHRAGM LONGITUDINAL - B.F.		8	37′-5	313	8	37′-5	313	8	37′-5	313	8	37′-5	313	8	37′-5	313	8	37′-5	313	8	37′-5	313
5d7	PAVING NOTCH, LONGITUDINAL		4	33′-2	139	4	33′-2	139	4	33′-2	139	4	37′-10	158	4	37′-10	158	4	37′-10	158	4	37′-10	158
5d8	ABUTMENT DIAPH. WING EXT. LONGIT.		-	-	-	-	-	-	-	-	-	48	10′-10	543	48	10′-10	543	48	10′-10	543	48	10′-10	543
8f1	ABUTMENT FOOTING LONGITUDINAL - B.F.		8	37′-5	800	8	37′-5	800	8	37′-5	800	8	37′-5	800	8	37′-5	800	8	37′-5	800	8	37′-5	800
8f2	ABUTMENT FOOTING LONGITUDINAL - F.F.		10	37′-5	1000	10	37′-5	1000	10	37′-5	1000	10	37′-5	1000	10	37′-5	1000	10	37′-5	1000	10	37′-5	1000
8f3	ABUTMENT EXTENSION LONGITUDINAL		-	-	-	-	-	-	-	-	-	16	10′-7	453	16	10′-7	453	16	10′-7	453	16	10′-7	453
8f4	ABUTMENT EXTENSION LONGITUDINAL		-	-	-	-	-	-	-	-	-	16	9′-6	406	16	9′-6	406	16	9′-6	406	16	9′-6	406
8g1	ABUTMENT VERTICAL - B.F.		62	6′-7	1090	62	6′-7	1090	62	7′-2	1187	58	7′-8	1188	58	8′-5	1304	58	8′-5	1304	58	8′-5	1304
8g2	ABUTMENT VERTICAL - F.F.		52	5′-6	764	52	5′-6	764	52	6′-1	845	52	6′-7	915	52	7′-4	1019	52	7′-4	1019	52	7′-4	1019
8g3	ABUTMENT DIAPHRAGM VERTICAL - B.F.		50	15′-3	2036	50	15′-3	2036	50	15′-3	2036	50	15′-9	2103	50	15′-9	2103	50	15′-9	2103	50	15′-9	2103
6g4	ABUT. DIAPH. WING EXT. VERT.		-	-	-	-	-	-	-	-	-	40	5′-8	341	40	6′-5	386	40	6′-5	386	40	6′-5	386
5j1	SLAB TRANSV. TOP AT RAIL		126	6′-3	822	148	6′-3	965	182	6′-3	1187	214	6′-3	1396	242	6′-3	1578	268	6′-3	1748	294	6′-3	1917
5h1	ABUT. WING HORIZONTAL		56	6′-8	390	56	6′-8	390	56	6′-8	390	56	6′-8	390	56	6′-8	390	56	6′-8	390	56	6′-8	390
5h2	ABUTMENT TO WING ANCHOR		56	4′-0	234	56	4′-0	234	56	4′-0	234	8	4′-0	34	8	4′-0	34	8	4′-0	34	8	4′-0	34
5k1	PAVING NOTCH, TRANSVERSE		52	4′-11	267	52	4′-11	267	52	4′-11	267	52	4′-11	267	52	4′-11	267	52	4′-11	267	52	4′-11	267
5k2	PAVING NOTCH, TRANSVERSE		52	3′-5	186	52	3′-5	186	52	3′-5	186	52	3′-5	186	52	3′-5	186	52	3′-5	186	52	3′-5	186
5p1	ABUTMENT HOOPS		120	10′-6	1315	120	10′-6	1315	112	10′-6	1227	112	10′-6	1227	128	10′-6	1402	108	10′-6	1183	108	10′-6	1183
5p2	ABUTMENT EXT.HOOPS		-	-	-	-	-	-	-	-	-	24	10′-8	268	24	10′-8	268	24	10′-8	268	24	10′-8	268
6p3	ABUT. BOTT. AT PILES		-	-	-	-	-	-	-	-	-	32	6′-8	321	36	6′-8	361	40	6′-8	401	40	6′-8	401
5p4	ABUTMENT HOOPS AT ENDS		8	11′-6	96	8	11′-6	96	8	11′-6	96	8	11′-6	96	8	11′-6	96	8	11′-6	96	8	11′-6	96
5r1	PAVING BLOCK LIFTING HOOPS		8	2′-10	24	8	2′-10	24	8	2′-10	24	8	2′-10	24	8	2′-10	24	8	2′-10	24	8	2′-10	24
5s1	WING, VERTICAL		56	VARIES	263	56	VARIES	263	56	VARIES	263	56	VARIES	263	56	VARIES	263	56	VARIES	263	56	VARIES	263
4t1	UNDER BEAMS AT ABUTMENTS		10	4′-11	33	10	4′-11	33	10	4′-11	33	10	4′-11	33	10	5′-1	34	10	5′-1	34	10	5′-1	34
#2	PILE SPIRAL - NO. 2 BAR		12	38′-6	77	14	38′-6	90	16	38′-6	103	20	38′-6	128	22	38′-6	141	24	38′-6	154	24	38′-6	154
	SPIRAL SPACER L $\frac{7}{8}$×$\frac{7}{8}$×$\frac{1}{8}$× 0.70		24	1′-10	32	28	1′-10	37	32	1′-10	42	40	1′-10	52	44	1′-10	58	48	1′-10	63	48	1′-10	63
	REINFORCING STEEL (LBS.)				21,270			23,238			26,340			31,729			34,670			36,837			39,164
	SEE BARRIER RAIL DETAILS (LBS.)				3870			4226			4784			5809			6245			6682			7160
	SEE OPEN RAIL DETAILS (LBS.)				4215			4734			5444			7095			7691			8240			8752

* VARIES FROM 3′-1 TO 30′-4 ** VARIES FROM 2′-5 TO 31′-0

CONCRETE PLACEMENT QUANTITIES
(SUPERSTRUCTURE PLUS INTEGRAL ABUTMENTS)

			46′-8	55′-0	67′-6	80′-0	90′-0	100′-0	110′-0
SLAB, AND ABUT. DIAPHRAGM	WITH BARRIER RAIL	CU.YD.	71.3	78.0	92.8	112.8	128.8	137.6	146.2
	WITH OPEN RAIL	CU.YD.	72.7	79.7	94.9	115.3	131.6	140.7	149.6
PAVING BLOCKS		CU.YD.	1.7	1.7	1.7	1.7	1.7	1.7	1.7
ABUTMENT WINGS		CU.YD.	6.9	6.9	6.9	6.9	6.9	6.9	6.9
ABUTMENT FOOTINGS		CU.YD.	30.7	30.7	30.7	38.5	38.5	38.5	38.5

ESTIMATED QUANTITIES
(SUPERSTRUCTURE PLUS INTEGRAL ABUTMENTS)

			46′-8	55′-0	67′-6	80′-0	90′-0	100′-0	110′-0
NO. OF STEEL H-PILES FOR TWO ABUTS. (HP10X42)		NO.	12	14	16	20	22	24	24
STRUCTURAL CONCRETE, (BRIDGE)	WITH BARRIER RAIL	CU.YD.	110.6	117.3	132.1	159.9	175.9	184.7	193.3
	WITH OPEN RAIL	CU.YD.	112.0	119.0	134.2	162.4	178.7	187.8	196.7
CONCRETE RAIL (BARRIER OR OPEN)		L.F.	128.3	144.9	169.9	214.9	234.9	254.9	274.9
REINFORCING STEEL	WITH BARRIER RAIL	LBS.	25,140	27,464	31,124	37,538	40,915	43,519	46,324
	WITH OPEN RAIL	LBS.	25,485	27,972	31,784	38,824	42,361	45,077	47,916
STRUCTURAL STEEL	WITH BARRIER RAIL	LBS.	1532	1526	1570	1610	1695	1695	1695
	WITH OPEN RAIL	LBS.	1242	1235	1235	1235	1265	1265	1265

BENT BAR DETAILS

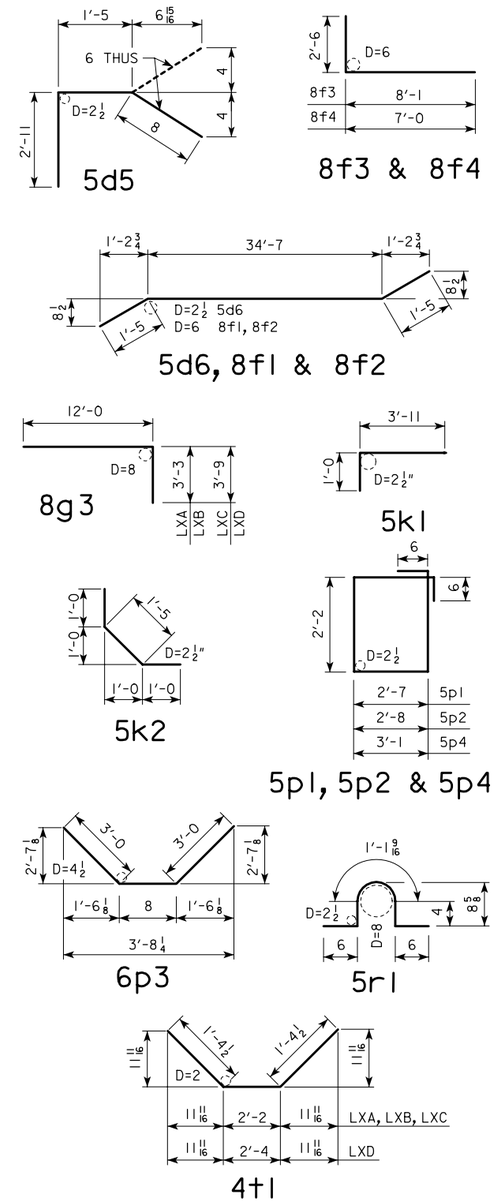

NOTE: ALL DIMENSIONS ARE OUT TO OUT. D= PIN DIAMETER

LATEST REVISION DATE :

APPROVED BY

STANDARD DESIGN - 30′ ROADWAY, SINGLE SPAN BRIDGE

PRETENSIONED PRESTRESSED CONCRETE BEAM BRIDGES

JANUARY, 2005 HS20-44 LOADING

IOWA DEPARTMENT OF TRANSPORTATION - HIGHWAY DIVISION

DECK & ABUTMENT REINF. 30 SKEW

H30SI-22-05

EPOXY COATED REINFORCING BAR LIST

ONE SUPERSTRUCTURE AND TWO ABUTMENTS

BRIDGE LENGTH

BAR	LOCATION	SHAPE	46'-8 LXA NO.	46'-8 LXA LENGTH	46'-8 LXA WEIGHT	55'-0 LXA NO.	55'-0 LXA LENGTH	55'-0 LXA WEIGHT	67'-6 LXB NO.	67'-6 LXB LENGTH	67'-6 LXB WEIGHT	80'-0 LXC NO.	80'-0 LXC LENGTH	80'-0 LXC WEIGHT	90'-0 LXD NO.	90'-0 LXD LENGTH	90'-0 LXD WEIGHT	100'-0 LXD NO.	100'-0 LXD LENGTH	100'-0 LXD WEIGHT	110'-0 LXD NO.	110'-0 LXD LENGTH	110'-0 LXD WEIGHT
6a1	SLAB TRANSVERSE, TOP & BOTTOM		87	32'-10	4291	109	32'-10	5376	143	32'-10	7053	175	32'-10	8631	203	32'-10	10,012	229	32'-10	11,294	255	32'-10	12,576
6a2	SLAB TRANSVERSE END, TOP		44	*	1105	44	*	1105	44	*	1105	44	*	1105	44	*	1105	44	*	1105	44	*	1105
6a3	SLAB TRANSVERSE END, BOTTOM		46	**	1155	46	**	1155	46	**	1155	46	**	1155	46	**	1155	46	**	1155	46	**	1155
5b1	SLAB LONGITUDINAL TOP & BOTTOM		168	25'-11	4542	168	30'-1	5272	168	36'-4	6367	252	29'-1	7645	252	32'-5	8521	252	35'-9	9397	252	39'-1	10,273
5d6	ABUTMENT DIAPHRAGM LONGITUDINAL - B.F.		8	37'-5	313	8	37'-5	313	8	37'-5	313	8	37'-5	313	8	37'-5	313	8	37'-5	313	8	37'-5	313
5d7	PAVING NOTCH, LONGITUDINAL		4	33'-2	139	4	33'-2	139	4	33'-2	139	4	37'-10	158	4	37'-10	158	4	37'-10	158	4	37'-10	158
8f1	ABUTMENT FOOTING LONGITUDINAL - B.F.		8	37'-5	800	8	37'-5	800	8	37'-5	800	8	37'-5	800	8	37'-5	800	8	37'-5	800	8	37'-5	800
8g1	ABUTMENT VERTICAL - B.F.		62	6'-7	1090	62	6'-7	1090	62	7'-2	1187	58	7'-8	1188	58	8'-5	1304	58	8'-5	1304	58	8'-5	1304
8g3	ABUTMENT DIAPHRAGM VERTICAL - B.F.		50	15'-3	2036	50	15'-3	2036	50	15'-3	2036	50	15'-9	2103	50	15'-9	2103	50	15'-9	2103	50	15'-9	2103
5j1	SLAB TRANSV. TOP AT RAIL		126	6'-3	822	148	6'-3	965	182	6'-3	1187	214	6'-3	1396	242	6'-3	1578	268	6'-3	1748	294	6'-3	1917
5k1	PAVING NOTCH, TRANSVERSE		52	4'-11	267	52	4'-11	267	52	4'-11	267	52	4'-11	267	52	4'-11	267	52	4'-11	267	52	4'-11	267
5k2	PAVING NOTCH, TRANSVERSE		52	3'-5	186	52	3'-5	186	52	3'-5	186	52	3'-5	186	52	3'-5	186	52	3'-5	186	52	3'-5	186
5p1	ABUTMENT HOOPS		120	10'-6	1315	120	10'-6	1315	112	10'-6	1227	112	10'-6	1227	128	10'-6	1402	108	10'-6	1183	108	10'-6	1183
6p3	ABUT. BOTT. AT PILES		-	-	-	-	-	-	-	-	-	32	6'-8	321	36	6'-8	361	40	6'-8	401	40	6'-8	401
5p4	ABUTMENT HOOPS AT ENDS		8	11'-6	96	8	11'-6	96	8	11'-6	96	8	11'-6	96	8	11'-6	96	8	11'-6	96	8	11'-6	96
	REINFORCING STEEL - EPOXY COATED (LBS.)				18,157			20,115			23,118			26,591			29,361			31,510			33,837
	SEE BARRIER RAIL DETAILS (LBS.)				3870			4226			4784			5809			6245			6682			7160
	SEE OPEN RAIL DETAILS (LBS.)				4215			4734			5444			7095			7691			8240			8752

NON-EPOXY COATED REINFORCING BAR LIST

ONE SUPERSTRUCTURE AND TWO ABUTMENTS

BRIDGE LENGTH

BAR	LOCATION	SHAPE	46'-8 LXA NO.	46'-8 LXA LENGTH	46'-8 LXA WEIGHT	55'-0 LXA NO.	55'-0 LXA LENGTH	55'-0 LXA WEIGHT	67'-6 LXB NO.	67'-6 LXB LENGTH	67'-6 LXB WEIGHT	80'-0 LXC NO.	80'-0 LXC LENGTH	80'-0 LXC WEIGHT	90'-0 LXD NO.	90'-0 LXD LENGTH	90'-0 LXD WEIGHT	100'-0 LXD NO.	100'-0 LXD LENGTH	100'-0 LXD WEIGHT	110'-0 LXD NO.	110'-0 LXD LENGTH	110'-0 LXD WEIGHT
5d2	ABUTMENT DIAPHRAGM, LONGITUDINAL - F.F.		24	7'-2	180	24	6'-11	174	24	6'-11	174	24	6'-11	174	24	7'-1	178	24	7'-1	178	24	7'-1	178
5d3	ABUTMENT DIAPHRAGM, LONGITUDINAL - F.F.		8	6'-3	53	8	6'-0	51	8	6'-0	51	8	6'-0	51	8	5'-10	49	8	5'-10	49	8	5'-10	49
5d5	ABUTMENT DIAPHRAGM, LONGITUDINAL - END		12	5'-0	63	12	5'-0	63	12	5'-0	63	12	5'-0	63	12	5'-0	63	12	5'-0	63	12	5'-0	63
5d8	ABUTMENT DIAPH. WING EXT. LONGIT.		-	-	-	-	-	-	-	-	-	48	10'-10	543	48	10'-10	543	48	10'-10	543	48	10'-10	543
8f2	ABUTMENT FOOTING LONGITUDINAL - F.F.		10	37'-5	1000	10	37'-5	1000	10	37'-5	1000	10	37'-5	1000	10	37'-5	1000	10	37'-5	1000	10	37'-5	1000
8f3	ABUTMENT EXTENSION LONGITUDINAL		-	-	-	-	-	-	-	-	-	16	10'-7	453	16	10'-7	453	16	10'-7	453	16	10'-7	453
8f4	ABUTMENT EXTENSION LONGITUDINAL		-	-	-	-	-	-	-	-	-	16	9'-6	406	16	9'-6	406	16	9'-6	406	16	9'-6	406
8g2	ABUTMENT VERTICAL - F.F.		52	5'-6	764	52	5'-6	764	52	6'-1	845	52	6'-7	915	52	7'-4	1019	52	7'-4	1019	52	7'-4	1019
6g4	ABUT. DIAPH. WING EXT. VERT.		-	-	-	-	-	-	-	-	-	40	5'-8	341	40	6'-5	386	40	6'-5	386	40	6'-5	386
5h1	ABUT. WING HORIZONTAL		56	6'-8	390	56	6'-8	390	56	6'-8	390	56	6'-8	390	56	6'-8	390	56	6'-8	390	56	6'-8	390
5h2	ABUTMENT TO WING ANCHOR		56	4'-0	234	56	4'-0	234	56	4'-0	234	8	4'-0	34	8	4'-0	34	8	4'-0	34	8	4'-0	34
5p2	ABUT. EXTENSION HOOPS		-	-	-	-	-	-	-	-	-	24	10'-8	268	24	10'-8	268	24	10'-8	268	24	10'-8	268
5r1	PAVING BLOCK LIFTING HOOPS		8	2'-10	24	8	2'-10	24	8	2'-10	24	8	2'-10	24	8	2'-10	24	8	2'-10	24	8	2'-10	24
5s1	WING, VERTICAL		56	VARIES	263	56	VARIES	263	56	VARIES	263	56	VARIES	263	56	VARIES	263	56	VARIES	263	56	VARIES	263
4t1	UNDER BEAMS AT ABUTMENTS		10	4'-11	33	10	4'-11	33	10	4'-11	33	10	4'-11	33	10	5'-1	34	10	5'-1	34	10	5'-1	34
#2	PILE SPIRAL - NO. 2 BAR		12	38'-6	77	14	38'-6	90	16	38'-6	103	20	38'-6	128	22	38'-6	141	24	38'-6	154	24	38'-6	154
	SPIRAL SPACER L $\frac{7}{8}\times\frac{7}{8}\times\frac{1}{8}\times$ 0.70		24	1'-10	32	28	1'-10	37	32	1'-10	42	40	1'-10	52	44	1'-10	58	48	1'-10	63	48	1'-10	63
* VARIES FROM 3'-1 TO 30'-4 ** VARIES FROM 2'-5 TO 31'-0																							
	REINFORCING STEEL - NON-EPOXY COATED (LBS.)				3113			3123			3222			5138			5309			5327			5327

CONCRETE PLACEMENT QUANTITIES

(SUPERSTRUCTURE PLUS INTEGRAL ABUTMENTS)

			46'-8	55'-0	67'-6	80'-0	90'-0	100'-0	110'-0
SLAB, AND ABUT. DIAPHRAGM	WITH BARRIER RAIL	CU.YD.	71.3	78.0	92.8	112.8	128.8	137.6	146.2
	WITH OPEN RAIL	CU.YD.	72.7	79.7	94.9	115.3	131.6	140.7	149.6
PAVING BLOCKS		CU.YD.	1.7	1.7	1.7	1.7	1.7	1.7	1.7
ABUTMENT WINGS		CU.YD.	6.9	6.9	6.9	6.9	6.9	6.9	6.9
ABUTMENT FOOTINGS		CU.YD.	30.7	30.7	30.7	38.5	38.5	38.5	38.5

ESTIMATED QUANTITIES

(SUPERSTRUCTURE PLUS INTEGRAL ABUTMENTS)

			46'-8	55'-0	67'-6	80'-0	90'-0	100'-0	110'-0
NO. OF STEEL H-PILES FOR TWO ABUTS. (HP10X42)		NO.	12	14	16	20	22	24	24
STRUCTURAL CONCRETE, (BRIDGE)	WITH BARRIER RAIL	CU.YD.	110.6	117.3	132.1	159.9	175.9	184.7	193.3
	WITH OPEN RAIL	CU.YD.	112.0	119.0	134.2	162.4	178.7	187.8	196.7
CONCRETE RAIL (BARRIER OR OPEN)		L.F.	128.3	144.9	169.9	214.9	234.9	254.9	274.9
REINFORCING STEEL EPOXY COATED	WITH BARRIER RAIL	LBS.	22,027	24,341	27,902	32,400	35,606	38,192	40,997
	WITH OPEN RAIL	LBS.	22,372	24,849	28,562	33,686	37,052	39,750	42,589
REINFORCING STEEL		LBS.	3113	3123	3222	5138	5309	5327	5327
STRUCTURAL STEEL	WITH BARRIER RAIL	LBS.	1532	1526	1570	1610	1695	1695	1695
	WITH OPEN RAIL	LBS.	1242	1235	1235	1235	1265	1265	1265

BENT BAR DETAILS

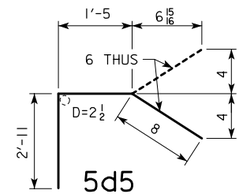

5d5

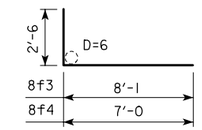

8f3 & 8f4

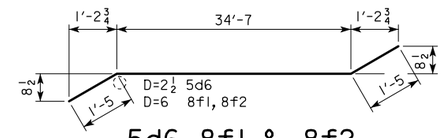

5d6, 8f1 & 8f2

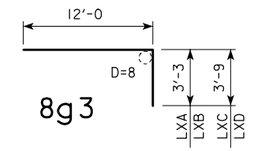

8g3

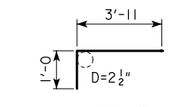

5k2

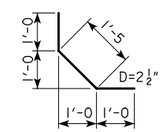

5k3

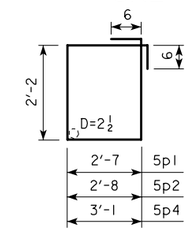

5p1, 5p2 & 5p4

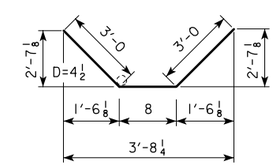

6p3

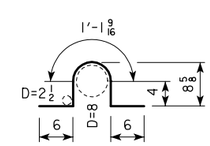

5r1

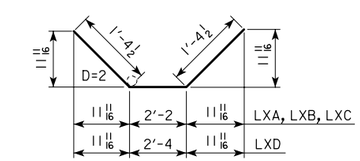

4t1

NOTE: ALL DIMENSIONS ARE OUT TO OUT. D= PIN DIAMETER

LATEST REVISION DATE:

APPROVED BY

STANDARD DESIGN - 30' ROADWAY, SINGLE SPAN BRIDGE

PRETENSIONED PRESTRESSED CONCRETE BEAM BRIDGES

JANUARY, 2005 HS20-44 LOADING

IOWA DEPARTMENT OF TRANSPORTATION - HIGHWAY DIVISION

DECK & ABUTMENT REINF.

30 SKEW

H30SI-23-05 EPOXY

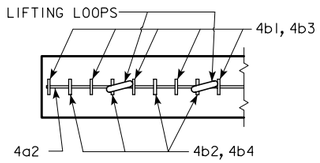

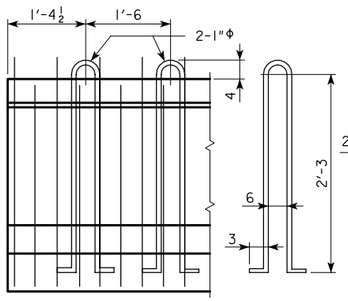

LIFTING LOOP DETAIL

ALTERNATE TYPES MAY BE SUBSTITUTED WITH THE APPROVAL OF THE ENGINEER. LIFTING LOOPS ARE TO BE STRUCTURAL GRADE.

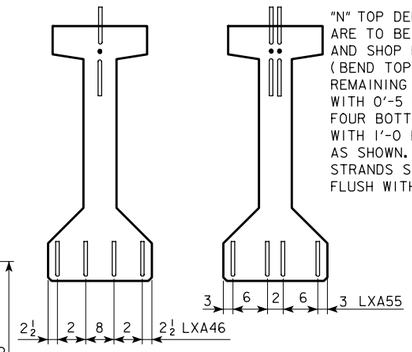

"N" TOP DEFLECTED OR STRAIGHT STRANDS ARE TO BE CUT WITH 1'-0 PROJECTIONS AND SHOP BENT UP OR DOWN AS SHOWN (BEND TOP AND BOTTOM ROWS). THE REMAINING TOP STRANDS ARE TO BE CUT WITH 0'-5 PROJECTIONS.
FOUR BOTTOM STRANDS ARE TO BE CUT WITH 1'-0 PROJECTIONS AND SHOP BENT AS SHOWN. THE REMAINING BOTTOM STRANDS SHALL BE CUT OFF REASONABLY FLUSH WITH THE CONCRETE.

BEAM	"N"
LXA46	2
LXA55	4

STRAND PROJECTION AT BEAM ENDS WHEN EMBEDDED IN CONCRETE END DIAPHRAGMS

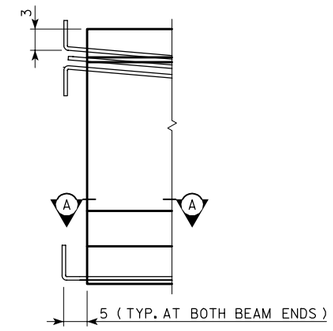

LXA BEAM DATA

BEAM	SPAN LENGTH ℄-℄ BEARING	OVERALL BEAM LENGTH (L)	STRAND SIZE	NO. OF STRANDS		TOTAL INITIAL PRESTRESS ③ KIPS	HOLD DOWN FORCE-KIPS	CAMBER (in.)		DEFLECTION (in.) Δ_D		WEIGHT (TONS)	CONCRETE (C.Y.)	REINFORCING STEEL-(lbs.)
				STRAIGHT	DEFLECTED			AT RELEASE	AFTER LOSSES	IMMEDIATE ① (ELASTIC) Δ_I	TIME ② (PLASTIC) Δ_T			
LXA46	46'-8	47'-8	½"Φ	12	3	450	10.5	0.81	1.44	0.46	0.11	7.7	3.82	449
LXA55	55'-0	56'-0	½"Φ	16	6	681.2	13.6	1.01	1.80	0.72	0.18	11.9	5.87	568

① DEFLECTIONS AT MID-SPAN DUE TO WEIGHT OF SLAB AND STEEL DIAPHRAGM.

② DEFLECTIONS DUE TO THE COMBINED EFFECT OF CREEP DUE TO WEIGHT OF SLAB AND SHRINKAGE OF SLAB.

TOTAL BEAM DEFLECTIONS AT ℄ OF SPAN, Δ_D, DUE TO WEIGHT OF SLAB AND DIAPHRAGMS FOR DETAILING PURPOSE:
$\Delta_D = \Delta_I + \Delta_T$ FOR SIMPLE SPAN.

③ TOTAL INITIAL PRESTRESS FOR LXA46 IS BASED ON 72.664% f's, AND FOR LXA55 ON 75% f's.
f's = 270 ksi AND As = 0.153 sq. in.

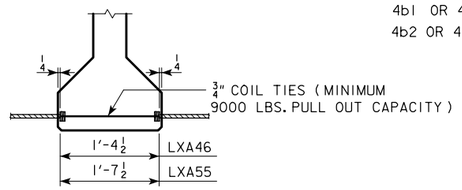

COIL TIE DETAIL

NUMBER AND EXACT LOCATION OF COIL TIES TO BE AS DETAILED ON LONGITUDINAL SECTION SHEETS.

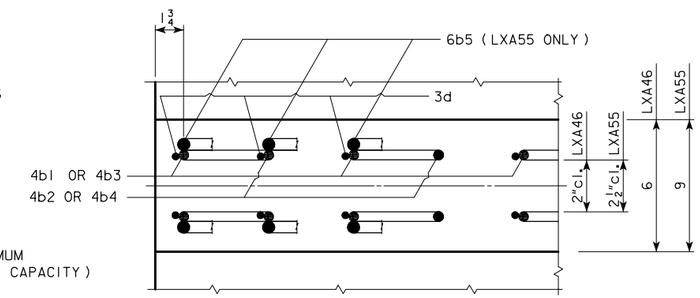

SECTION A-A SHOWING PLACEMENT OF STIRRUPS NEAR END OF BEAM

NOTES:

THESE BEAMS ARE DESIGNED FOR AASHTO HS20 LIVE LOADS WITH AN ALLOWANCE OF 20 lb. PER SQUARE FOOT OF ROADWAY FOR FUTURE WEARING SURFACE.

HOLD DOWN POINTS FOR DEFLECTED STRANDS MAY BE MOVED TOWARD ENDS OF BEAM A DISTANCE OF 0.05 L MAXIMUM AT PRODUCER'S OPTION.

ALL PRESTRESSING STRANDS SHALL CONFORM TO ASTM A416 GRADE 270 LOW RELAXATION STRANDS.

TOPS OF BEAMS ARE TO BE STRUCK OFF LEVEL AND FINISHED AS PER MATERIALS I.M. 570.

BEARINGS SHALL BE AS DETAILED ON OTHER DESIGN SHEETS.

THE PORTIONS OF THE PRESTRESS BEAMS THAT ARE TO BE EMBEDDED IN THE ABUTMENT SHALL BE ROUGHENED FOR A DISTANCE OF 10" FROM THE BEAM END BY SANDBLASTING OR OTHER APPROVED METHODS TO PROVIDE SUITABLE BOND BETWEEN THE BEAM AND THE DIAPHRAGM IN ACCORDANCE WITH ARTICLE 2403.14 OF THE SPECIFICATIONS.

UNLESS OTHERWISE NOTED ALL BEAMS ARE TO BE INCREASED IN LENGTH BY .0005L TO COMPENSATE FOR ELASTIC SHORTENING, CREEP AND SHRINKAGE.

HOLES MUST BE CAST IN THE WEB TO ACCOMMODATE THE STEEL DIAPHRAGM ATTACHMENTS AS DETAILED ON THE STEEL DIAPHRAGM DETAIL SHEET.

½" DIAMETER STRANDS STRESSED TO NOT MORE THAN 3,000 LBS. EACH MAY BE USED IN LIEU OF THE a BARS WHICH RUN THE FULL LENGTH OF THE BEAM IN THE TOP FLANGE.

BEAMS SHALL BE AT LEAST 28 DAYS OLD BEFORE THE SLAB IS PLACED EXCEPT AS OTHERWISE APPROVED BY THE ENGINEER.

SPECIFICATIONS:

CONSTRUCTION:
STANDARD SPECIFICATIONS OF THE IOWA DEPARTMENT OF TRANSPORTATION, CURRENT SERIES, WITH CURRENT APPLICABLE SPECIAL PROVISIONS AND SUPPLEMENTAL SPECIFICATIONS.

DESIGN: A.A.S.H.T.O., SERIES OF 1989, WITH MINOR MODIFICATIONS.

DESIGN STRESSES:

DESIGN STRESSES FOR THE FOLLOWING MATERIALS ARE TO BE IN ACCORDANCE WITH A.A.S.H.T.O. STANDARD SPECIFICATIONS FOR HIGHWAY BRIDGES, SERIES OF 1989:

REINFORCING STEEL IN ACCORDANCE WITH SECTION 8, GRADE 60.

CONCRETE IN ACCORDANCE WITH SECTION 9, f'c = 5000 psi.

PRESTRESSING STEEL IN ACCORDANCE WITH SECTION 9, f's = 270,000 psi.

REINFORCING BAR LIST

	BEAM / SPAN		LXA46 / 46'-8		LXA55 / 55'-0	
	BAR	SHAPE	NO.	LENGTH	NO.	LENGTH
	5a1		4	24'-11	4	29'-1
	4a2		2	3'-3	2	3'3
ΔΔ	4b1		42	6'-8	-	-
	4b2		8	5'-0	-	-
ΔΔ	4b3		-	-	48	6'-8
	4b4		-	-	8	5'-0
	6b5		-	-	12	2'-9
	3c1		42	1'-3	-	-
	3c2		-	-	48	1'-4
*	3d		100	2'-8	112	2'-10
	3e		12	1'-6	14	1'-8

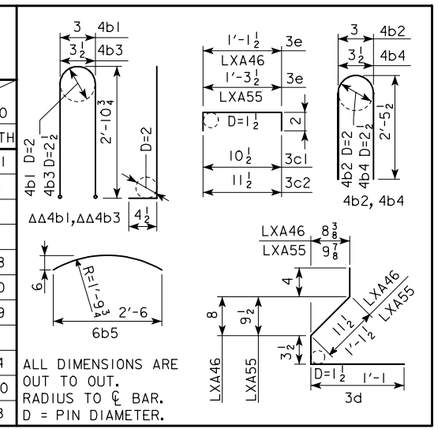

ALL DIMENSIONS ARE OUT TO OUT.
RADIUS TO ℄ BAR.
D = PIN DIAMETER.

ΔΔ 4b1 AND 4b3 BARS TO BE EPOXY COATED.

* WHERE DEFLECTING STRANDS INTERFERE WITH PLACEMENT, SOME IN-PLACE BENDING MAY BE NECESSARY.

LATEST REVISION DATE :

APPROVED BY

STANDARD DESIGN - 30' ROADWAY, SINGLE SPAN BRIDGE

PRETENSIONED PRESTRESSED CONCRETE BEAM BRIDGES

JANUARY, 2005 HS20-44 LOADING

IOWA DEPARTMENT OF TRANSPORTATION - HIGHWAY DIVISION

LXA BEAM DETAILS

H30SI-24-05

NOTE: DIMENSIONS FOR THE LOCATION OF THE DEFLECTED STRANDS ARE AT ℄ BEAM AND END OF BEAM.

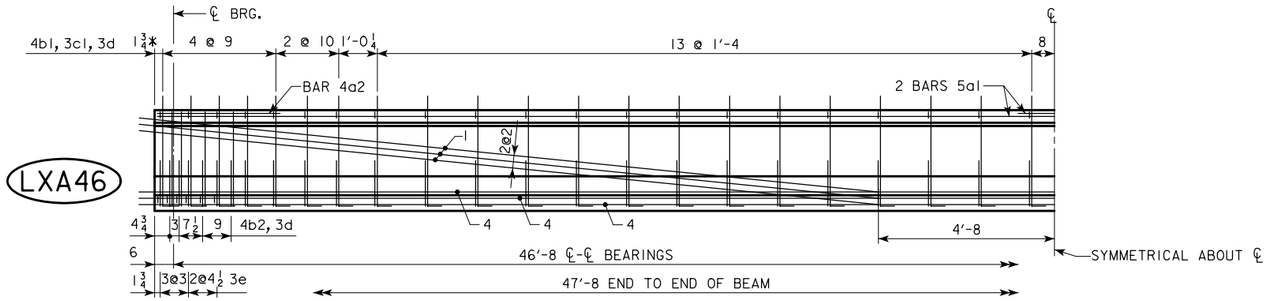

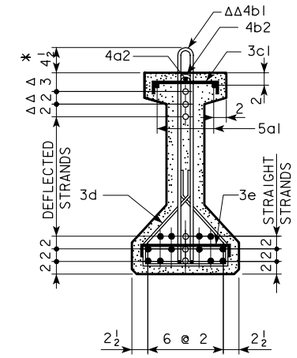

BEAM LXA46

NOTE: BARS 3d ARE TO BE PLACED IN PAIRS.

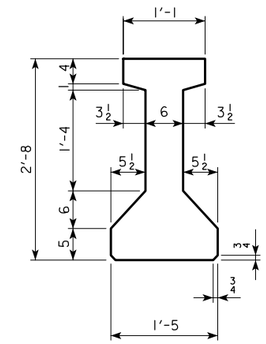

BEAM LXA46

A = 311.5 in.^{2}
Y_b = 14.05 in.
I = 34,082 in.^{4}

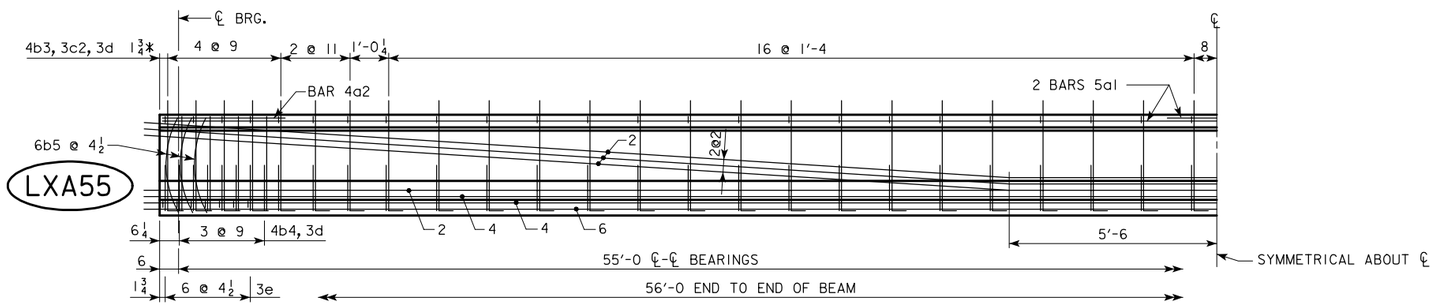

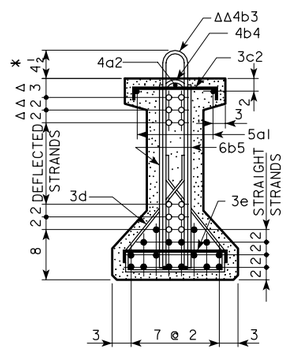

BEAM LXA55

NOTE: BARS 6b5 AND 3d ARE TO BE PLACED IN PAIRS.

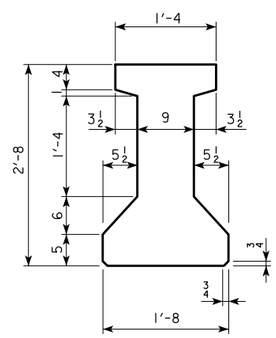

BEAM LXA55

A = 407.5 in.^{2}
Y_b = 14.51 in.
I = 42,552 in.^{4}

○ DEFLECTED STRANDS
✱ KEEP
Δ DIMENSIONS AT END OF BEAM
ΔΔ EPOXY COATED BARS

LATEST REVISION DATE :

APPROVED BY

STANDARD DESIGN - 30' ROADWAY, SINGLE SPAN BRIDGE

PRETENSIONED PRESTRESSED CONCRETE BEAM BRIDGES

JANUARY, 2005 HS20-44 LOADING

IOWA DEPARTMENT OF TRANSPORTATION - HIGHWAY DIVISION

LXA46 - LXA55 BEAM DETAILS | H30SI-25-05

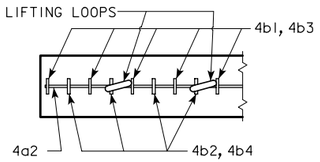

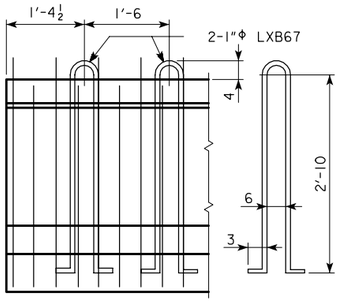

LIFTING LOOP DETAIL

ALTERNATE TYPES MAY BE SUBSTITUTED WITH THE APPROVAL OF THE ENGINEER. LIFTING LOOPS ARE TO BE STRUCTURAL GRADE.

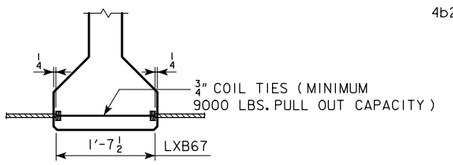

COIL TIE DETAIL

NUMBER AND EXACT LOCATION OF COIL TIES TO BE AS DETAILED ON LONGITUDINAL SECTION SHEETS.

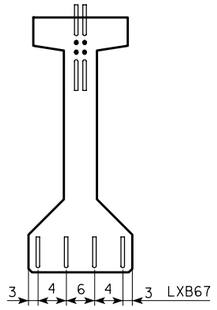

FOUR TOP DEFLECTED OR STRAIGHT STRANDS ARE TO BE CUT WITH 1'-0 PROJECTIONS AND SHOP BENT UP OR DOWN AS SHOWN (BEND TOP AND BOTTOM ROWS). THE REMAINING TOP STRANDS ARE TO BE CUT WITH 0'-5 PROJECTIONS.
FOUR BOTTOM STRANDS ARE TO BE CUT WITH 1'-0 PROJECTIONS AND SHOP BENT AS SHOWN. THE REMAINING BOTTOM STRANDS SHALL BE CUT OFF REASONABLY FLUSH WITH THE CONCRETE.

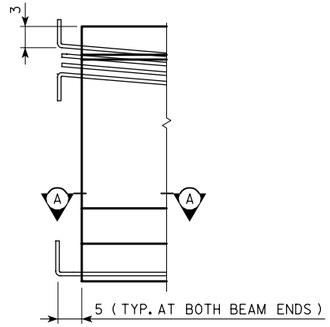

STRAND PROJECTION AT BEAM ENDS WHEN EMBEDDED IN CONCRETE END DIAPHRAGMS

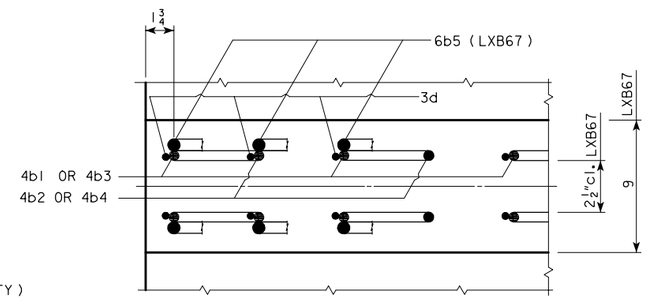

SECTION A-A SHOWING PLACEMENT OF STIRRUPS NEAR END OF BEAM

LXB BEAM DATA

BEAM	SPAN LENGTH ℄-℄ BEARING	OVERALL BEAM LENGTH (L)	STRAND SIZE	NO. OF STRANDS		TOTAL INITIAL PRESTRESS ③ KIPS	HOLD DOWN FORCE-KIPS	CAMBER (in.)		DEFLECTION (in.) Δ_D		WEIGHT (TONS)	CONCRETE (C.Y.)	REINFORCING STEEL-(lbs.)
				STRAIGHT	DEFLECTED			AT RELEASE	AFTER LOSSES	IMMEDIATE ① (ELASTIC) Δ_I	TIME ② (PLASTIC) Δ_T			
LXB67	67'-6	68'-6	½"Φ	18	8	805.1	22.6	1.23	2.17	0.89	0.23	17.8	8.80	757

① DEFLECTIONS AT MID-SPAN DUE TO WEIGHT OF SLAB AND STEEL DIAPHRAGM.

② DEFLECTIONS DUE TO THE COMBINED EFFECT OF CREEP DUE TO WEIGHT OF SLAB AND SHRINKAGE OF SLAB.

TOTAL BEAM DEFLECTIONS AT ℄ OF SPAN, Δ_D, DUE TO WEIGHT OF SLAB AND DIAPHRAGMS FOR DETAILING PURPOSE:
$\Delta_D = \Delta_I + \Delta_T$ FOR SIMPLE SPAN.

③ TOTAL INITIAL PRESTRESS FOR LXB67 IS BASED ON 75% f's.
f's = 270 ksi AND As = 0.153 sq. in.

NOTES:

THESE BEAMS ARE DESIGNED FOR AASHTO HS20 LIVE LOADS WITH AN ALLOWANCE OF 20 lb. PER SQUARE FOOT OF ROADWAY FOR FUTURE WEARING SURFACE.

HOLD DOWN POINTS FOR DEFLECTED STRANDS MAY BE MOVED TOWARD ENDS OF BEAM A DISTANCE OF 0.05 L MAXIMUM AT PRODUCER'S OPTION.

ALL PRESTRESSING STRANDS SHALL CONFORM TO ASTM A416 GRADE 270 LOW RELAXATION STRANDS.

TOPS OF BEAMS ARE TO BE STRUCK OFF LEVEL AND FINISHED AS PER MATERIALS I.M. 570.

BEARINGS SHALL BE AS DETAILED ON OTHER DESIGN SHEETS.

THE PORTIONS OF THE PRESTRESS BEAMS THAT ARE TO BE EMBEDDED IN THE ABUTMENT SHALL BE ROUGHENED FOR A DISTANCE OF 10" FROM THE BEAM END BY SANDBLASTING OR OTHER APPROVED METHODS TO PROVIDE SUITABLE BOND BETWEEN THE BEAM AND THE DIAPHRAGM IN ACCORDANCE WITH ARTICLE 2403.14 OF THE SPECIFICATIONS.

UNLESS OTHERWISE NOTED ALL BEAMS ARE TO BE INCREASED IN LENGTH BY .0005L TO COMPENSATE FOR ELASTIC SHORTENING, CREEP AND SHRINKAGE.

HOLES MUST BE CAST IN THE WEB TO ACCOMMODATE THE STEEL DIAPHRAGM ATTACHMENTS AS DETAILED ON THE STEEL DIAPHRAGM DETAIL SHEET.

½" DIAMETER STRANDS STRESSED TO NOT MORE THAN 3,000 LBS. EACH MAY BE USED IN LIEU OF THE a BARS WHICH RUN THE FULL LENGTH OF THE BEAM IN THE TOP FLANGE.

BEAMS SHALL BE AT LEAST 28 DAYS OLD BEFORE THE SLAB IS PLACED EXCEPT AS OTHERWISE APPROVED BY THE ENGINEER.

DESIGN STRESSES:

DESIGN STRESSES FOR THE FOLLOWING MATERIALS ARE TO BE IN ACCORDANCE WITH A.A.S.H.T.O. STANDARD SPECIFICATIONS FOR HIGHWAY BRIDGES, SERIES OF 1989:

REINFORCING STEEL IN ACCORDANCE WITH SECTION 8, GRADE 60.

CONCRETE IN ACCORDANCE WITH SECTION 9, f'c = 5000 psi.

PRESTRESSING STEEL IN ACCORDANCE WITH SECTION 9, f's = 270,000 psi.

SPECIFICATIONS:

CONSTRUCTION:
STANDARD SPECIFICATIONS OF THE IOWA DEPARTMENT OF TRANSPORTATION, CURRENT SERIES, WITH CURRENT APPLICABLE SPECIAL PROVISIONS AND SUPPLEMENTAL SPECIFICATIONS.

DESIGN: A.A.S.H.T.O., SERIES OF 1989, WITH MINOR MODIFICATIONS.

REINFORCING BAR LIST

	BAR	SHAPE	BEAM / SPAN: LXB67 67'-6 NO.	LENGTH
	6a1		4	35'-7
	4a2		2	3'-3
ΔΔ	4b1		-	-
	4b2		-	-
ΔΔ	4b3		52	7'-10
	4b4		8	6'-2
	6b5		12	3'-3
	3c1		-	-
	3c2		52	1'-6
*	3d		120	3'-0
	3e		16	1'-10

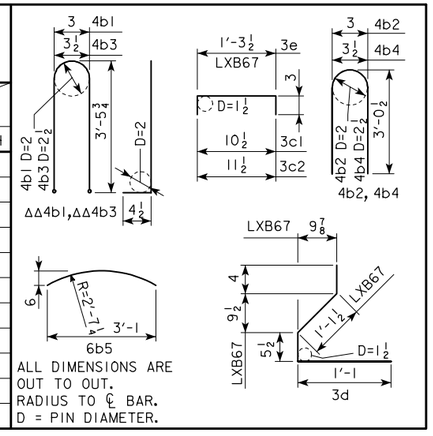

ALL DIMENSIONS ARE OUT TO OUT.
RADIUS TO ℄ BAR.
D = PIN DIAMETER.

ΔΔ 4b1 AND 4b3 BARS TO BE EPOXY COATED.

* WHERE DEFLECTING STRANDS INTERFERE WITH PLACEMENT, SOME IN-PLACE BENDING MAY BE NECESSARY.

LATEST REVISION DATE :

APPROVED BY

STANDARD DESIGN - 30' ROADWAY, SINGLE SPAN BRIDGE

PRETENSIONED PRESTRESSED CONCRETE BEAM BRIDGES

JANUARY, 2005 HS20-44 LOADING

IOWA DEPARTMENT OF TRANSPORTATION - HIGHWAY DIVISION

LXB BEAM DETAILS

H30SI-26-05

NOTE: DIMENSIONS FOR THE LOCATION OF THE DEFLECTED STRANDS ARE AT ℄ BEAM AND END OF BEAM.

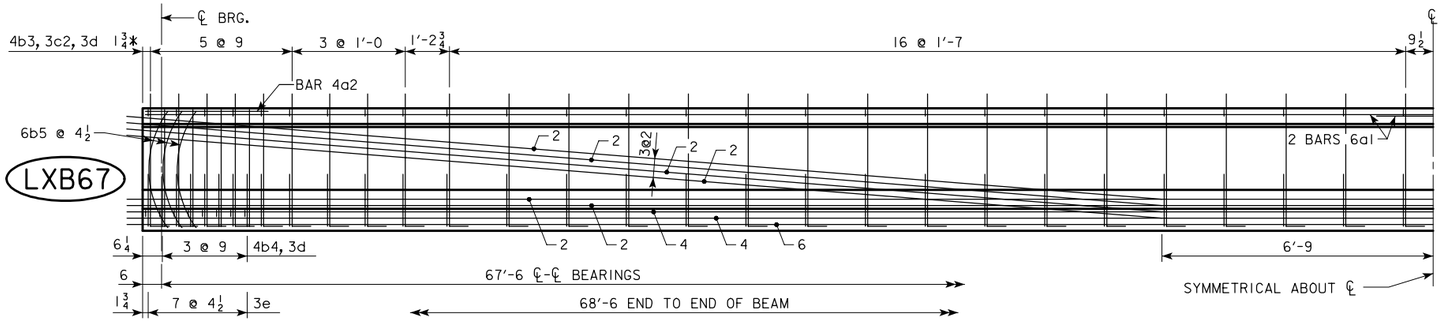

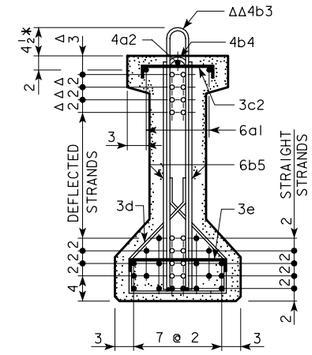

BEAM LXB67

○ DEFLECTED STRANDS
* KEEP
Δ DIMENSIONS AT END OF BEAM
ΔΔ EPOXY COATED BARS

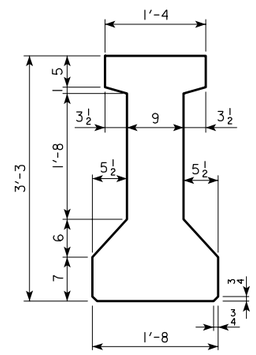

BEAM LXB67

A = 499.5 in.^{2}
Y_b = 17.63 in.
I = 77,364 in.^{4}

LATEST REVISION DATE :

APPROVED BY

STANDARD DESIGN - 30' ROADWAY, SINGLE SPAN BRIDGE

PRETENSIONED PRESTRESSED CONCRETE BEAM BRIDGES

JANUARY, 2005 HS20-44 LOADING

IOWA DEPARTMENT OF TRANSPORTATION - HIGHWAY DIVISION

LXB67 BEAM DETAILS H30SI-27-05

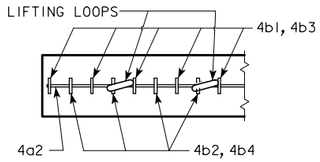

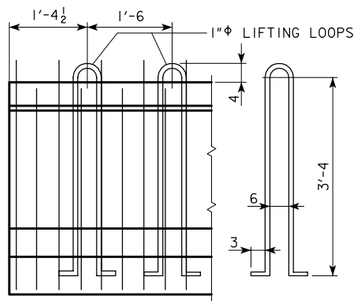

LIFTING LOOP DETAIL

ALTERNATE TYPES MAY BE SUBSTITUTED WITH THE APPROVAL OF THE ENGINEER. LIFTING LOOPS ARE TO BE STRUCTURAL GRADE.

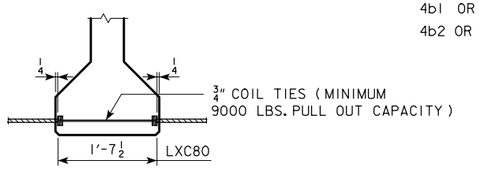

COIL TIE DETAIL

NUMBER AND EXACT LOCATION OF COIL TIES TO BE AS DETAILED ON LONGITUDINAL SECTION SHEETS.

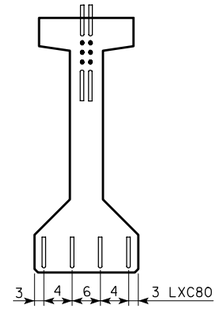

FOUR TOP DEFLECTED OR STRAIGHT STRANDS ARE TO BE CUT WITH 1'-0 PROJECTIONS AND SHOP BENT UP OR DOWN AS SHOWN (BEND TOP AND BOTTOM ROWS). THE REMAINING TOP STRANDS ARE TO BE CUT WITH 0'-5 PROJECTIONS.
FOUR BOTTOM STRANDS ARE TO BE CUT WITH 1'-0 PROJECTIONS AND SHOP BENT AS SHOWN. THE REMAINING BOTTOM STRANDS SHALL BE CUT OFF REASONABLY FLUSH WITH THE CONCRETE.

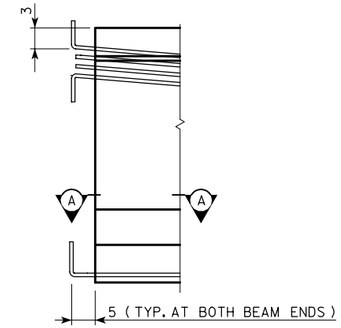

STRAND PROJECTION AT BEAM ENDS WHEN EMBEDDED IN CONCRETE END DIAPHRAGMS

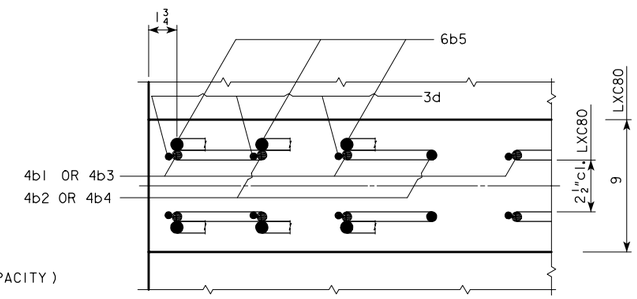

SECTION A-A SHOWING PLACEMENT OF STIRRUPS NEAR END OF BEAM

LXC BEAM DATA

BEAM	SPAN LENGTH ℄-℄ BEARING	OVERALL BEAM LENGTH (L)	STRAND SIZE	NO. OF STRANDS: STRAIGHT	NO. OF STRANDS: DEFLECTED	TOTAL INITIAL PRESTRESS ③ KIPS	HOLD DOWN FORCE-KIPS	CAMBER (in.): AT RELEASE	CAMBER (in.): AFTER LOSSES	DEFLECTION (in.) Δ_D: IMMEDIATE ① (ELASTIC) Δ_I	DEFLECTION (in.) Δ_D: TIME ② (PLASTIC) Δ_T	WEIGHT (TONS)	CONCRETE (C.Y.)	REINFORCING STEEL-(lbs.)
LXC80	80'-0	81'-0	½"Φ	20	10	928.9	29.4	1.46	2.58	1.15	0.29	23.8	11.76	1167

① DEFLECTIONS AT MID-SPAN DUE TO WEIGHT OF SLAB AND STEEL DIAPHRAGM.

② DEFLECTIONS DUE TO THE COMBINED EFFECT OF CREEP DUE TO WEIGHT OF SLAB AND SHRINKAGE OF SLAB.

TOTAL BEAM DEFLECTIONS AT ℄ OF SPAN, Δ_D, DUE TO WEIGHT OF SLAB AND DIAPHRAGMS FOR DETAILING PURPOSE:
$\Delta_D = \Delta_I + \Delta_T$ FOR SIMPLE SPAN.

③ TOTAL INITIAL PRESTRESS FOR LXC80 IS BASED ON 75% f's, f's = 270 ksi AND As = 0.153 sq. in.

NOTES:

THESE BEAMS ARE DESIGNED FOR AASHTO HS20 LIVE LOADS WITH AN ALLOWANCE OF 20 lb. PER SQUARE FOOT OF ROADWAY FOR FUTURE WEARING SURFACE.

HOLD DOWN POINTS FOR DEFLECTED STRANDS MAY BE MOVED TOWARD ENDS OF BEAM A DISTANCE OF 0.05 L MAXIMUM AT PRODUCER'S OPTION.

ALL PRESTRESSING STRANDS SHALL CONFORM TO ASTM A416 GRADE 270 LOW RELAXATION STRANDS.

TOPS OF BEAMS ARE TO BE STRUCK OFF LEVEL AND FINISHED AS PER MATERIALS I.M. 570.

BEARINGS SHALL BE AS DETAILED ON OTHER DESIGN SHEETS.

THE PORTIONS OF THE PRESTRESS BEAMS THAT ARE TO BE EMBEDDED IN THE ABUTMENT SHALL BE ROUGHENED FOR A DISTANCE OF 10" FROM THE BEAM END BY SANDBLASTING OR OTHER APPROVED METHODS TO PROVIDE SUITABLE BOND BETWEEN THE BEAM AND THE DIAPHRAGM IN ACCORDANCE WITH ARTICLE 2403.14 OF THE SPECIFICATIONS.

UNLESS OTHERWISE NOTED ALL BEAMS ARE TO BE INCREASED IN LENGTH BY .0005L TO COMPENSATE FOR ELASTIC SHORTENING, CREEP AND SHRINKAGE.

HOLES MUST BE CAST IN THE WEB TO ACCOMMODATE THE STEEL DIAPHRAGM ATTACHMENTS AS DETAILED ON THE STEEL DIAPHRAGM DETAIL SHEET.

½" DIAMETER STRANDS STRESSED TO NOT MORE THAN 3,000 LBS. EACH MAY BE USED IN LIEU OF THE a BARS WHICH RUN THE FULL LENGTH OF THE BEAM IN THE TOP FLANGE.

BEAMS SHALL BE AT LEAST 28 DAYS OLD BEFORE THE SLAB IS PLACED EXCEPT AS OTHERWISE APPROVED BY THE ENGINEER.

SPECIFICATIONS:

CONSTRUCTION STANDARD SPECIFICATIONS OF THE IOWA DEPARTMENT OF TRANSPORTATION, CURRENT SERIES, WITH CURRENT APPLICABLE SPECIAL PROVISIONS AND SUPPLEMENTAL SPECIFICATIONS.

DESIGN: A.A.S.H.T.O., SERIES OF 1989, WITH MINOR MODIFICATIONS.

DESIGN STRESSES:

DESIGN STRESSES FOR THE FOLLOWING MATERIALS ARE TO BE IN ACCORDANCE WITH A.A.S.H.T.O. STANDARD SPECIFICATIONS FOR HIGHWAY BRIDGES, SERIES OF 1989:

REINFORCING STEEL IN ACCORDANCE WITH SECTION 8, GRADE 60.

CONCRETE IN ACCORDANCE WITH SECTION 9, f'c = 5000 psi.

PRESTRESSING STEEL IN ACCORDANCE WITH SECTION 9, f's = 270,000 psi.

ΔΔ 4b1 AND 4b3 BARS TO BE EPOXY COATED.

* WHERE DEFLECTING STRANDS INTERFERE WITH PLACEMENT, SOME IN-PLACE BENDING MAY BE NECESSARY.

REINFORCING BAR LIST

	BEAM / SPAN	SHAPE	LXC80 80'-0 NO.	LXC80 80'-0 LENGTH
	6a1		4	41'-10
	4a2		2	4'-0
	8a3		2	40'-0
ΔΔ	4b1		-	-
	4b2		-	-
ΔΔ	4b3		60	8'-10
	4b4		10	7'-2
	6b5		16	3'-9
	3c1		-	-
	3c2		60	1'-6
*	3d		140	3'-0
	3e		18	1'-10

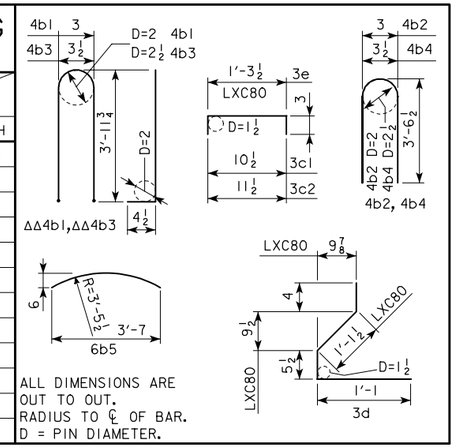

ALL DIMENSIONS ARE OUT TO OUT.
RADIUS TO ℄ OF BAR.
D = PIN DIAMETER.

LATEST REVISION DATE :

APPROVED BY

STANDARD DESIGN - 30' ROADWAY, SINGLE SPAN BRIDGE

PRETENSIONED PRESTRESSED CONCRETE BEAM BRIDGES

JANUARY, 2005 HS20-44 LOADING

IOWA DEPARTMENT OF TRANSPORTATION - HIGHWAY DIVISION

LXC BEAM DETAILS

H30SI-28-05

NOTE: DIMENSIONS FOR THE LOCATION OF THE DEFLECTED STRANDS ARE AT ℄ BEAM AND END OF BEAM.

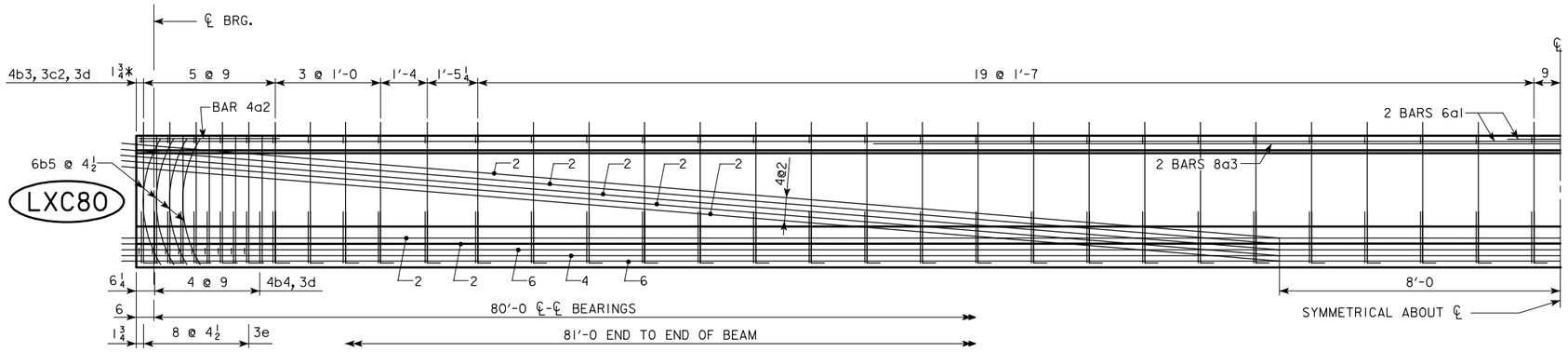

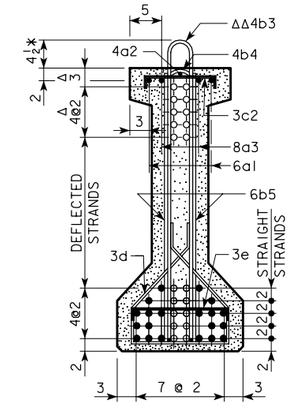

BEAM LXC80

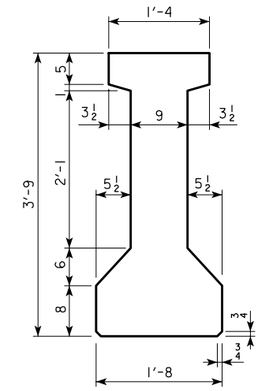

BEAM LXC80

A = 564.5 in.^{2}
Y_b = 20.23 in.
I = 116,354 in.^{4}

NOTE: BARS 6b5 AND 3d ARE TO BE PLACED IN PAIRS.

○ DEFLECTED STRANDS
* KEEP
Δ DIMENSIONS AT END OF BEAM
ΔΔ EPOXY COATED BARS

LATEST REVISION DATE :

APPROVED BY

STANDARD DESIGN - 30' ROADWAY, SINGLE SPAN BRIDGE

PRETENSIONED PRESTRESSED CONCRETE BEAM BRIDGES

JANUARY, 2005 HS20-44 LOADING

IOWA DEPARTMENT OF TRANSPORTATION - HIGHWAY DIVISION

LXC80 BEAM DETAILS H30SI-29-05

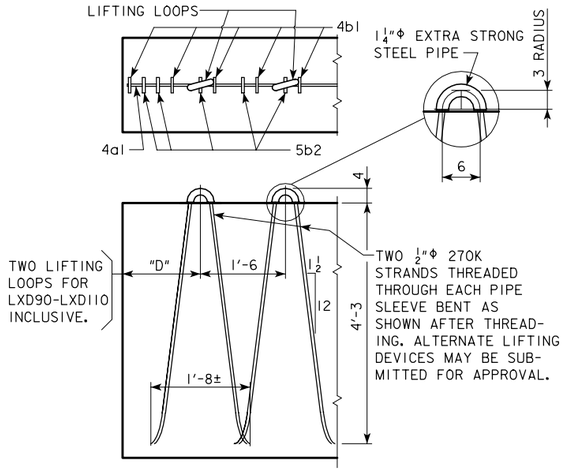

LIFTING LOOP DETAIL

"D" = 1'-3 FOR LXD90
"D" = 3'-9 FOR LXD100
"D" = 8'-2 FOR LXD110

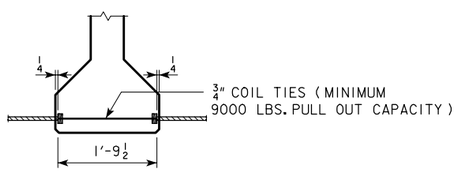

COIL TIE DETAIL

NUMBER AND EXACT LOCATION OF COIL TIES TO BE AS DETAILED ON LONGITUDINAL SECTION SHEETS

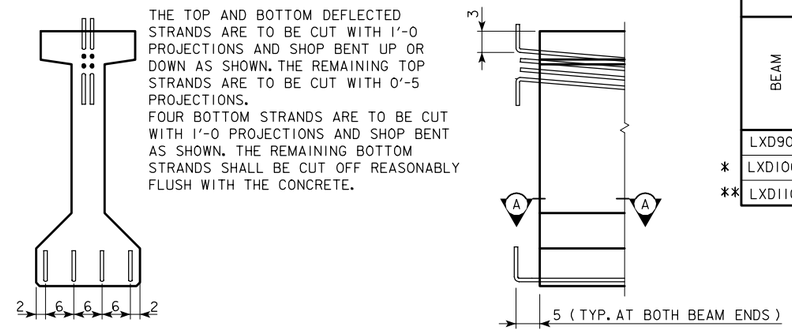

THE TOP AND BOTTOM DEFLECTED STRANDS ARE TO BE CUT WITH 1'-0 PROJECTIONS AND SHOP BENT UP OR DOWN AS SHOWN. THE REMAINING TOP STRANDS ARE TO BE CUT WITH 0'-5 PROJECTIONS.
FOUR BOTTOM STRANDS ARE TO BE CUT WITH 1'-0 PROJECTIONS AND SHOP BENT AS SHOWN. THE REMAINING BOTTOM STRANDS SHALL BE CUT OFF REASONABLY FLUSH WITH THE CONCRETE.

STRAND PROJECTION AT BEAM ENDS WHEN EMBEDDED IN CONCRETE END DIAPHRAGMS

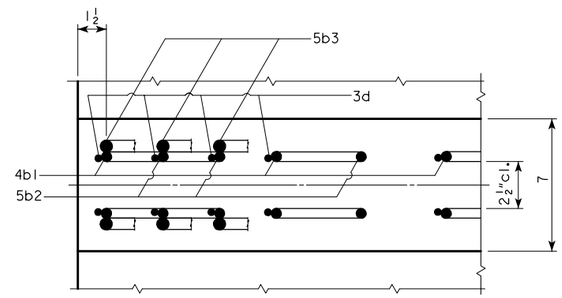

SECTION A-A SHOWING PLACEMENT OF STIRRUPS NEAR END OF BEAM

LXD BEAM DATA

	BEAM	SPAN LENGTH ℄-℄ BEARING	OVERALL BEAM LENGTH (L)	STRAND SIZE	NO. OF STRANDS STRAIGHT	NO. OF STRANDS DEFLECTED	TOTAL INITIAL PRESTRESS KIPS ③	HOLD DOWN FORCE-KIPS	CAMBER (in.) AT RELEASE	CAMBER (in.) AFTER LOSSES	DEFLECTION (in.) Δ_D IMMEDIATE ① (ELASTIC) Δ_I	DEFLECTION (in.) Δ_D TIME ② (PLASTIC) Δ_T	WEIGHT (TONS)	CONCRETE (C.Y.)	REINFORCING STEEL-(lbs.)
	LXD90	90'-0	91'-0	1/2"Φ	20	8	867	27.7	1.24	2.17	1.02	0.25	30.4	15.0	1227
*	LXD100	100'-0	101'-0	1/2"Φ	28	8	1115	24.9	1.89	3.33	1.38	0.35	33.6	16.6	1439
**	LXD110	110'-0	111'-0	1/2"Φ	32	14	1424	33.7	2.30	4.03	1.86	0.46	36.9	18.2	1581

① DEFLECTIONS AT MID-SPAN DUE TO WEIGHT OF SLAB AND STEEL DIAPHRAGM.

② DEFLECTIONS DUE TO THE COMBINED EFFECT OF CREEP DUE TO WEIGHT OF SLAB AND SHRINKAGE OF SLAB.

TOTAL BEAM DEFLECTIONS AT ℄ OF SPAN, Δ_D, DUE TO WEIGHT OF SLAB AND DIAPHRAGMS FOR DETAILING PURPOSE:
$\Delta_D = \Delta_I + \Delta_T$ FOR SIMPLE SPAN.

③ TOTAL INITIAL PRESTRESS FOR LXC90 THRU LXC110 INCLUSIVE IS BASED ON 75% f's.
f's = 270 ksi AND As = 0.153 sq. in.

* MINIMUM CONCRETE f'c (AT 28 DAYS) SHALL BE 6000 PSI.
MINIMUM f'c AT RELEASE SHALL BE 5000 PSI.

** MINIMUM CONCRETE f'c (AT 28 DAYS) SHALL BE 7000 PSI.
MINIMUM f'c AT RELEASE SHALL BE 6000 PSI.

NOTES:

THESE BEAMS ARE DESIGNED FOR AASHTO HS20 LIVE LOADS WITH AN ALLOWANCE OF 20 lb. PER SQUARE FOOT OF ROADWAY FOR FUTURE WEARING SURFACE.

HOLD DOWN POINTS FOR DEFLECTED STRANDS MAY BE MOVED TOWARD ENDS OF BEAM A DISTANCE OF 0.05 L MAXIMUM AT PRODUCER'S OPTION.

ALL PRESTRESSING STRANDS SHALL CONFORM TO ASTM A416 GRADE 270 LOW RELAXATION STRANDS.

TOPS OF BEAMS ARE TO BE STRUCK OFF LEVEL AND FINISHED AS PER MATERIALS I.M. 570.

BEARINGS SHALL BE AS DETAILED ON OTHER DESIGN SHEETS.

THE PORTIONS OF THE PRESTRESS BEAMS THAT ARE TO BE EMBEDDED IN THE ABUTMENT SHALL BE ROUGHENED FOR A DISTANCE OF 10" FROM THE BEAM END BY SANDBLASTING OR OTHER APPROVED METHODS TO PROVIDE SUITABLE BOND BETWEEN THE BEAM AND THE DIAPHRAGM IN ACCORDANCE WITH ARTICLE 2403.14 OF THE SPECIFICATIONS.

UNLESS OTHERWISE NOTED ALL BEAMS ARE TO BE INCREASED IN LENGTH BY .0005L TO COMPENSATE FOR ELASTIC SHORTENING, CREEP AND SHRINKAGE.

HOLES MUST BE CAST IN THE WEB TO ACCOMMODATE THE STEEL DIAPHRAGM ATTACHMENTS AS DETAILED ON THE STEEL DIAPHRAGM DETAIL SHEET.

FOR TRANSPORTING, THE OVERHANG SHALL BE IN ACCORDANCE WITH ART. 2407.13 OF STD. SPEC., EXCEPT THE OVERHANG MAY BE INCREASED TO A MAXIMUM OF 9 FEET FOR THE LXD90 AND LXD100 BEAM, AND 12 FEET FOR THE LXD110 BEAM.

IF BEAM CONCRETE STRENGTH f'c = 7500 psi, THEN BEAM OVERHANG MAY BE INCREASED AS FOLLOWS: 12 FEET FOR THE LXD100 BEAM AND 14 FEET FOR THE LXD110 BEAM.

THE CONTRACTOR SHALL ASSURE THE LATERAL STABILITY OF THE LXD100 AND LXD110 BEAMS DURING HANDLING, TRANSPORTING AND ERECTION BY PROVIDING TEMPORARY BRACING AS NEEDED.

1/2" DIAMETER STRANDS STRESSED TO NOT MORE THAN 3,000 LBS. EACH MAY BE USED IN LIEU OF THE a BARS WHICH RUN THE FULL LENGTH OF THE BEAM IN THE TOP FLANGE.

BEAMS SHALL BE AT LEAST 28 DAYS OLD BEFORE THE SLAB IS PLACED EXCEPT AS OTHERWISE APPROVED BY THE ENGINEER.

DESIGN STRESSES:

DESIGN STRESSES FOR THE FOLLOWING MATERIALS ARE TO BE IN ACCORDANCE WITH A.A.S.H.T.O. STANDARD SPECIFICATIONS FOR HIGHWAY BRIDGES, SERIES OF 1989:

REINFORCING STEEL IN ACCORDANCE WITH SECTION 8, GRADE 60.

CONCRETE IN ACCORDANCE WITH SECTION 9,
f'c = 5000 psi. (EXCEPT AS NOTED).

PRESTRESSING STEEL IN ACCORDANCE WITH SECTION 9,
f's = 270,000 psi.

SPECIFICATIONS:

CONSTRUCTION STANDARD SPECIFICATIONS OF THE IOWA DEPARTMENT OF TRANSPORTATION, CURRENT SERIES, WITH CURRENT APPLICABLE SPECIAL PROVISIONS AND SUPPLEMENTAL SPECIFICATIONS.

DESIGN: A.A.S.H.T.O., SERIES OF 1989, WITH MINOR MODIFICATIONS.

A/B A=SIZE B=NO.

ΔΔ 4b1 AND 4b3 BARS TO BE EPOXY COATED.

REINFORCING BAR LIST

	BEAM / SPAN		LXD90 90'-0		LXD100 100'-0		LXD110 110'-0	
	BAR	SHAPE	NO.	LENGTH	NO.	LENGTH	NO.	LENGTH
	4a1	——	2	18'-0	2	22'-0	2	26'-6
	a2	——	5/4	30'-10	6/4	35'-4	6/4	38'-4
	a3	——	7/2	34'-0	8/2	36'-0	8/2	40'-0
ΔΔ	4b1		74	10-4	81	10'-4	91	10'-4
	5b2		12	8'-8	12	8'-8	12	8'-8
	5b3		20	4'-4	20	4'-4	20	4'-4
	3c		74	2'-1	81	2'-1	91	2'-1
	3d		74	5'-7	81	5'-7	91	5'-7
	3e		14	2'-3	16	2'-3	16	2'-3

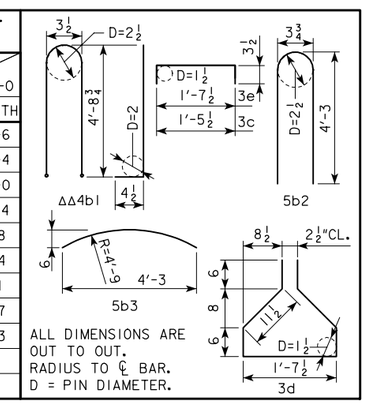

ALL DIMENSIONS ARE OUT TO OUT.
RADIUS TO ℄ BAR.
D = PIN DIAMETER.

LATEST REVISION DATE :

APPROVED BY

STANDARD DESIGN - 30' ROADWAY, SINGLE SPAN BRIDGE

PRETENSIONED PRESTRESSED CONCRETE BEAM BRIDGES

JANUARY, 2005 HS20-44 LOADING

IOWA DEPARTMENT OF TRANSPORTATION - HIGHWAY DIVISION

LXD BEAM DETAILS

H30SI-30-05

NOTE: DIMENSIONS FOR THE LOCATION OF THE DEFLECTED STRANDS ARE AT ℄ BEAM AND END OF BEAM.

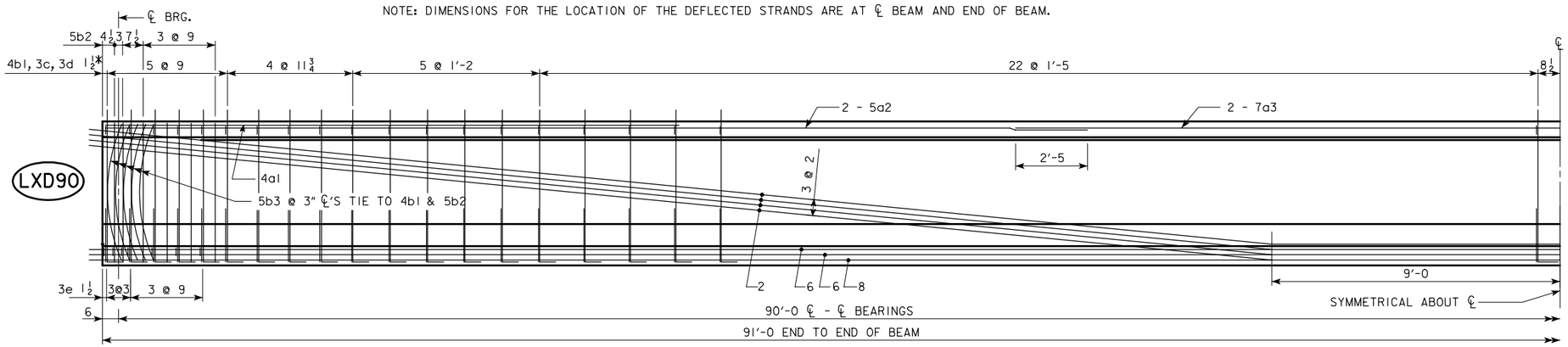

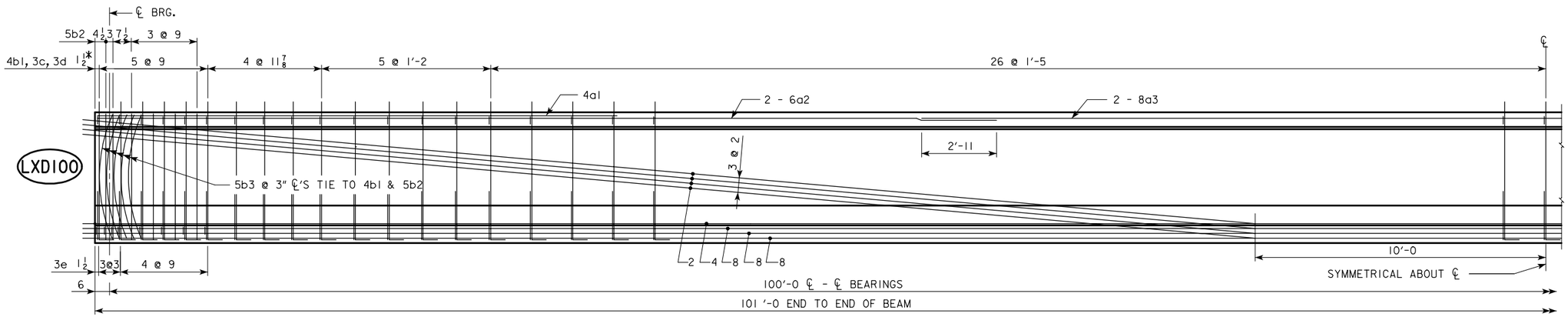

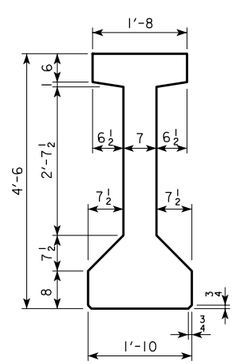

TYPICAL "LXD" BEAM CROSS SECTION

AREA = 638.75 in.^{2}
Y_b = 24.37 in.
I = 214,974 in.^{4}

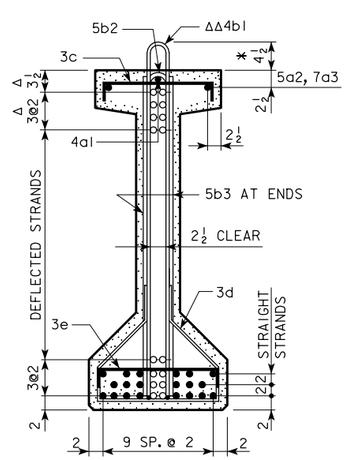

BEAM LXD90

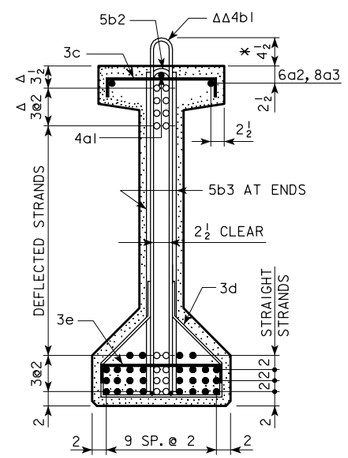

BEAM LXD100

○ DEFLECTED STRANDS
* KEEP
Δ DIMENSIONS AT END OF BEAM
ΔΔ EPOXY COATED BARS

LATEST REVISION DATE :

APPROVED BY

STANDARD DESIGN - 30' ROADWAY, SINGLE SPAN BRIDGE

PRETENSIONED PRESTRESSED CONCRETE BEAM BRIDGES

JANUARY, 2005 HS20-44 LOADING

IOWA DEPARTMENT OF TRANSPORTATION - HIGHWAY DIVISION

LXD90 & LXD100 BEAM DETAILS | H30S1-31-05

NOTE: DIMENSIONS FOR THE LOCATION OF THE DEFLECTED STRANDS ARE AT ℄ BEAM AND END OF BEAM.

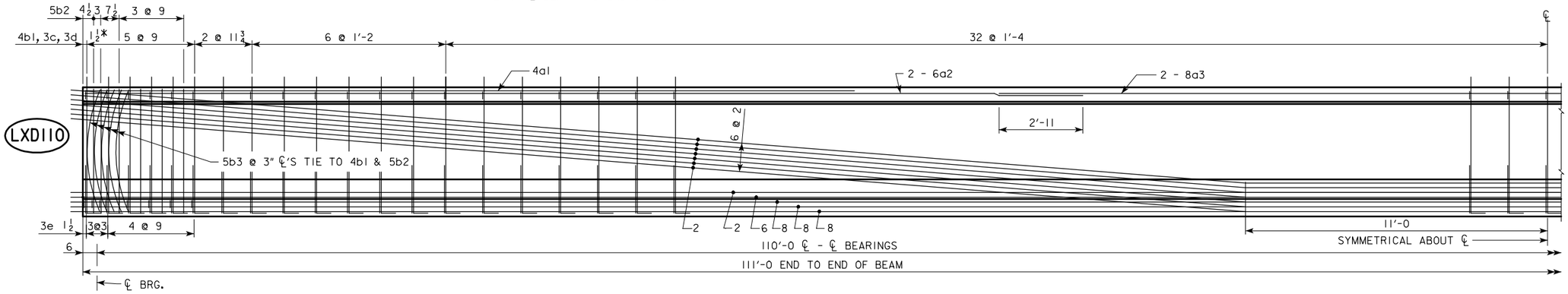

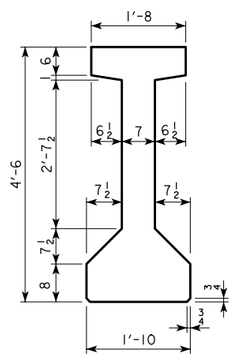

TYPICAL "LXD" BEAM CROSS SECTION

AREA = 638.75 in.^{2}
Y_b = 24.37 in.
I = 214,974 in.^{4}

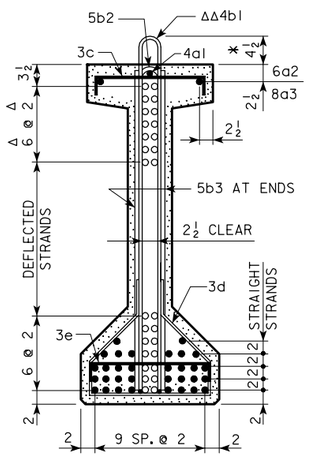

BEAM LXD110

○ DEFLECTED STRANDS
* KEEP
Δ DIMENSIONS AT END OF BEAM
ΔΔ EPOXY COATED BARS

LATEST REVISION DATE :

APPROVED BY

STANDARD DESIGN - 30' ROADWAY, SINGLE SPAN BRIDGE

PRETENSIONED PRESTRESSED CONCRETE BEAM BRIDGES

JANUARY, 2005 HS20-44 LOADING

IOWA DEPARTMENT OF TRANSPORTATION - HIGHWAY DIVISION

LXD110 BEAM DETAILS

H30SI-32-05

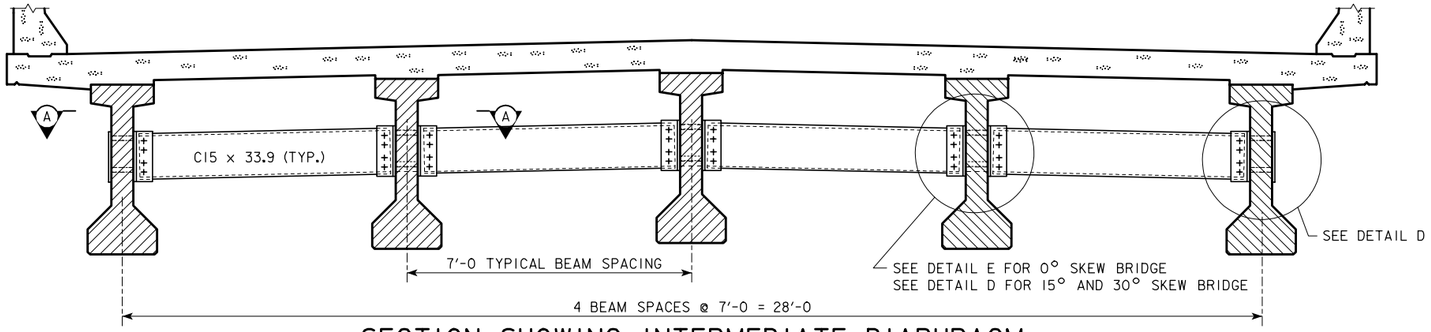

SECTION SHOWING INTERMEDIATE DIAPHRAGM

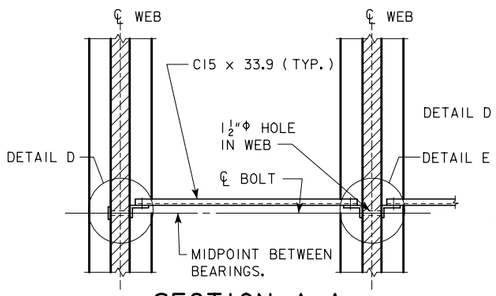

SECTION A-A
FOR 0° SKEW BRIDGES

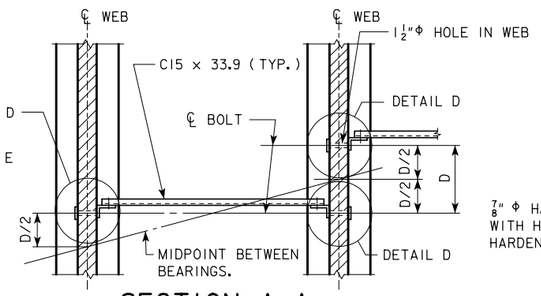

SECTION A-A
FOR 15° AND 30° SKEW BRIDGES

NOTES:

ALL DIAPHRAGM MATERIALS, INCLUDING BOLTS, NUTS AND WASHERS SHALL BE GALVANIZED.

SHOP DRAWINGS OF THE STEEL DIAPHRAGMS SHOWING LAYOUT AND DETAILS OF THE DIAPHRAGMS SHALL BE SUBMITTED FOR APPROVAL.

ALL COSTS FOR FURNISHING AND INSTALLING STEEL INTERMEDIATE DIAPHRAGMS SHALL BE INCLUDED IN THE PRICE BID FOR STRUCTURAL STEEL.

THE $1\frac{1}{2}$"Φ HOLES FOR THE $\frac{7}{8}$"Φ H.T.S. BOLTS SHALL BE CAST INTO THE WEB. DRILLING IS NOT ALLOWED.

THE $\frac{7}{8}$"Φ H.T.S. BOLTS THROUGH THE WEB SHALL HAVE A THREAD LENGTH OF 3" MIN. AND 4" MAX. AND SHALL MEET THE REQUIREMENTS OF ASTM A449.

ALL BOLTS ARE TO BE TIGHTENED PRIOR TO PLACING BRIDGE FLOOR

INTERMEDIATE DIAPHRAGM STRUCTURAL STEEL

ONE CONNECTION DETAIL "E"

2 - $\frac{7}{8}$"Φ x LENGTH H.T.S. BOLTS WITH NUTS AND WASHERS

WEB THICKNESS	LENGTH OF H.T.S. BOLTS	WEIGHT PER DETAIL "E"
6"	9"	4.30 LBS.
7"	10"	4.66 LBS.
9"	12"	5.34 LBS.

2 - L 6 x 4 x $\frac{1}{2}$ x 1'-$3\frac{1}{4}$ = 41.2 LBS.

ONE CONNECTION DETAIL "D"

2 - $\frac{7}{8}$"Φ x LENGTH H.T.S. BOLTS WITH NUTS AND WASHERS

WEB THICKNESS	LENGTH OF H.T.S. BOLTS	WEIGHT PER DETAIL "D"
6"	9"	4.30 LBS.
7"	10"	4.66 LBS.
9"	12"	5.34 LBS.

1 - BACKING PL 4 x $\frac{3}{8}$ x 1'-$3\frac{1}{4}$ = 6.5 LBS.

1 - L 6 x 4 x $\frac{1}{2}$ x 1'-$3\frac{1}{4}$ = 20.6 LBS.

ONE C15 x 33.9 DIAPHRAGM

WEB THICKNESS \ BEAM SPACING	7'-0	
	* LENGTH	UNIT WEIGHT (LBS.)
6"	6'-$2\frac{5}{8}$	210.8
7"	6'-$1\frac{5}{8}$	208.0
9"	5'-$11\frac{5}{8}$	202.4

DIAPHRAGM CONNECTION BOLTS

8-$\frac{7}{8}$"Φ x 0'-$2\frac{3}{4}$ H.T.S. BOLTS WITH NUTS AND WASHERS, PER UNIT DIAPHRAGM

10.3 LBS.

* THE LENGTH OF THE C15 x 33.9 SHOWN IN THE TABLE IS BASED ON A VARIABLE CLEARANCE OF $1\frac{11}{16}$ TO $2\frac{1}{16}$ BETWEEN THE FACE OF BEAM WEB AND END OF C15 x 33.9.

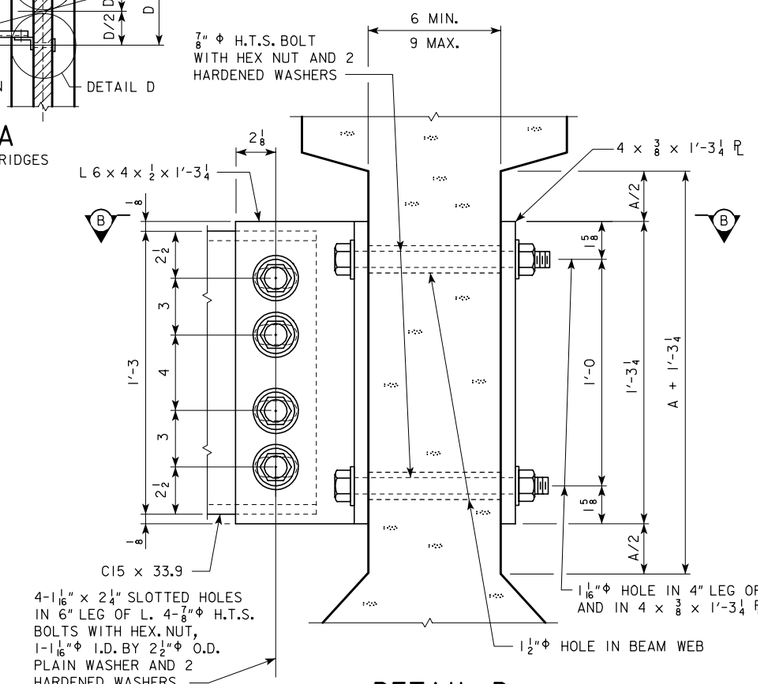

DETAIL D

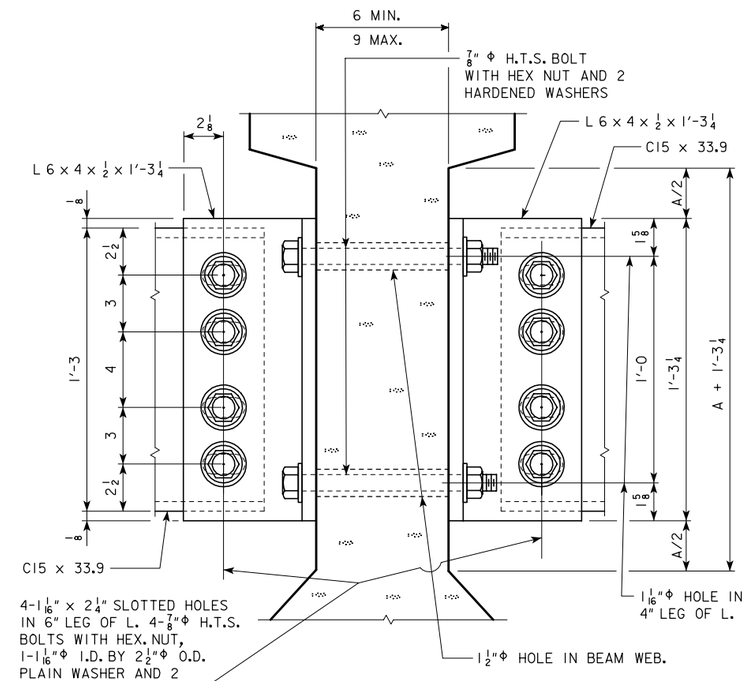

DETAIL E

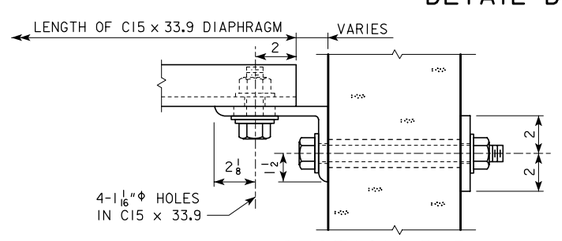

SECTION B-B

BEAM SERIES	DIMENSIONS	
	A + 1'-$3\frac{1}{4}$	A/2
LXA	1'-4	$\frac{3}{8}$
LXB	1'-8	$2\frac{3}{8}$
LXC	2'-1	$4\frac{3}{8}$
LXD	2'-$7\frac{1}{2}$	$8\frac{1}{8}$

LATEST REVISION DATE :

APPROVED BY

STANDARD DESIGN - 30' ROADWAY, SINGLE SPAN BRIDGE

PRETENSIONED PRESTRESSED CONCRETE BEAM BRIDGES

JANUARY, 2005 HS20-44 LOADING

IOWA DEPARTMENT OF TRANSPORTATION - HIGHWAY DIVISION

INTERMEDIATE STEEL DIAPHRAGMS

H30SI-33-05

TABLE OF BARRIER RAIL DIMENSIONS AND NUMBERS

℄-℄ ABUT. BRG		46'-8			55'-0			67'-6			80'-0			90'-0			100'-0			110'-0		
SKEW		0°	15°	30°	0°	15°	30°	0°	15°	30°	0°	15°	30°	0°	15°	30°	0°	15°	30°	0°	15°	30°
DIMENSION OR NUMBER	L (FT.-IN.)	63'-8	63'-9 1/4	64'-1 9/16	72'-0	72'-1 1/4	72'-5 9/16	84'-6	84'-7 1/4	84'-11 9/16	107'-0	107'-1 1/4	107'-5 9/16	117'-0	117'-1 1/4	117'-5 9/16	127'-0	127'-1 1/4	127'-5 9/16	137'-0	137'-1 1/4	137'-5 9/16
	B (FT.-IN.)	49'-8	49'-9 1/4	50'-1 9/16	58'-0	58'-1 1/4	58'-5 9/16	70'-6	70'-7 1/4	70'-11 9/16	93'-0	93'-1 1/4	93'-5 9/16	103'-0	103'-1 1/4	103'-5 9/16	113'-0	113'-1 1/4	113'-5 9/16	123'-0	123'-1 1/4	123'-5 9/16
	S (FT.-IN.)	49'-8	49'-9 1/4	50'-1 9/16	58'-0	58'-1 1/4	58'-5 9/16	70'-6	70'-7 1/4	70'-11 9/16	83'-0	83'-1 1/4	83'-5 9/16	93'-0	93'-1 1/4	93'-5 9/16	103'-0	103'-1 1/4	103'-5 9/16	113'-0	113'-1 1/4	113'-5 9/16
	C	39	39	39	47	47	47	60	60	60	72	72	72	82	82	82	92	92	92	102	102	102
	D (FT.-IN.)	39'-0	39'-0	39'-0	47'-0	47'-0	47'-0	60'-0	60'-0	60'-0	72'-0	72'-0	72'-0	82'-0	82'-0	82'-0	92'-0	92'-0	92'-0	102'-0	102'-0	102'-0
	E	40	40	40	48	48	48	61	61	61	73	73	73	83	83	83	93	93	93	103	103	103
	F (FT.-IN.)	0'-0	0'-0	0'-0	0'-0	0'-0	0'-0	0'-0	0'-0	0'-0	5'-0	5'-0	5'-0	5'-0	5'-0	5'-0	5'-0	5'-0	5'-0	5'-0	5'-0	5'-0
	W (FT.-IN.)	4'-10	4'-10 5/8	5'-0 13/16	5'-0	5'-0 5/8	5'-2 13/16	4'-9	4'-9 5/8	4'-11 13/16	5'-0	5'-0 5/8	5'-2 13/16	5'-0	5'-0 5/8	5'-2 13/16	5'-0	5'-0 5/8	5'-2 13/16	5'-0	5'-0 5/8	5'-2 13/16
	a	0	0	0	0	0	0	0	0	0	5	5	5	5	5	5	5	5	5	5	5	5

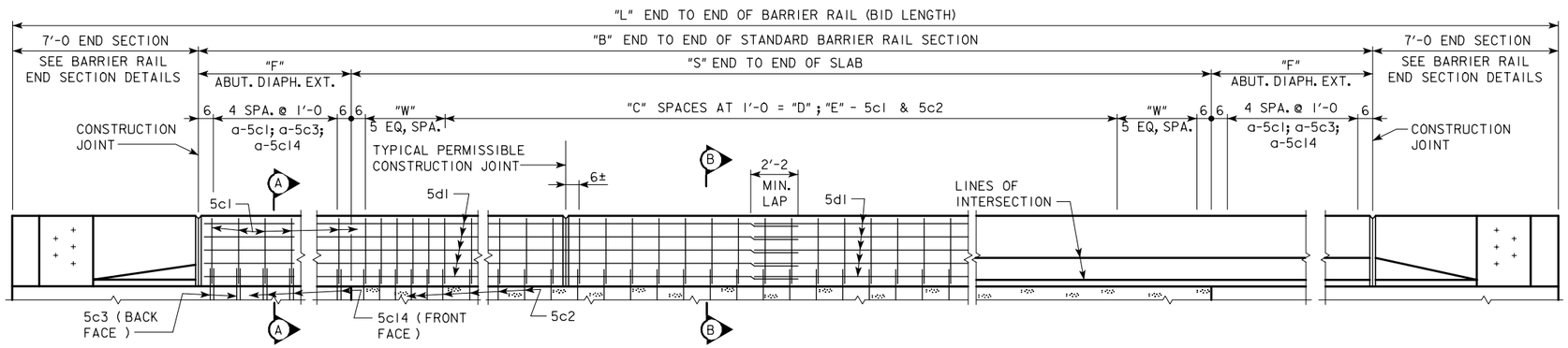

ELEVATION OF BARRIER RAIL LAYOUT

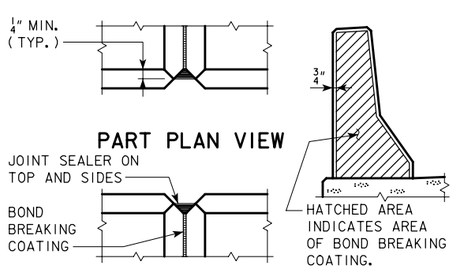

BARRIER RAIL JOINT DETAILS

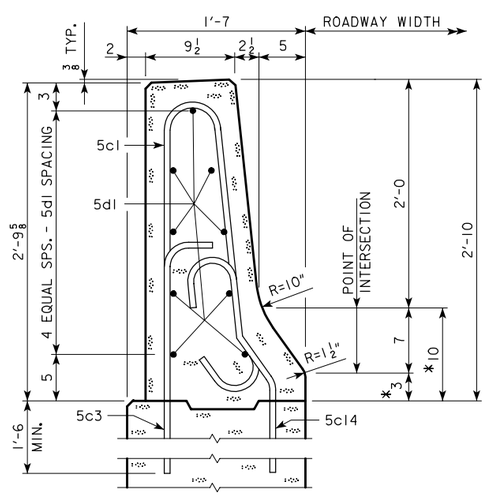

PART SECTION A-A

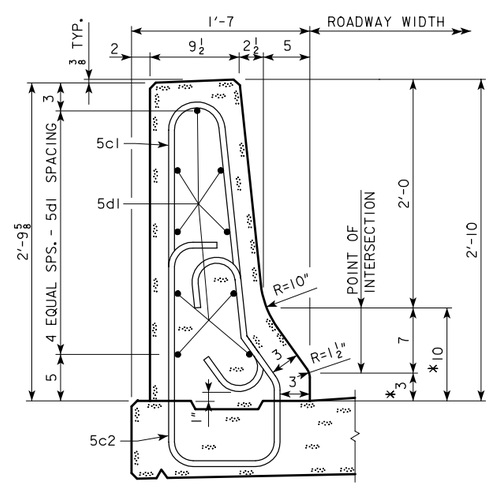

PART SECTION B-B

*DENOTES THE MAXIMUM VALUE FOR THIS DIMENSION. THIS DIMENSION MAY VARY DUE TO CONSTRUCTION INACCURACIES.

BARRIER RAIL NOTES:

MINIMUM CLEAR DISTANCE FROM FACE OF CONCRETE TO NEAR REINFORCING BAR IS TO BE 2" UNLESS OTHERWISE NOTED OR SHOWN.

THE PERMISSIBLE CONSTRUCTION JOINTS ARE TO BE PLACED BETWEEN VERTICAL BARS AT A MINIMUM SPACING OF 20 FEET. CONSTRUCTION JOINT CONTACT SURFACES ARE TO BE COATED WITH AN APPROVED BOND BREAKER.

COST OF THE JOINT SEALER AND BOND BREAKER SHALL BE CONSIDERED INCIDENTAL TO OTHER CONSTRUCTION.

THE CONCRETE BARRIER RAIL IS TO BE BID ON A LINEAL FOOT BASIS. THE NUMBER OF LINEAL FEET OF BARRIER RAIL INSTALLED WILL BE PAID FOR AT THE CONTRACT PRICE PER LINEAL FOOT BASED ON PLAN QUANTITIES. PRICE BID FOR CONCRETE BARRIER RAILING SHALL BE FULL COMPENSATION FOR FURNISHING ALL MATERIAL, EXCLUDING REINFORCING STEEL, AND ALL OF THE EQUIPMENT AND LABOR REQUIRED TO ERECT THE RAIL IN ACCORDANCE WITH THESE PLANS AND CURRENT SPECIFICATIONS. IF CONDUIT IS REQUIRED IN THIS PLAN THE RIGID STEEL CONDUIT, JUNCTION BOXES AND FITTINGS INCLUDING LABOR AND ANY ADDITIONAL WORK TO DO THE INSTALLATION IS CONSIDERED INCIDENTAL TO THE COST OF THE RAILING.

ALL BARRIER RAIL REINFORCING STEEL IS TO BE INCLUDED WITH THE SUPERSTRUCTURE REINFORCING STEEL.

THE JOINT SEALER SHALL BE LIGHT GRAY NONSAG LATEX CAULKING SEALER MARKETED FOR OUTDOOR USE. NO TESTING OR CERTIFICATION IS REQUIRED.

TOP OF THE BARRIER RAIL IS TO BE PARALLEL TO THE THEORETICAL ℄ GRADE.

CROSS SECTIONAL AREA OF THE STANDARD SECTION OF THE BARRIER RAIL = 2.84 SQUARE FEET.

CONCRETE BARRIER RAILS PLACED USING THE SLIPFORM METHOD WILL REQUIRE THE USE OF A CLASS BR CONCRETE IN ACCORDANCE WITH ARTICLE 2513.03B OF THE STANDARD SPECIFICATION. CLASS D CONCRETE IS NOT PERMITTED FOR CONCRETE BARRIER RAILS PLACED USING THE SLIPFORM METHOD.

LATEST REVISION DATE :

APPROVED BY

STANDARD DESIGN - 30' ROADWAY, SINGLE SPAN BRIDGE

PRETENSIONED PRESTRESSED CONCRETE BEAM BRIDGES

JANUARY, 2005 HS20-44 LOADING

IOWA DEPARTMENT OF TRANSPORTATION - HIGHWAY DIVISION

BARRIER RAIL DETAILS

SHEET 1 OF 3

H30S1-34-05

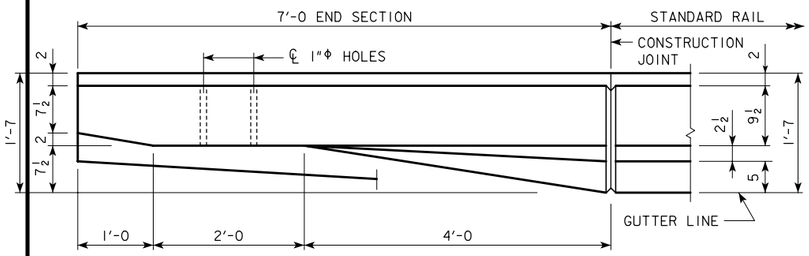

PART PLAN VIEW

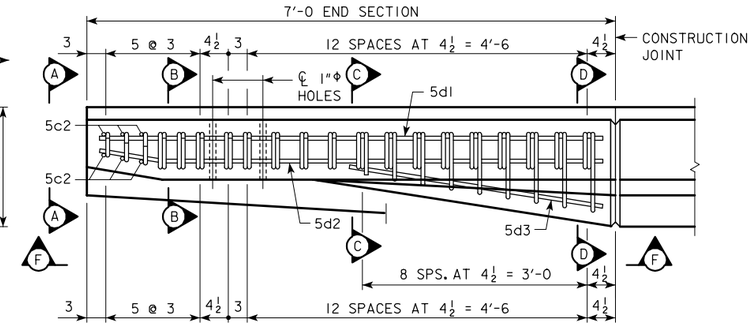

PART VIEW E-E

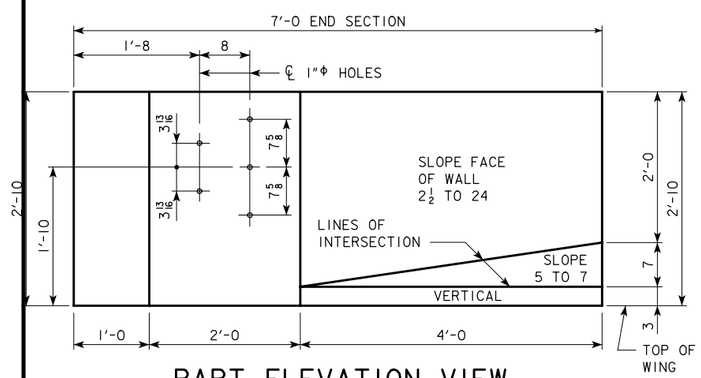

PART ELEVATION VIEW

PROVIDE 5 HOLES FORMED WITH 1"Φ PLASTIC CONDUIT. COST TO BE INCLUDED IN PRICE BID FOR CONCRETE BARRIER RAILING.

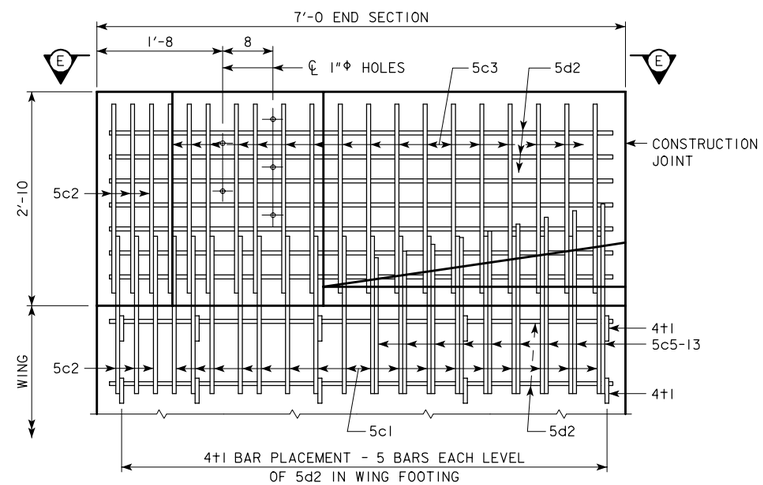

PART VIEW F-F

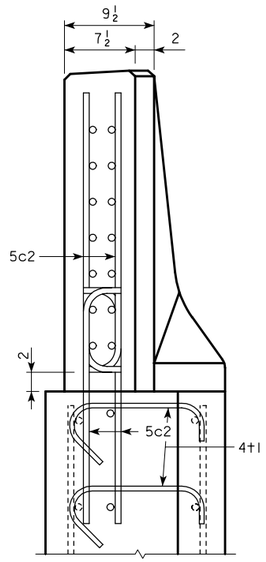

VIEW A-A

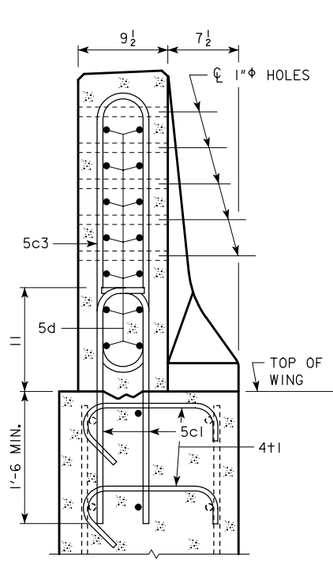

SECTION B-B

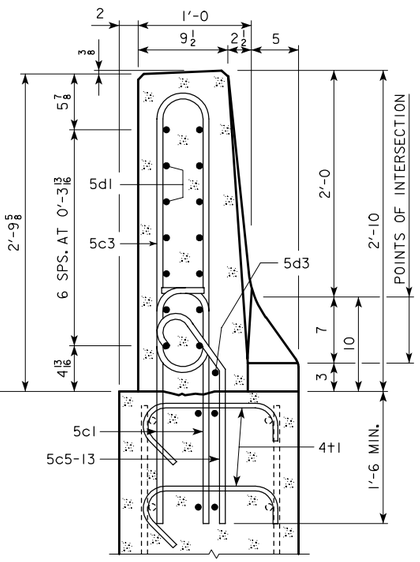

SECTION C-C

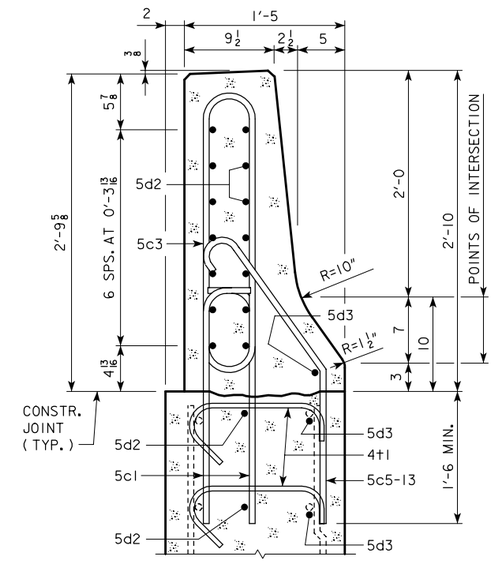

SECTION D-D

REINFORCING STEEL - ONE END SECTION

BAR	LOCATION	SHAPE	NO.	LENGTH	WEIGHT
5c1	VERTICAL, RAIL TO WING FOOTING		34	2'-10	100
5c2	VERTICAL AT NOSE, RAIL TO WING FOOTING		12	2'-9	34
5c3	VERTICAL		17	6'-1	108
5c5-13	VERTICAL		9	VARIES	34
5d1	HORIZONTAL		7	6'-8	49
5d2	HORIZONTAL		9	6'-9	63
5d3	HORIZONTAL		3	3'-5	11
4+1	WING FOOTING TIE BARS		10	VARIES	13
(INCLUDE WITH BARRIER RAIL REINFORCING)		TOTAL WEIGHT (LBS.)			412

CONCRETE PLACEMENT SUMMARY

SECTION	TOTAL
BARRIER RAIL ONE END SECTION	0.62 CU. YD.

BENT BAR DETAILS

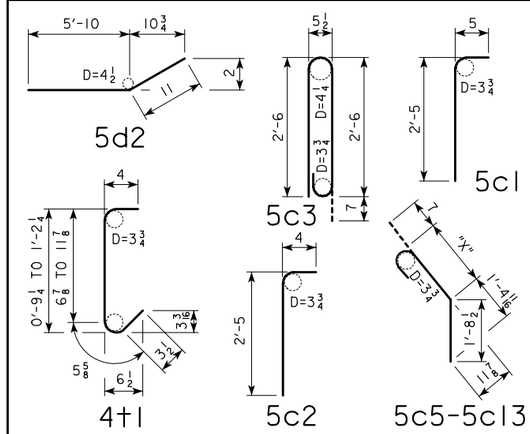

BAR	"X"
5c5	1'-0 3/16
5c6	1'-1 7/16
5c7	1'-2 11/16
5c8	1'-3 15/16
5c9	1'-4 1/8
5c10	1'-6 3/8
5c11	1'-7 5/8
5c12	1'-8 7/8
5c13	1'-10 1/8

NOTE: ALL DIMENSIONS ARE OUT TO OUT. D = PIN DIAMETER.

NOTES:

CONSTRUCTION JOINT BETWEEN TOP OF WING AND BARRIER IS ROUGHENED CONCRETE.

THE 10" RADIUS AND 1½" RADIUS ARE TYPICAL AND SHALL BE USED WHEN CONSTRUCTING THE CORNERS FOR VIEW A-A, SECTION B-B, SECTION C-C AND SECTION D-D.

THE 5c1, 6 - 5c2, 5c5-13, 2 - 5d2 AND 2 - 5d3 BARS ARE TO BE PLACED WITH THE ABUTMENT WING FOOTING. THE DETAILS FOR PLACEMENT ARE SHOWN ON THE LONGITUDINAL SECTION SHEET.

DASHED LINES BELOW THE TOP OF WING ARE THE ABUTMENT WING REINFORCING STEEL. SEE LONGITUDINAL SECTION SHEETS FOR PLACEMENT.

LATEST REVISION DATE :

APPROVED BY

STANDARD DESIGN - 30' ROADWAY, SINGLE SPAN BRIDGE

PRETENSIONED PRESTRESSED CONCRETE BEAM BRIDGES

JANUARY, 2005 HS20-44 LOADING

IOWA DEPARTMENT OF TRANSPORTATION - HIGHWAY DIVISION

BARRIER RAIL DETAILS

SHEET 2 OF 3

H30SI-35-05

REINFORCING STEEL-TWO BARRIER RAILS

(NOTE: THESE REINFORCING BARS TO BE USED ON ALL SKEWS)

BRIDGE LENGTH				46'-8			55'-0			67'-6			80'-0			90'-0			100'-0			110'-0		
SECTION	BAR	LOCATION	SHAPE	NO.	LENGTH	WEIGHT	NO.	LENGTH	WEIGHT	NO.	LENGTH	WEIGHT	NO.	LENGTH	WEIGHT	NO.	LENGTH	WEIGHT	NO.	LENGTH	WEIGHT	NO.	LENGTH	WEIGHT
STANDARD SECTION	5c1	VERTICAL		100	5'-11	617	116	5'-11	716	142	5'-11	876	186	5'-11	1148	206	5'-11	1271	226	5'-11	1395	246	5'-11	1518
	5c2	VERTICAL		100	6'-0	626	116	6'-0	726	142	6'-0	889	166	6'-0	1039	186	6'-0	1164	206	6'-0	1289	226	6'-0	1414
	5c3	VERTICAL		-	-	-	-	-	-	-	-	-	20	2'-10	59	20	2'-10	59	20	2'-10	59	20	2'-10	59
	5c14	VERTICAL		-	-	-	-	-	-	-	-	-	20	3'-10	80	20	3'-10	80	20	3'-10	80	20	3'-10	80
	5d1	LONGITUDINAL		36	26'-1	979	36	30'-3	1136	36	36'-6	1371	54	32'-7	1835	54	35'-11	2023	54	39'-3	2211	72	32'-6	2441
		4 END SECTIONS @ 412 LBS.				1648			1648			1648			1648			1648			1648			1648
TOTAL LBS. (INCLUDE WITH SUPERSTRUCTURE REINFORCING)						3870			4226			4784			5809			6245			6682			7160

NOTE: ALL BARRIER RAIL REINFORCEMENT TO BE EPOXY COATED IF EPOXY COATING OPTION IS USED. SEE SHEET H30SI-09-05, H30SI-16-05 AND H30SI-23-05.

BENT BAR DETAILS

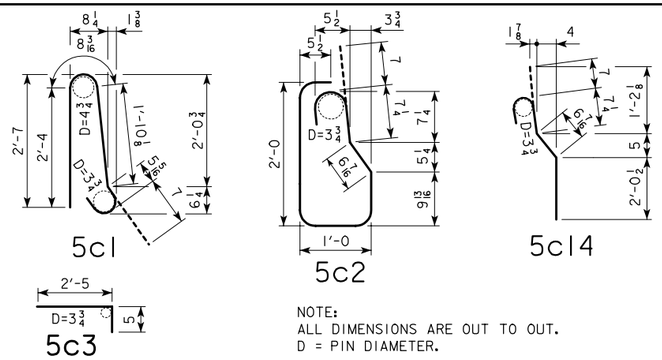

CONCRETE PLACEMENT SUMMARY

BRIDGE LENGTH	46'-8	55'-0	67'-6	80'-0	90'-0	100'-0	110'-0
STANDARD SECTION * 2 X B @ 0.1052 CU.YD. PER FT.	10.5	12.3	14.9	19.7	21.8	23.9	26.0
END SECTION 4 @ 0.62 CU.YD.	2.5	2.5	2.5	2.5	2.5	2.5	2.5
TOTAL (CU. YD.)	13.0	14.8	17.4	22.2	24.3	26.4	28.5

* SEE SHEET H30SI-34 FOR DIMENSION "B".
CONCRETE QUANTITIES SHOWN ARE BASED ON 30° SKEW BID LENGTHS.

CONCRETE BARRIER RAIL QUANTITIES

BRIDGE LENGTH		UNIT	46'-8	55'-0	67'-6	80'-0	90'-0	100'-0	110'-0
CONCRETE BARRIER RAILING	0° SKEW	L.F.	127.3	144.0	169.0	214.0	234.0	254.0	274.0
CONCRETE BARRIER RAILING	15° SKEW	L.F.	127.5	144.2	169.2	214.2	234.2	254.2	274.2
CONCRETE BARRIER RAILING	30° SKEW	L.F.	128.3	144.9	169.9	214.9	234.9	254.9	274.9

LATEST REVISION DATE :

APPROVED BY

STANDARD DESIGN - 30' ROADWAY, SINGLE SPAN BRIDGE

PRETENSIONED PRESTRESSED CONCRETE BEAM BRIDGES

JANUARY, 2005 HS20-44 LOADING

IOWA DEPARTMENT OF TRANSPORTATION - HIGHWAY DIVISION

BARRIER RAIL DETAILS
SHEET 3 OF 3

H30SI-36-05

TABLE OF OPEN RAIL DIMENSIONS AND NUMBERS

℄-℄ ABUT. BRG		46'-8			55'-0			67'-6			80'-0			90'-0			100'-0			110'-0		
SKEW		0°	15°	30°	0°	15°	30°	0°	15°	30°	0°	15°	30°	0°	15°	30°	0°	15°	30°	0°	15°	30°
DIMENSION OR NUMBER	L (FT.-IN.)	63'-8	63'-9 1/4	64'-1 9/16	72'-0	72'-1 1/4	72'-5 9/16	84'-6	84'-7 1/4	84'-11 9/16	107'-0	107'-1 1/4	107'-5 9/16	117'-0	117'-1 1/4	117'-5 9/16	127'-0	127'-1 1/4	127'-5 9/16	137'-0	137'-1 1/4	137'-5 9/16
	S (FT.-IN.)	49'-8	49'-9 1/4	50'-1 9/16	58'-0	58'-1 1/4	58'-5 9/16	70'-6	70'-7 1/4	70'-11 9/16	83'-0	83'-1 1/4	83'-5 9/16	93'-0	93'-1 1/4	93'-5 9/16	103'-0	103'-1 1/4	103'-5 9/16	113'-0	113'-1 1/4	113'-5 9/16
	F (FT.-IN.)	0'-0	0'-0	0'-0	0'-0	0'-0	0'-0	0'-0	0'-0	0'-0	5'-0	5'-0	5'-0	5'-0	5'-0	5'-0	5'-0	5'-0	5'-0	5'-0	5'-0	5'-0
	a	0	0	0	0	0	0	0	0	0	9	9	9	9	9	9	9	9	9	9	9	9

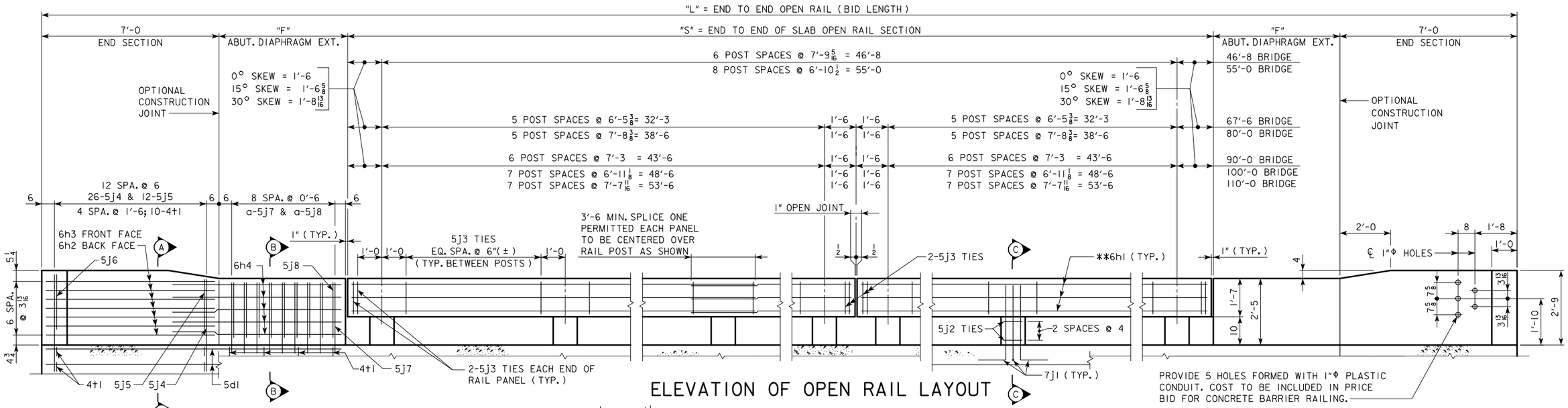

ELEVATION OF OPEN RAIL LAYOUT

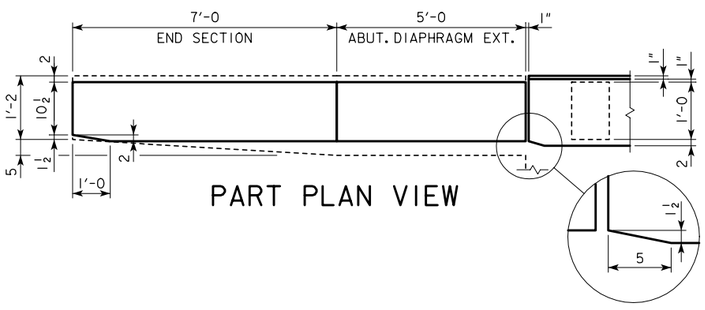

PART PLAN VIEW

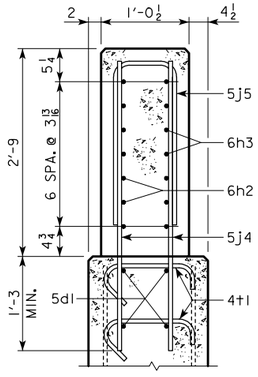

SECTION A-A

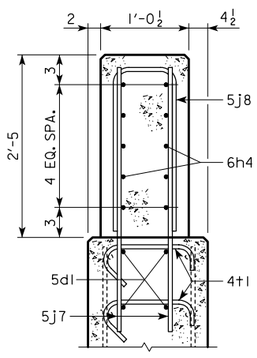

SECTION B-B

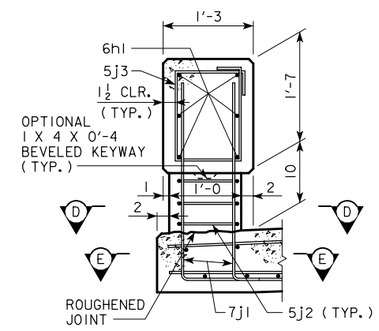

PART SECTION C-C

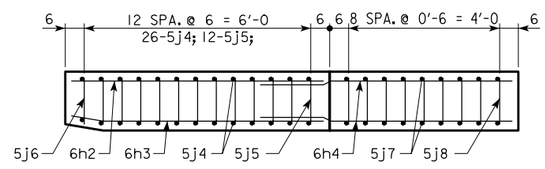

PART PLAN SECTION

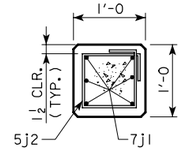

PART SECTION D-D

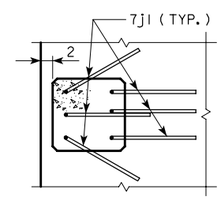

PART PLAN E-E

** MAY BE SPLICED. ACTUAL ORDERED LENGTH WILL VARY FROM TABULATED LENGTH TO REFLECT USE OF OPTIONAL 3'-6 SPLICE.

PAYMENT FOR REINFORCING BARS SHALL BE BASED ON NO SPLICES, AND NO ALLOWANCE SHALL BE MADE FOR THE ADDITIONAL LENGTH OF BAR REQUIRED FOR THE USE OF SPLICES.

OPEN RAIL NOTES:

MINIMUM CLEAR DISTANCE FROM FACE OF CONCRETE TO NEAR REINFORCING BAR IS TO BE 2" UNLESS OTHERWISE NOTED OR SHOWN.

THE CONCRETE OPEN RAIL IS TO BE BID ON A LINEAL FOOT BASIS MEASURED FROM END TO END OF RAIL. THE NUMBER OF LINEAL FEET OF OPEN RAIL INSTALLED WILL BE PAID FOR AT THE CONTRACT PRICE PER LINEAL FOOT. PRICE BID FOR CONCRETE OPEN RAIL SHALL BE FULL COMPENSATION FOR FURNISHING ALL MATERIAL, EXCLUDING REINFORCING STEEL, AND ALL OF THE EQUIPMENT AND LABOR REQUIRED TO CONSTRUCT THE RAIL IN ACCORDANCE WITH THESE PLANS AND CURRENT SPECIFICATIONS.

ALL OPEN RAIL REINFORCING STEEL IS TO BE INCLUDED WITH THE SUPERSTRUCTURE REINFORCING STEEL.

LATEST REVISION DATE :

APPROVED BY

STANDARD DESIGN - 30' ROADWAY, SINGLE SPAN BRIDGE

PRETENSIONED PRESTRESSED CONCRETE BEAM BRIDGES

JANUARY, 2005 HS20-44 LOADING

IOWA DEPARTMENT OF TRANSPORTATION - HIGHWAY DIVISION

OPEN RAIL DETAILS

SHEET 1 OF 2

H30S1-37-05

OPEN RAIL REINFORCING BAR LIST - TWO RAILS

NOTE: THESE REINFORCING BARS TO BE USED ON ALL SKEWS.

	℄-℄ ABUTMENT BEARING			46'-8			55'-0			67'-6			80'-0			90'-0			100'-0			110'-0		
	BAR	LOCATION	SHAPE	NO.	LENGTH	WEIGHT	NO.	LENGTH	WEIGHT	NO.	LENGTH	WEIGHT	NO.	LENGTH	WEIGHT	NO.	LENGTH	WEIGHT	NO.	LENGTH	WEIGHT	NO.	LENGTH	WEIGHT
STANDARD SECTION	7j1	RAIL POST VERTICAL		84	4'-1	701	108	4'-1	901	144	4'-1	1202	144	4'-1	1202	168	4'-1	1402	192	4'-1	1602	192	4'-1	1602
	5j2	RAIL POST TIES		42	4'-0	175	54	4'-0	225	72	4'-0	300	72	4'-0	300	84	4'-0	350	96	4'-0	401	96	4'-0	401
	5j3	RAIL TIES		164	5'-8	969	184	5'-8	1088	216	5'-8	1277	276	5'-8	1631	304	5'-8	1797	324	5'-8	1915	380	5'-8	2246
	6h1	RAIL LONGITUDINAL	—	24	26'-8	961	24	30'-10	1111	24	34'-10	1256	24	41'-1	1481	24	46'-1	1661	24	51'-1	1841	24	56'-1	2022
ABUT. DIAPH. SECTION	5j7	VERTICAL	—	-	-	-	-	-	-	-	-	-	72	3'-10	288	72	3'-10	288	72	3'-10	288	72	3'-10	288
	5j8	VERTICAL		-	-	-	-	-	-	-	-	-	36	5'-0	188	36	5'-0	188	36	5'-0	188	36	5'-0	188
	6h4	LONGITUDINAL	—	-	-	-	-	-	-	-	-	-	40	7'-9	466	40	7'-9	466	40	7'-9	466	40	7'-9	466
	4t1	WING FOOTING TIE BAR		-	-	-	-	-	-	-	-	-	32	2'-2	46	32	2'-2	46	32	2'-2	46	32	2'-2	46
4 END SECTIONS	5d1	WING HORIZONTAL	—	16	6'-8	111	16	6'-8	111	16	6'-8	111	16	11'-8	195	16	11'-8	195	16	11'-8	195	16	11'-8	195
	5j4	ANCHOR TO SLAB	—	104	3'-10	416	104	3'-10	416	104	3'-10	416	104	3'-10	416	104	3'-10	416	104	3'-10	416	104	3'-10	416
	5j5	VERTICAL		48	5'-0	250	48	5'-0	250	48	5'-0	250	48	5'-0	250	48	5'-0	250	48	5'-0	250	48	5'-0	250
	5j6	VERTICAL		4	4'-11	21	4	4'-11	21	4	4'-11	21	4	4'-11	21	4	4'-11	21	4	4'-11	21	4	4'-11	21
	6h2	LONGITUDINAL	—	28	6'-8	280	28	6'-8	280	28	6'-8	280	28	6'-8	280	28	6'-8	280	28	6'-8	280	28	6'-8	280
	6h3	LONGITUDINAL		28	6'-8	280	28	6'-8	280	28	6'-8	280	28	6'-8	280	28	6'-8	280	28	6'-8	280	28	6'-8	280
	4t1	WING FOOTING TIE BAR		40	VARIES	51	40	VARIES	51	40	VARIES	51	40	VARIES	51	40	VARIES	51	40	VARIES	51	40	VARIES	51
	TOTAL LBS.					4215			4734			5444			7095			7691			8240			8752

NOTE: ALL BARRIER RAIL REINFORCEMENT TO BE EPOXY COATED IF EPOXY COATING OPTION IS USED. SEE SHEET H30SI-09-05, H30SI-16-05 AND H30SI-23-05.

CONCRETE OPEN RAIL QUANTITIES

BRIDGE LENGTH		UNIT	46'-8	55'-0	67'-6	80'-0	90'-0	100'-0	110'-0
CONCRETE BARRIER RAILING	0° SKEW	L.F.	127.3	144.0	169.0	214.0	234.0	254.0	274.0
CONCRETE BARRIER RAILING	15° SKEW	L.F.	127.5	144.2	169.2	214.2	234.2	254.2	274.2
CONCRETE BARRIER RAILING	30° SKEW	L.F.	128.3	144.9	169.9	214.9	234.9	254.9	274.9

CONCRETE PLACEMENT QUANTITIES

NOTE: THESE VALUES TO BE USED FOR ALL SKEWS.

℄-℄ ABUTMENT BEARING	46'-8	55'-0	67'-6	80'-0	90'-0	100'-0	110'-0
STANDARD SECTION CU. YD.	7.8	9.1	11.1	13.0	14.5	16.1	17.6
ABUTMENT DIAPHRAGM EXTENSION 4 @ 0.47 CU. YDS.	-	-	-	1.9	1.9	1.9	1.9
END SECTION 4 @ 0.70 CU. YDS.	2.8	2.8	2.8	2.8	2.8	2.8	2.8
TOTAL CU.YDS.	10.6	11.9	13.9	17.7	19.2	20.8	22.3

BENT BAR DETAILS

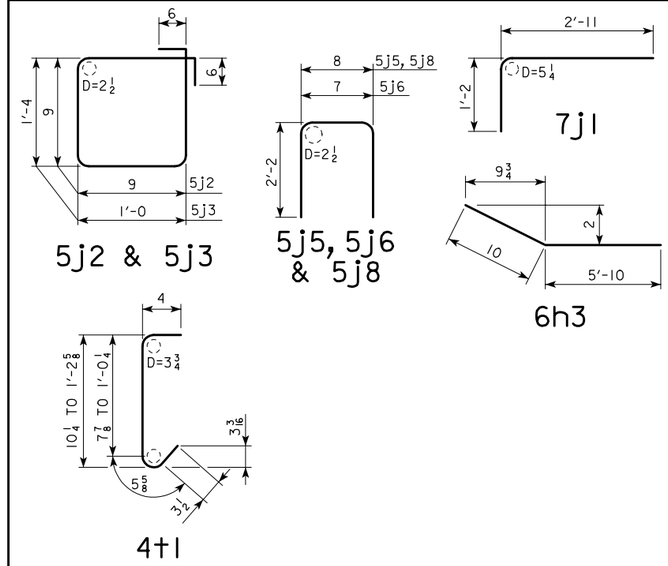

NOTE: ALL DIMENSIONS ARE OUT TO OUT.
D = PIN DIAMETER

LATEST REVISION DATE :

APPROVED BY

STANDARD DESIGN - 30' ROADWAY, SINGLE SPAN BRIDGE

PRETENSIONED PRESTRESSED CONCRETE BEAM BRIDGES

JANUARY, 2005 HS20-44 LOADING

IOWA DEPARTMENT OF TRANSPORTATION - HIGHWAY DIVISION

OPEN RAIL DETAILS
SHEET 2 OF 2

H30SI-38-05